DEPARTMENT OF THE ARMY TECHNICAL MANUAL

DEPARTMENT OF THE AIR FORCE TECHNICAL ORDER

TM 11-667
TO 16-1-284

HIGHER FREQUENCY TECHNIQUES

(EXCLUDING MICROWAVES)

DEPARTMENTS OF THE ARMY AND THE AIR FORCE
OCTOBER 1952

HIGHER FREQUENCY TECHNIQUES

(EXCLUDING MICROWAVES)

United States Government Printing Office
Washington : 1952

DEPARTMENTS OF THE ARMY AND
THE AIR FORCE
WASHINGTON 25, D. C., *1 October 1952*

TM 11-667/TO 16-1-284 is published for information and guidance of all concerned.

[AG 413.44 (17 Jul 52)]

BY ORDER OF THE SECRETARIES OF THE ARMY AND THE AIR FORCE:

J. LAWTON COLLINS
Chief of Staff, United States Army

OFFICIAL:
WM. E. BERGIN
Major General, USA
The Adjutant General

HOYT S. VANDENBERG
Chief of Staff, United States Air Force

OFFICIAL:
K. E. THIEBAUD
Colonel, USAF
Air Adjutant General

DISTRIBUTION:

Active Army:

Tech Svc (1); Tech Svc Bd (1); AFF Bd (ea Svc Test Sec) (1); AFF (5); AA Comd (2); OS Maj Comd (25); Base Comd (3); Log Comd (2); A (20); MDW (5); CHQ (2); FT (2); Sch (2); PMS & T 11 (1); Gen Dep (2); Dep (except Sec of Gen Dep) (2); Dep 11 (including Sig Sec og Gen Dep) (20); Tng Cen (2) except 11 (100): POE (3), OSD (3): Lab 11 (2): Mil Dist (3); 4th & 5th Ech Maint Shops 11 (2); Two (2) copies to each of the following T/O & E's: 11-7N; 11-15N; 11-57N; 11-95; 11-537T; 11-547; 11-617.

NG: Same as Active Army.

ORC: Same as Active Army.

For explanation of distribution formula, see SR 310-90-1.

ELECTRONIC FUNDAMENTAL SERIES

The manuals on electronic fundamentals form a progressive series of educational texts which present the theory and application of electronics for the military services. The series starts with the basic electrical fundamentals and extends to the most recent technical concepts, as applied to telegraphy, telephony, radio, loran, facsimile, radio direction finding, radar, meteorological radio, television, and other military equipments. For available manuals in the series, see SR 310–20–4.

CONTENTS

		Paragraphs	Page
CHAPTER 1.	INTRODUCTION	1–6	1
2.	DISTRIBUTED PROPERTIES—CIRCUIT ELEMENTS	7–12	9
3.	CIRCUIT ELEMENTS—LINE SECTIONS	13–20	18
4.	CIRCUIT ELEMENTS—LUMPED-PROPERTY COMPONENTS	21–29	43
5.	VACUUM TUBES—30- to 1,000-MC RANGE		
Section I.	Factors affecting tube performance	30–39	55
II.	Vhf and uhf vacuum tubes	40–44	63
CHAPTER 6.	AMPLIFIERS FOR THE 30- TO 1,000-MC BAND		
Section I.	Introduction	45–48	69
II.	Voltage amplifiers	49–52	72
III.	Power amplifiers	53–60	79
CHAPTER 7.	SPECIAL OSCILLATOR CIRCUITS	61–70	86
8.	COUPLING PRINCIPLES AND CIRCUITS	71–78	97
9.	PROPAGATION AND ANTENNAS	79–87	103
10.	HIGH-FREQUENCY RADIO-COMMUNICATIONS SET	88–95	119
INDEX		-----	126

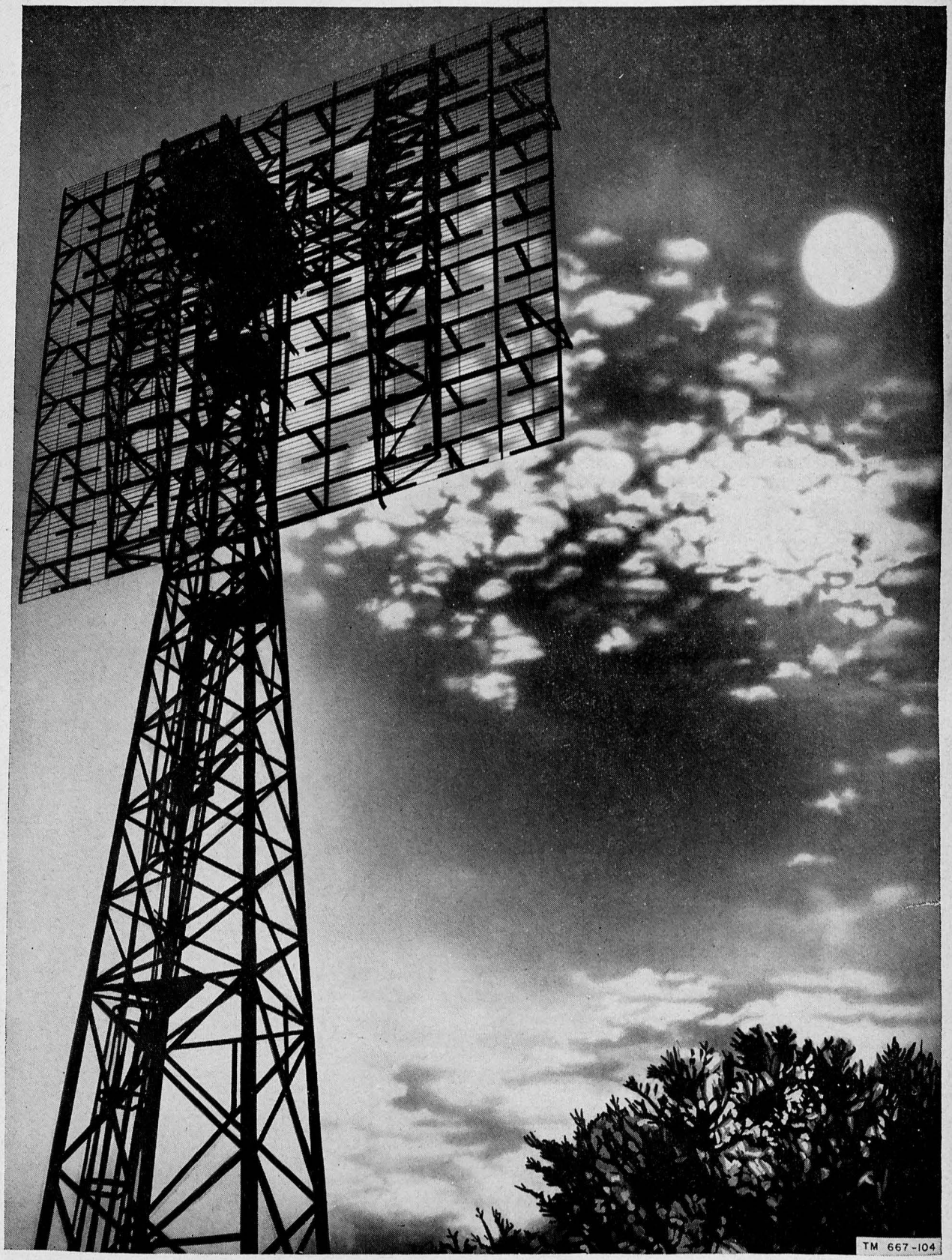

Figure 1. Signal Corps antenna array for moon contact.

CHAPTER 1

INTRODUCTION

1. General

a. The part of the radio-frequency energy spectrum covered in this manual extends from 30 to 1,000 mc (megacycles). This area includes the entire vhf (very-high frequency) band between 30 and 300 mc, and that part of the uhf (ultrahigh frequency) band extending from 300 to 1,000 mc. Utilization of this part of the radio spectrum for such purposes as communications and radar was slow because of the relative freedom from congestion in the lower frequency bands in the 1930's, the difficulty of developing efficient equipment for this frequency range, and general lack of recognition of its possibilities.

b. The great increase in congestion of the r-f (radio-frequency) channels below 30 mc and the special advantages of the shorter wavelengths in the 30- to 1,000-mc band have resulted in a rapid expansion of research and development in this part of the r-f spectrum. The actual use of these shorter wavelengths has increased to a point where it is impracticable to cover every sort of equipment in a single manual. For that reason, magnetrons, klystrons, traveling-wave tubes, and specific equipments using these devices are omitted. Even with these omissions, a large amount of information must be presented, and it will be studied more easily if the circuitry relationship between the 30- to 1,000-mc band and the parts of the radio spectrum above and below it are understood. The relationships between the type of components used in the circuits of the different frequency ranges are shown in figure 2. The upper limit for radio signals that can be returned effectively to the surface of the earth by the ionosphere is about 30 mc. Therefore, 30 mc was chosen as the low-frequency limit of this band. This 30-mc dividing line is not an abrupt one, because there is no abrupt change in the ability of the ionosphere to return the waves to earth as the frequency is increased. The change of conduct of the ionosphere takes place over a *region* of the frequency spectrum with its center at about 30 mc. The band of frequencies in which the ionosphere behavior changes occasionally moves bodily higher or lower by considerable amounts. The 1,000-mc upper-frequency limit has been selected because it is about the highest frequency at which coaxial or parallel-conductor transmission lines are practical. Above this frequency, waveguides and resonant cavities become desirable because of their greater efficiency. Again, the dividing line is not an abrupt one. The limit should be thought of as a transition region, centering on about 1,000 mc.

2. Need for Vhf and Uhf Radio

a. Congestion on Lower Channels. The rapid expansion of radio broadcasting and communications created the serious problem of interference between stations. To alleviate this situation, the governments of various countries have held many conferences since 1903, when they first reached an international agreement relative to the assignment of radio-frequency channels for various radio services. The field of radio increased rapidly and by the early 1930's the radio channels between the lowest practical frequency (about 15 kc (kilocycles)) and the highest frequencies that had proved useful for long-distance communication were so congested as to hamper their usefulness. Thus the radio industry, radio amateurs, and various government and military agencies were stimulated to explore the region above 30 mc. In the early 1920's, a great amount of the experimental work on the higher frequencies was done by amateurs. From the earliest days of radio, many prominent men, including Lee De Forest and Hiram Percy Maxim, have been active radio amateurs as well as professional engineers and scientists. This trend continues in the present-day amateur fraternity, which numbers almost

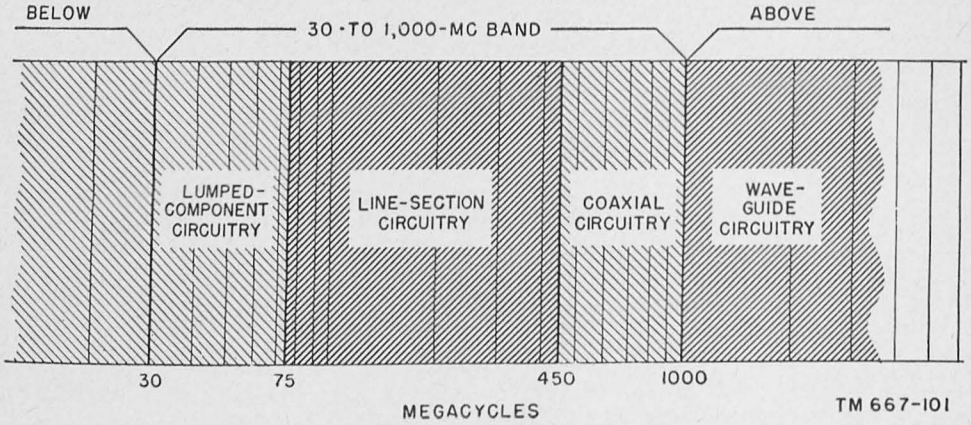

Figure 2. Radio-frequency spectrum.

100,000 licensed members in the United States alone.

b. Special Advantages of Shorter Wavelengths. In addition to the problem of congestion, certain natural characteristics of radio waves also encouraged experimenters to study the part of the r-f spectrum above 30 mc.

(1) At 30 mc and above, the ionosphere does not return radio waves to the surface of the earth very effectively, except under rather unusual conditions. At first this was considered a serious limitation since most of the emphasis in early radio development was on long-distance communication, far beyond the optical horizon (line of sight). It soon was realized that the shorter wavelengths, above 30 mc, could be used for covering relatively local areas. This freed some additional lower frequencies for long-distance communication. Because propagation of these shorter radio waves did not reach points on the surface of the earth beyond the optical horizon as seen from the transmitting antenna, stations could operate on the same assigned frequency without interference, if they were separated far enough geographically. This principle already was being used on the broadcast band (540 to 1,600 kc), and other radio services operating in the region above 30 mc. Figure 3 shows a handy-talkie designed to operate at 50 mc. This provides reliable short-range communication.

(2) A second effect of the decrease in wavelength as the frequency is increased is connected with the phenomenon of radio-wave reflection. All electromagnetic waves, such as radio, light, and heat, can be reflected, but how well they are reflected depends on a number of different factors. One factor is the relationship between the length of the wave considered and the physical size of the reflecting object. In general, an object must be a reasonable fraction (1/10 to 1/5) of a wavelength long in one dimension to reflect radio waves effectively. Objects of one or more electrical half-wavelengths reflect best if other factors are equal. Therefore, the shorter the wavelength, the smaller the object that can reflect the waves effectively. For example, a wave 10 meters long will be reflected readily from objects that would have little effect on a wave 100 meters long. Similarly, waves 1 meter long are reflected readily from objects the size of a car or an airplane. This is one of the basic principles on which radar operates, and its importance hardly can be exaggerated. Since many of the objects it is desired to detect with radar are under 5 to 10 meters in length, radio wave 5 meters or less in length will be more effective in detecting them than longer waves. Actually, most radar equipment uses wavelengths much shorter than 5 meters, ranging down to 1 centimeter or less. Earlier

Figure 3. Handy-talkie radio set.

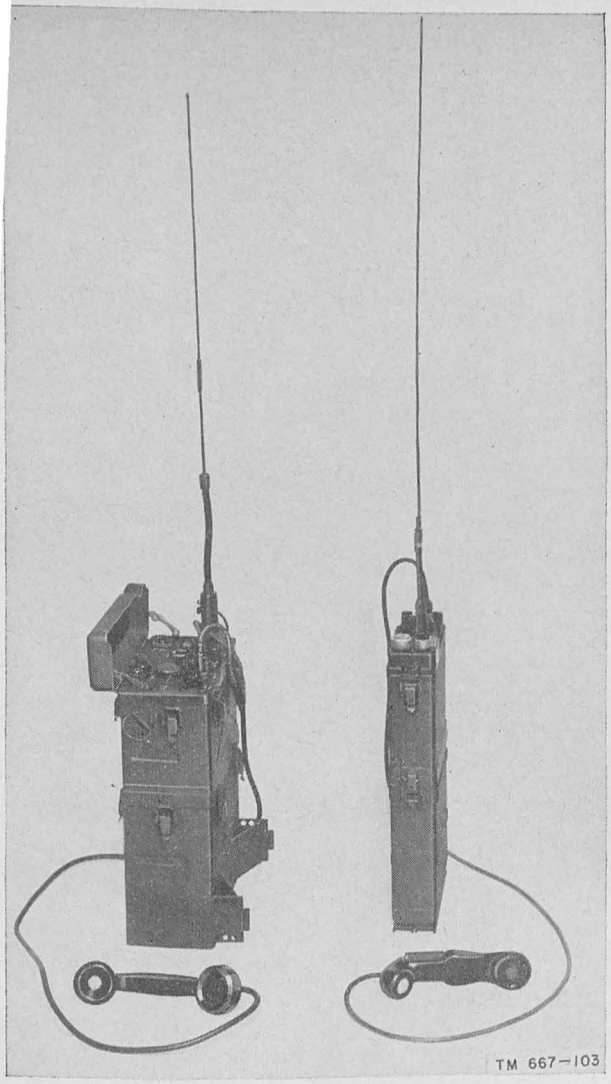

Figure 4. Walkie-talkie radio set.

equipment used wavelengths up to 10 meters, and much of the radar used in World War II operated at about 500 mc, a wavelength of 0.6 meter.

(3) Another factor directly related to the wavelength is the physical size of the equipment used to generate the r-f energy, and the antenna needed to radiate it effectively. Both of these factors can be made smaller in direct proportion as the wavelength is made shorter. For example, a half-wave antenna for a station operating in the broadcast band requires a steel tower hundreds of feet high, but at 500 mc an aluminum rod 30 centimeters long is sufficient. Obviously, equipment for the shorter wavelengths can be made more compact and portable because of this relationship between physical size and wavelength. At the lower frequencies in the 30- to 1,000-mc band, the Army walkie-talkie equipment (fig. 4) containing a transmitter, receiver, and an antenna is small enough to make it easily portable, and equipment for the higher frequencies can be made much smaller. This relationship between wavelength and physical size makes possible the construction of relatively small antennas capable of concentrating the radiated waves into a sharp, narrow beam. The beam, which can be pointed in a desired direction by properly positioning the antenna, aids communication in the desired direction and reduces interference to stations in other directions.

3. Historical Background

The events in the radio field that brought about the development of equipment and techniques for use above 30 mc are of considerable interest and are an aid to understanding this part of the radio spectrum, and its practical uses. Intensive large-scale research and experimentation did not begin until about 1935, although small projects not regarded as of major importance had been undertaken earlier by isolated experimenters. The original experiments of Heinrich Hertz in 1888, which demonstrated that radio waves were a physical reality, as suggested by Maxwell's equations, were made at frequencies near 100 mc. Marconi's first successful demonstration of long-distance transmission across the Atlantic in 1901, however, was made on a relatively low frequency. Marconi's success caused most radio researchers to concentrate on the lower frequencies until the development and use of the vacuum tube had progressed to a point where voltage, or power amplification and generation of higher-frequency radio energy, became relatively easy.

a. Early History. As the lower-frequency bands became more crowded, and the nature and characteristics of radio waves more familiar, experimenters began investigating the shorter wavelengths. Before 1930, Dr. A. Hoyt Taylor and his assistant, Leo C. Young, experimented with wavelengths between 20 and 5 meters (15 to 60 mc) for possible use for direction-finding purposes. During these experiments, they observed that

radio waves of suitable wavelength could be reflected from aircraft. It was partly as a result of their research that investigation was begun of this reflection phenomenon, later developed into radar. Many amateurs carried on experimentation in the assigned amateur bands at 56 and 112 mc in the middle and late 1920's. By 1934, their work had demonstrated that reliable communication on such frequencies, using low power and physically small antennas, was practical over distances up to 50 or 60 miles. Shorter wavelengths were being studied in many foreign countries, but it was not until the possibility of a detection and ranging device (radar) became apparent that large-scale organized research began in earnest. This possibility, which had been suggested earlier in the experiments of Hertz, occurred to radio researchers of several nations in the middle 1930's. A radio method of locating objects was being tested in Japan, England, France, Germany, and the United States. Since the use of relatively short waves was highly desirable, because of the relationship between the length of the wave and the size of the reflecting object, many of these experiments were being carried on at wavelengths ranging from 15 meters down to 1 or 2 meters.

b. Military Research. In the Signal Corps, experimentation with short wavelengths began as early as in any other agency, and by 1936 a radar system capable of detecting echoes from commercial aircraft had been developed in the Signal Corps Laboratories at Fort Monmouth, N. J. In February 1937, a successful radar was demonstrated to Admiral William D. Leahy, then Chief of Naval Operations, by personnel of the Naval Research Laboratory. This radar, operating on a wavelength of about 1½ meters, was considerably improved during the following months, and in 1938 was installed on the U. S. S. *New York* for sea tests. In May 1937, a successful demonstration in detecting approaching bombers was conducted at Fort Monmouth for the Secretary of War and members of Congress. For experimental communications between surface stations and aircraft, frequencies above 30 mc had been used with moderate success for some time. For various technical reasons, both Army and Navy research was concentrated on the use of shorter wavelengths. It is interesting to note that, although later radar developments extended to wavelengths as short as 1 centimeter, the Signal Corps radar which made the first radar contact with the moon on 10 January 1946, used a wavelength of about 2.9 meters. The antenna for this radar is shown in figure 1.

c. Commercial Developments. The research done by the large communications companies in the frequency region above 30 mc was devoted principally to developing components and equipments for communication and some navigation and direction-finding devices, particularly for aircraft. A great many experiments were also carried out to determine the reliable range and other characteristics of communication on frequencies above 30 mc. The essential line-of-sight nature of propagation at these frequencies was apparent almost from the start, but much more has been learned about the effects of weather and terrain, maximum power requirements, and similar information. Research in radar also was conducted intensively by the laboratories of the large communications companies, partly under contract with various government agencies, and partly independently. Much of this research was devoted to developing equipment that could be produced in large quantities for the Armed Services. The needs of the services fell roughly into two general categories—communication equipment and radar. The essential difference between the developments for communications purposes and those for radar is the greater power output required during the transmission of the radar pulse. Tubes and other components capable of handling large amounts of power for small fractions of a second were needed in radar transmitters, and there was also great need for compact, lightweight, portable equipment for field troops, surface vehicles, and aircraft. These considerations also encouraged the trend toward the shorter wavelengths wherever their propagation characteristics permitted.

d. Broadcasting on VHF. In addition to the development of communications equipment, two other commercial radio services were moving rapidly into the frequency region above 30 mc. These developments were f-m (frequency-modulation) and television. Nothing in the basic nature of either of these systems prevents its operation at lower frequencies than 30 mc. However, the bandwidth required, the congestion in the lower frequency channels, and the geographical area to be covered have resulted in the assignment of this frequency band to the broadcasting services. In general, the areas to be covered are the principal

cities and the heavily populated districts around them, up to an extreme radius of 60 to 80 miles. Such areas can be covered by broadcasting services operating in this frequency band. The field strength necessary at the receiving point for such entertainment broadcasting service is from 10 to 100 times greater than that required for adequate radio communications service. Development and expansion of f-m and television broadcasting added another incentive to the development of components and circuits for use in the 30- to 1,000-mc band, because of the need for adequate transmitter power and relatively good-quality receiving equipment that could be mass-produced at moderate cost.

e. More Recent Developments. Much of the actual research done during World War II still is regarded as confidential, but it can be said generally that steady progress has been made in refining and improving components, circuits, and techniques for use in the 30- to 1000-mc frequency region, both for commercial and military purposes. Many large-scale radio communications services now are operating on a continuous basis in this frequency band, and the higher frequencies extending from 1,000 to at least 30,000 mc are widely used also. Frequencies for these services have been assigned by the Federal Communications Commission, as shown in table I. This table lists only the general class of service in which the assigned frequency band is to be used. A complete listing of the various subdivisions of each general class would require an excessive amount of space.

Table I. Commercial and Military Frequencies Assigned by FCC

Frequency band in megacycles	General class of service	Types of stations
30.00 to 30.56	Fixed and mobile	U. S. Government radio stations.
30.56 to 32.00	Land mobile	Special industrial, truck and bus, urban transit, and forestry conservation communication systems.
32.00 to 33.00	Fixed and mobile	U. S. Government radio stations.
33.00 to 34.00	Land mobile	Highway maintenance, fire departments, petroleum companies, low-power industrial systems.
34.00 to 35.00	Fixed and mobile	U. S. Government radio stations.
35.00 to 36.00	Land and maritime mobile	Low-power industrial, maritime-mobile, automobile, highway-truck, telephone-company vehicles.
36.00 to 37.00	Fixed and mobile	U. S. Government radio stations.
37.00 to 38.00	Land mobile	Police departments, power companies, highway maintenance departments.
38.00 to 39.00	Fixed and mobile	U. S. Government radio stations.
39.00 to 40.00	Land mobile	Police departments.
40.00 to 42.00	Fixed and mobile	U. S. Government radio stations. Industrial, scientific, and medical apparatus.
42.00 to 50.00	Land mobile	Police, fire, highway departments, urban and interurban bus systems, petroleum, telephone, and power companies.
50.00 to 54.00	Amateur	Licensed amateur radio stations.
54.00 to 72.00	Broadcasting	Television stations, channels 2, 3, and 4.
72.00 to 76.00	Fixed, and air navigation beacons	Airfield and airways marker beacons, private systems not open to public correspondence.
76.00 to 88.00	Broadcasting	Television broadcasting channels 5 and 6.
88.00 to 108.00	Broadcasting	Frequency-modulation broadcasting stations.
108.00 to 118.00	Air navigation aids	Radio beacons and other radio aids to air navigation.
118.00 to 132.00	Aircraft mobile	Airport control, emergency, private aircraft, flight test, and utility.
132.00 to 144.00	Fixed and mobile	U. S. Government radio stations.
144.00 to 148.00	Amateur	Licensed amateur radio stations.
148.00 to 152.00	Fixed and mobile	U. S. Government radio stations.
152.00 to 162.00	Land and maritime mobile	Same general classes of stations as 35.00 to 36.00-MC band.
162.00 to 174.00	Fixed and mobile	U. S. Government radio stations.
174.00 to 216.00	Broadcasting	Television broadcasting, channels 7 to 13, inclusive.
216.00 to 220.00	Fixed and mobile	U. S. Government radio stations.
220.00 to 225.00	Amateur	Licensed amateur radio stations.
225.00 to 328.60	Fixed and mobile	U. S. Government radio stations.

Table I. Commercial and Military Frequencies Assigned by FCC—Continued

Frequency band in megacycles	General class of service	Types of stations
328.60 to 335.40	Radio aids to air navigation	Glide-path radio transmitters.
335.40 to 400.00	Fixed and mobile	U. S. Government radio stations.
400.00 to 406.00	Radio aids to meteorology	Radiosonde equipment.
406.00 to 420.00	Fixed and mobile	U. S. Government radio stations.
420.00 to 450.00	Amateur	Licensed amateur radio stations.
450.00 to 460.00	Land mobile	Industrial plants, forest conservation, taxicab, highway maintenance, railway, police, emergency, and broadcasting station remote pick-up.
460.00 to 470.00	Land fixed and mobile	Citizens radio equipment.
470.00 to 890.00	Broadcasting	Television broadcasting stations.
890.00 to 940.00	Broadcasting and fixed, I. S. M	Developmental broadcasting and fixed private systems; industrial, scientific, and medical equipment.
940.00 to 952.00	Fixed	F-M broadcasting studio-to-transmitter link.
952.00 to 960.00	Fixed	Fixed stations used for remote control purposes.
960.00 to 1215.0	Radio aids to air navigation	U. S. Government and other radio aids to navigation.

4. Scope of Manual

The information covered in this manual is arranged in a sequence that will make study and understanding relatively easy for personnel familiar with fundamental radio theory and practice. New information pertaining to the higher-frequency range, presented in chapters 1 through 5, must be understood before its applications in practical circuits can be studied effectively.

a. Only two basically new ideas are involved in considering the 30- to 1,000-mc frequency band, as compared with radio phenomena at lower frequencies.

(1) At 30 mc and above, radio waves propagated through the atmosphere are not effectively returned to the surface of the earth by the ionosphere under usual conditions. This limits the effective range of radio communication in this frequency band to points on the surface of the earth not far beyond the optical horizon, as seen from the transmitting antenna.

(2) As the frequency is increased through the 30- to 1,000-mc range, the physical length of radio waves becomes more and more closely comparable to the physical size of common objects, particularly the component parts of practical radio equipment.

b. The detailed material in the chapters that follow is arranged in sequence, beginning with information on the fundamental differences between the behavior of radio waves in this frequency range, and the reasons for the differences.

(1) The distributed properties of inductance, capacitance, and resistance associated with any conductor are discussed first, because their effects must be understood before the action of radio circuits at these frequencies can be comprehended. In particular, this manual discusses the effects of the distributed properties of inductance, capacitance, and resistance in the connecting leads used in radio circuits, and in sections of transmission lines. These effects are the principal reason for the physical differences between equipment operating in this frequency range and the more familiar circuits used at lower frequencies.

(2) It also is necessary to understand the changes that occur in the behavior of lumped-property components, such as inductors, capacitors, resistors, and vacuum tubes, when they are operated in the 30- to 1,000-mc region. The differences in design of components meant for operation in this frequency band are compared with the more familiar lower-frequency components.

(3) In considering the design and performance of practical circuits utilizing the principles and components mentioned above, emphasis is placed on the differences made necessary by much shorter

wavelengths. The underlying reasons are shown for special physical configurations of circuit elements necessary for efficiency and stability.

(4) For practical use of radio-frequency energy for communication, radar, or other purposes, it must be understood that the propagation of radio waves through the atmosphere is very different in the 30- to 1,000-mc band from propagation at lower frequencies, and the differences are extremely important. The physical causes for the differences are explained, and consideration is given to antennas for transmitting and receiving.

c. In an effort to prevent misconceptions, certain terms have been decided upon which may not agree with the generally accepted use of the word or phrase in other radio literature. An example of such a term is use of *property* instead of the more generally used *constant*, when discussing inductance, capacitance, and resistance, particularly as they exist distributed along conductors (par. 7*a*). This is to avoid the suggestion of fixed, unvarying values of effective inductance, capacitance, and resistance, which is implied by the word *constant*, as used in many technical books. The effective values of these electrical properties *do* change somewhat with frequency, although the rate of change usually is small, and often can be neglected over a considerable frequency range. At frequencies in the 30- to 1,000-mc range, however, the change in these properties with frequency cannot be neglected.

5. Summary

a. The uhf band covers the frequency range from 300 to 3,000 mc.

b. The range of frequencies from 30 to 1,000 mc covers portions of the vhf and uhf bands.

c. The 30- to 1,000-mc band of frequencies was developed because of its relative freedom from congestion, the wider frequency bands required by f-m and other equipments, and the excellent reflection qualities of the shorter wavelengths.

d. The frequency of 30 mc was chosen as the lower limit of the frequency band covered in this text because it is the upper limit for radio signals that can be returned effectively to the surface of the earth by the ionosphere.

e. The upper limit of 1,000 mc was chosen because it is about the highest limit at which coaxial or parallel-conductor transmission lines are practical.

f. Propagation of the shorter waves is limited to line of sight as seen from the transmitting antenna.

g. Radio, light, and heat waves are electromagnetic in nature and can be reflected from objects.

h. An object must be a reasonable fraction of a wavelength in one dimension ($1/10$ to $1/4$) to reflect radio waves effectively.

i. Objects of one or more electrical half-wavelengths reflect best if other factors are equal.

j. The shorter the wavelength, the smaller the object that can reflect radio waves effectively.

k. Most radar equipment uses wavelengths much shorter than 5 meters, ranging down to 1 centimeter or less.

l. Antennas used on higher frequencies decreased in physical size as frequency increases.

m. At the higher frequencies it is possible to construct relatively small antennas, capable of concentrating the radiated waves into a sharp narrow beam.

n. This aids communication in the desired direction and reduces interference to other stations in other directions.

o. The original experiments that demonstrated that radio waves were a physical reality were made at frequencies near 100 mc.

6. Review Questions

a. Is the lower limit of the 30- to 1,000-mc band an abrupt dividing line? Explain.

b. What is meant by the optical horizon?

c. Does the ionosphere return radio waves to the earth at 500 mc?

d. What area will the shorter wavelengths above 30 mc cover?

e. What is meant by reflection of radio waves?

f. Would a wavelength of ½ meter reflect from a car or an airplane more readily than one of 10 meters? Explain.

g. What is the range of frequencies used for radar equipment?

h. What is the relationship between wavelength and physical size for antennas?

i. What effect does beaming an antenna have on communication?

j. At what frequency was the radar operated that first made contact with the moon?

CHAPTER 2

DISTRIBUTED PROPERTIES—CIRCUIT ELEMENTS

7. Introduction

a. Definition. Distributed properties may be defined as the inductance, capacitance, and resistance uniformly spread along each unit length of any circuit element or conducting linkage, *plus* the inductance, capacitance, and resistance existing from each conductor to ground and to other objects. For example, a ¼-inch rod of pure copper, 4 inches long, placed in free space where *no outside influence could act upon it*, would be found to possess small but definite values of inductance, capacitance, and resistance. If the conductor were cut in two, each part would possess exactly half the values previously found. In other words, the distributed properties are *uniform* as long as the conductor itself remains uniform in cross-sectional size, shape, and conductivity, and where no external influences exist. If the conductor is not uniform, the distributed properties still exist, but their distribution is not uniform. When a conductor is placed in an actual circuit, it possesses these *self-contained* distributed properties and *may or may not* possess additional distributed properties caused by its proximity to ground and to other conductors in the circuit. Distributed properties exist in *all* conductors and conducting surfaces, even in the leads and other parts of the conventional *lumped-property* circuit elements, which are manufactured to provide definite, easy-to-use amounts of the properties. When used in practical circuits at 30 mc and higher, however, the distributed properties of inductance, capacitance, and resistance in a given conductor actually are not fixed amounts or *constants*, but slowly change in value as the frequency changes. The term *distributed properties* therefore is used throughout this manual in preference to the term distributed constants, although many textbooks use the latter.

b. Cause. At frequencies below 30 mc it is practicable to ignore distributed, or stray, circuit properties, except in circuits such as resonant sections of transmission lines or antennas. In and above the 30- to 1,000-mc frequency range, the effects of distributed properties upon practical circuits can no longer be neglected, because of the relationship between the physical size of the circuit components and connections and the wavelengths. At 3 mc, for instance, one wavelength is 100 meters long, in comparison with which a 6-inch length of wire is very short. When the wavelengths become relatively short, as the frequency increases, it becomes physically impossible to scale down the parts of the electronic circuit and keep them small in relationship to wavelength. Even where such a size reduction is possible, the power-handling ability of the circuit is reduced in proportion. As a result, much of the usefulness of the device is lost.

c. Importance. When the operating frequency increases, the various losses that lower circuit efficiency increase, making it desirable to use circuit arrangements and elements which have lower *built-in* losses. It has so far been found impossible to construct lumped-property elements that are *pure* and do not contain small distributed values of the other two properties. As the working frequency is increased, the effects of the unwanted distributed properties cause increased losses, with the result that the efficiency drops. In circuits having distributed properties, losses are lower than in the same circuits constructed of lumped-property elements, because it is possible to use conductors of proper size and shape to minimize r-f resistance and the dielectric is usually air. The result is that better circuit stability and efficiency are achieved by using the distributed properties.

8. Distributed Inductance

a. General. The term distributed inductance refers to the self-inductance distributed along the length of *any sort of conductor*, whether or not it is meant to act as an inductor. Inductance is

defined as the property of a conductor that tends to oppose any *change* of electron flow through the conductor. Inductance reveals itself only when current (electron flow) is varying in the conductor; a back emf (electromotive force) is induced in a direction which tends to oppose the change in current flow. Figure 5 shows a cross-sectional view of a piece of straight wire carrying an alternating current. Dividing the cross section into parts 1, 2, and 3 and assuming that the parts carry exactly equal quantities of current, the action is stopped at an instant when the current in the conductor is increasing in the direction indicated. The magnetic field about the conductor is expanding or moving outward and is made up of flux lines contributed by parts 1, 2, and 3. Since the lines of force created by current in 1 move outward, they must cut the conductor at both 2 and 3. The result is the same as that when any conductor is cut by lines of force; a back emf is induced that tends to oppose the increase in current. An instant later, when the current passes maximum and begins to decrease, the field starts to collapse. Again, flux lines from 1 cut 2 and 3, inducing an emf in the opposite direction which tends to oppose the decrease in current. It is apparent that even a very short section of straight wire possesses self-inductance. The conductor does not have to be wire, however; it can be *any* conductor, any shape or size. This is the underlying physical reason *for the definite value of inductance which is present wherever a varying electric current flows.* The actual amount of self-inductance is usually small, but its effect becomes important at frequencies above 30 mc. The effect may be desirable or unwanted but it cannot be ignored. A complex equation is used to find the actual value of self-inductance, but the fact of importance here is that the value depends directly on the number of flux lines surrounding the conductor. Note that more flux lines surround 1, the center of the conductor, than either 2 or 3, and that 3, the outside, is surrounded by the least amount of flux. Self-inductance is highest at the center of any conductor carrying a-c (alternating current) and tapers off toward the outside surface; this is the cause of *skin effect.* Distributed inductance usually has a higher Q ratio of reactance to resistance than a lumped-property inductor because the capacitance associated with a conventional coil is much lower.

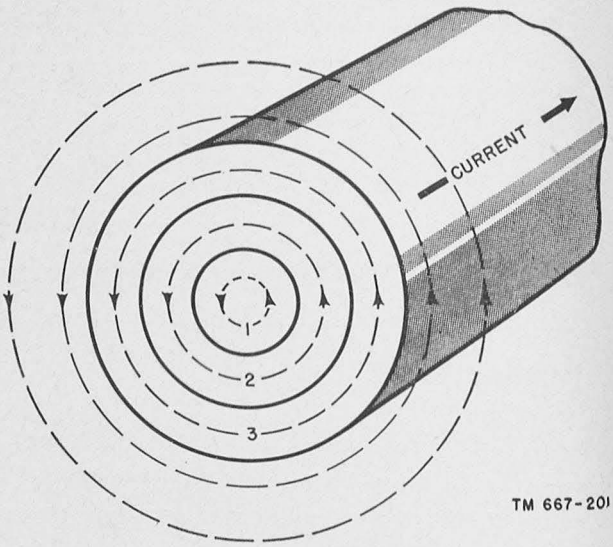

Figure 5. Magnetic field about straight conductor carrying a-c current.

b. Undesirable Effects. The property of distributed inductance can cause serious r-f losses if leads and connecting linkages are not kept as short as possible. Figure 6 demonstrates how this loss takes place. The plate tank circuit, A, is designed to operate at a frequency of 4 mc with a Q of 15. The lumped-property inductor is connected to the tube plate by a 4-inch length of #20 wire having a self-inductance of approximately .1 μh (microhenry). Ignoring loading and other factors, calculation shows that the resistive impedance offered by the tank circuit at resonance is 4,710 ohms, whereas the inductive reactance ($X_L = 2\ \pi fL$) of the connecting wire is approximately 2 ohms, and is so small in proportion to 4,710 ohms that it can be neglected at this low frequency. When the operating frequency is raised to 100 mc, the inductance of the tank coil must be reduced to resonate at the higher frequency, B. At 100 mc, the self-inductance has decreased slightly and, if the tube-plate lead remains 4 inches long, its inductive reactance is 59.6 ohms. The resistive impedance of the tank circuit is still 4,710 ohms at resonance and, therefore, a voltage-divider effect occurs, which prevents the entire r-f signal output of the tube from being impressed across the tank circuit and results in a loss of gain. In addition, the introduction of an inductive component causes a phase lag which is undesirable in certain applications. At higher frequencies, the effect becomes even more pronounced, introducing larger losses. *The*

smallest amounts of distributed inductance associated with the shortest possible leads, such as tube pins, cannot be neglected at frequencies above 30 mc. The tank circuit inductance *must* be made smaller as the frequency is increased, but tube pins and other current-carrying leads cannot be reduced in the same proportion.

c. Desirable Effects. In certain circuits, a condition of series or parallel resonance is desired and the property of distributed inductance, distributed capacitance, or a combination of both, may be used to achieve this. For example, to provide a bypass for signal voltages from the low-impedance end of an i-f tank circuit back to the cathode of the tube, a series-resonant circuit offers the lowest impedance path (Z=R). When the i-f frequency is above 30 mc, it is possible to get the effect of series resonance by cutting the leads of a lumped-property capacitor to lengths which offer the necessary series inductance. This is shown in A and B of figure 7. Note that the capacitance is lumped, but the inductance is the *distributed* inductance of the capacitor leads. However, the signal voltage sees a certain value of each property, *regardless of whether the properties are lumped, distributed, or any combination thereof.*

d. Inductive Coupling. When a conductor or a wire carrying alternating current runs sufficiently close to another conductor, its magnetic field induces an electromotive force in the second conductor which causes a current to flow. This is the effect of *mutual inductance.* The study of mutual inductance and coupling at lower frequencies usually is restricted to coils and transformers, but above 30 mc the effect of coupling between two

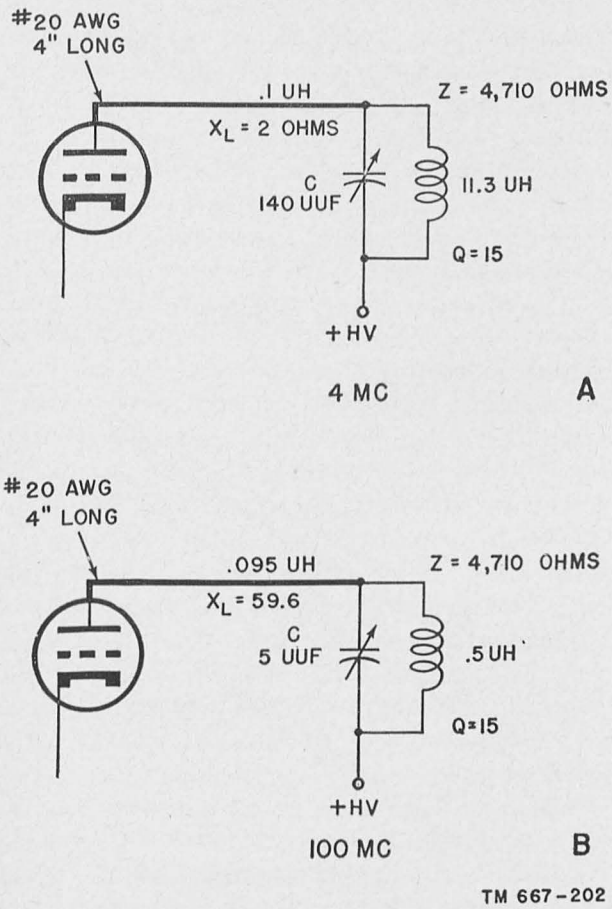

Figure 6. Effect of distributed inductance at higher frequencies.

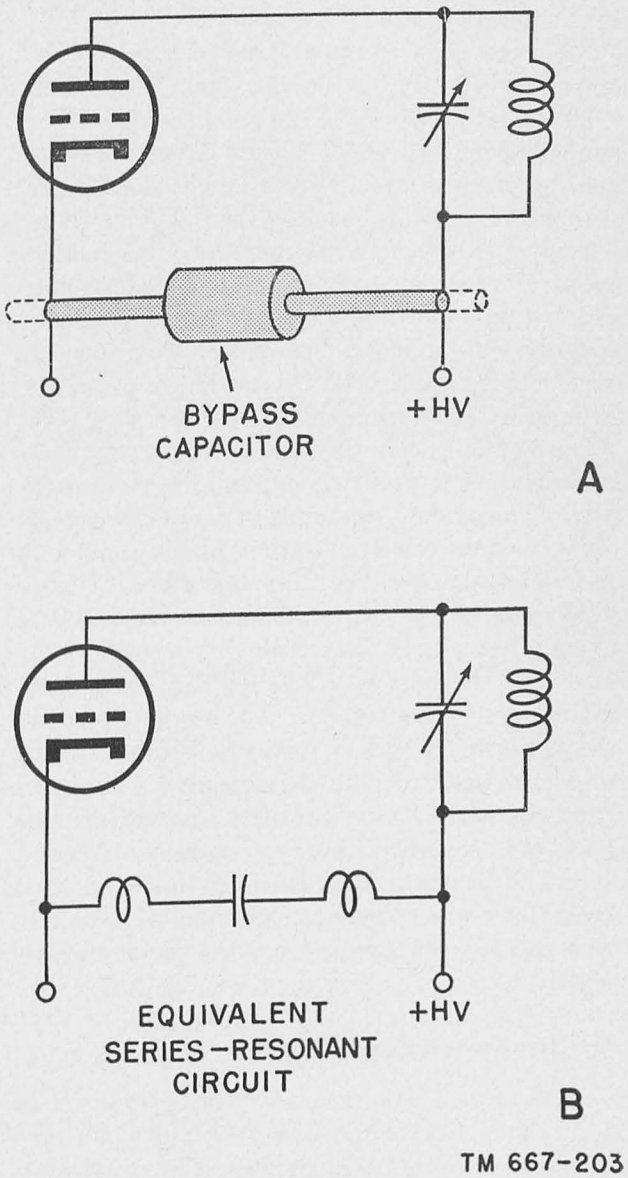

Figure 7. Series resonance lumped capacitance and distributive inductance.

conductors, even two straight pieces of wire, becomes important. This is true because the amount of coupling or mutual reactance between two inductors increases as the frequency is increased if the physical relationship remains the same. Transferring energy from one circuit to another is achieved by means of mutual inductance in the 30- to 1,000-mc range, but distributed inductances seldom are used. Even when coupling to resonant line sections, the coupling *link* generally is small enough to be considered a lumped inductor and the coupling effect is not distributed along the whole line section but appears at a high-current, low-impedance point. Some effects of coupling between distributed inductances are undesirable. For instance, if the grid and plate leads of a single-tube amplifier stage are permitted to run close to each other, signal energy from the plate circuit may be coupled back to the grid, causing either regeneration or degeneration. Distributed capacitance also will be present, but only the inductive coupling effect is considered at this time. As another example, a current-carrying wire may be too near a tube shield, inducing an emf that causes current to flow in the shield. This current flow through the shield resistance is an I^2R power loss which can be supplied only from the current-carrying wire. When inductive coupling causes circuit unbalance or power loss, it usually is spoken of as *stray coupling*. The amount or degree of coupling depends directly on the relative positions of the conductors as well as their distance from each other. Figure 8 shows the effect of physical position on the degree of coupling. In A, the coupling is loose, since the leads are crossing at a 90° angle, and the least mutual inductance results. The coupling between the wires in B and C increases because of the greater amount of mutual inductance. Practical circuits are laid out with the shortest possible leads, well separated from each other and distant from the chassis and shields. If two wires must cross, they should cross at right angles, because in this manner the smallest mutual inductance results.

9. Distributed Capacitance

a. General. The term *distributed capacitance* refers to the capacitance between any point on a conductor and all surrounding objects. Capacitance exists between any two points which are or can be at different electrical potentials. This is true whether the points of different potential are

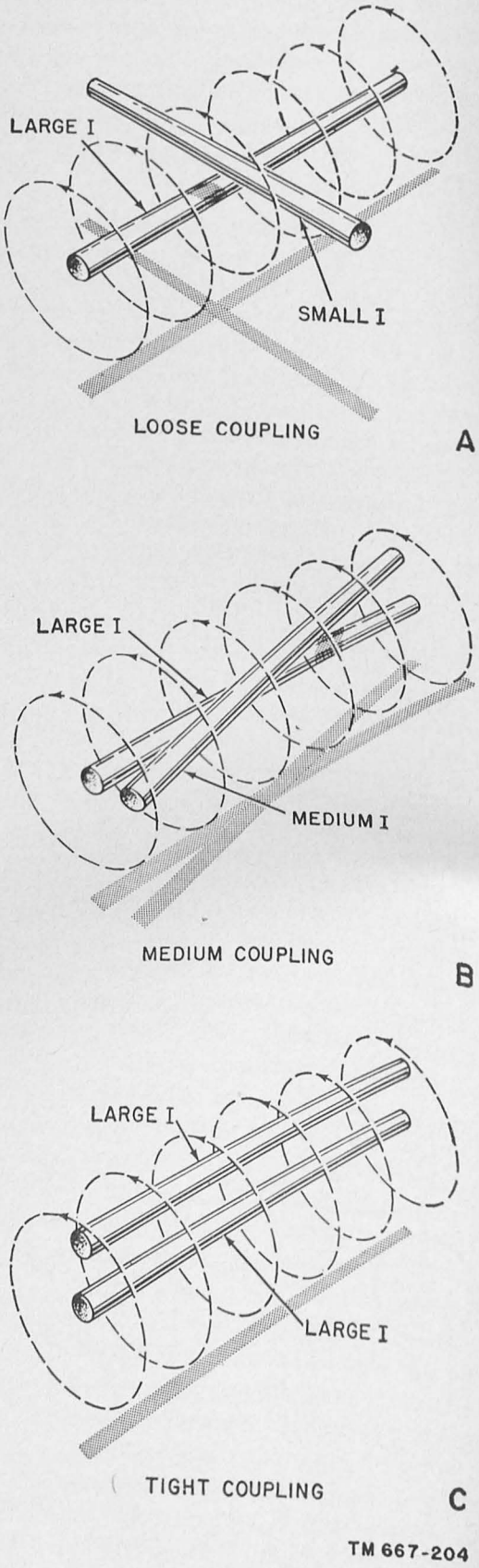

Figure 8. Coupling effects at higher frequencies.

in different conductors or in the same conductor. Although the self-capacitance of a conductor is of relatively little importance, except in special circuits, the effect of the capacitance between two conductors must be taken into consideration at frequencies above 30 mc. This is because of the distributed capacitance that exists between the parts of lumped-property circuit elements and the electrodes of vacuum tubes, as well as between leads and switch contacts. The actual value of distributed capacitance changes only slightly with frequency, but the *reactance* changes greatly. The formula for capacitive reactance,

$$X_C = \frac{1}{2\pi fC},$$

shows that, if the value of capacitance remains the same, increasing the frequency causes the capacitive reactance to *decrease*. Therefore, a small value of distributed capacitance at the lower frequencies will offer a high reactance to the flow of a-c, but at a frequency above 30 mc it will offer a lower reactance. This effect often is undesirable when it occurs accidently between two conductors in a circuit, but may be used deliberately to achieve series or parallel resonance in resonant line sections. The losses in distributed capacitance are lower than those in lumped capacitors because the dielectric is usually air, rather than a solid, and because the r-f resistance and distributed inductance values are smaller.

b. Undesirable Effects. An example of the manner in which distributed capacitance may upset the proper operation of a circuit is shown in figure 9. Assume that C_d represents a distributed, or stray, capacitance of 1 $\mu\mu$f (micromicrofarad) appearing between ground and the lead from the coupling capacitor to the grid of tube V_2. The stray capacitance, C_d, effectively shunts the 5,000-ohm grid impedance, Z_g. If an r-f signal voltage at a frequency of 2 mc is traveling from the tank circuit of V_1 to the grid of V_2, the 1-$\mu\mu$f distributed capacitance offers a capacitive reactance of 79,618 ohms to the signal. This value is so high in relation to Z_g that its effect is negligible at this and similar low frequencies. If, however, a 100-mc signal voltage is coming from the tank circuit of V_1, the same 1-$\mu\mu$f stray capacitance offers only 1,592 ohms of capacitive reactance. Now, the signal voltage sees a relatively low-impedance path across the stray capacitance, offering less than one-third the opposition of the grid impedance, Z_g. Therefore, more than two-thirds of the signal voltage is shunted across this path and lost. If the frequency of the signal voltage is increased to 400 mc, the reactance drops to 398 ohms, and only a very small amount of the signal voltage reaches the grid impedance. In many circuits, Z_g will be a tuned L-C (inductance-capacitance) combination and the grid-cathode capacitance of V_2 as well as of C_d are shunted across it. The effect of this additional capacitance is to change the resonant frequency of the tuned grid circuit. It may be possible to retune the circuit with the variable capacitor but, if this cannot be done, the only way to achieve resonance is by reducing the lumped inductance, which changes the L-C ratio and the Q. The value of distributed capacitance between any two conductors depends on the effective area of the surfaces, the spacing between them, and the potential difference. To keep the stray capacitance at a minimum, the circuit wiring is kept well spaced, with short leads which run at right angles to each other whenever possible.

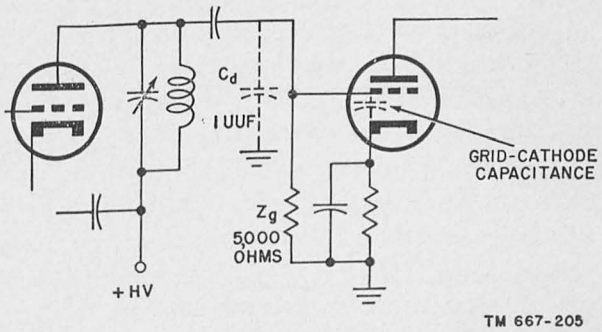

Figure 9. Effect of distributed capacitance at higher frequencies.

c. Desirable Effects. For certain applications, such as i-f amplification, a parallel L-C circuit, resonant at a single frequency, is useful. An inexpensive and simple way of achieving this is to wind a coil in such a manner that the total distributed capacitance is used to make the coil self-resonant at the desired frequency. Where the intermediate frequency falls in the 30- to 1,000-mc range, this is done easily, and coils of this type are found in some radar receivers wherein the intermediate frequency may be over 200 mc. A of figure 10 shows the distributed capacitance which exists because of the difference of potential between adjacent turns of any coil. The sum of these small values is shown in B as an effective

value of capacitance in shunt with the lumped inductance of the coil. Although most inductors are wound to minimize the distributed capacitance, it is possible to design one that offers the necessary capacitance to provide a desired L-C ratio. In addition, the Q of the circuit will be higher because of the higher L-C ratio of the coil. Therefore, the response of the tuned circuit is sharper than it could be with lumped-property elements.

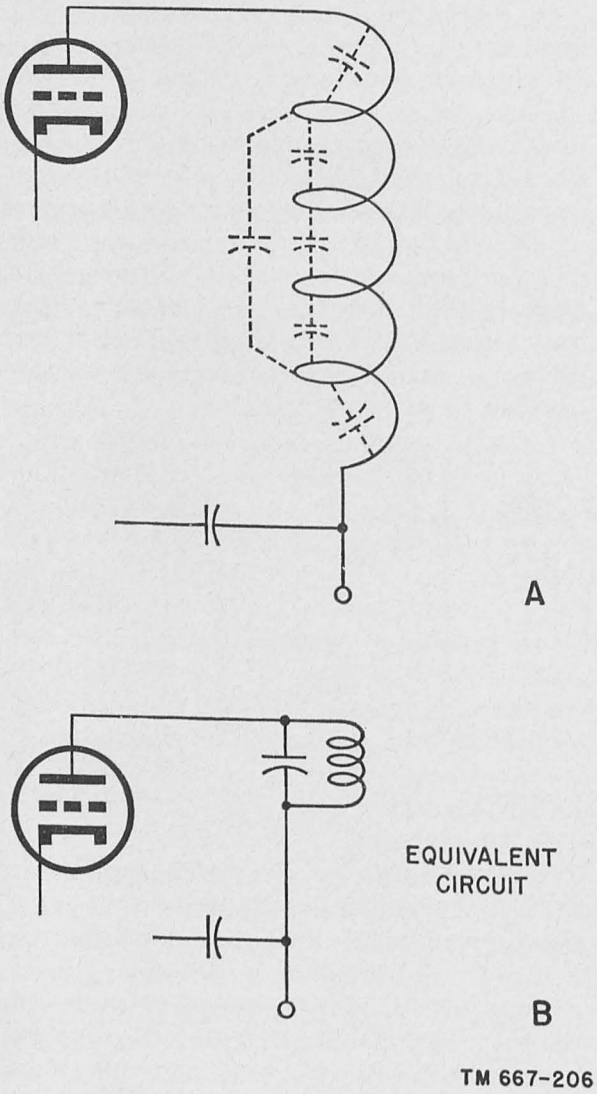

Figure 10. Parallel resonance; lumped inductance and distributed capacitance.

10. Distributed Resistance

a. General. The term *distributed resistance* seldom is used, since it is necessary to distinguish between the resistance offered to d-c (direct current) and low-frequency a-c and the resistance offered to r-f currents at the higher frequencies. D-c resistance exists in *all* conductors, depending on the conductivity of the metal or alloy used. It is distributed uniformly along conductors that are uniform in cross-sectional area, shape, and conductivity. R-f resistance, however, is caused by d-c resistance *plus* the effect of self-inductance, which is greater at the center of a conductor than at the surface. At the lower frequencies, this self-inductance has little effect on the flow of current, since the values of inductive reactance involved are extremely small. As the operating frequency is increased, the inductive reactance at the center of the conductor becomes higher and the current seeks the lower-reactance path toward the surface, resulting in a current distribution that is not uniform. Figure 11 illustrates this tendency of the current to flow on or near the surface of a conductor, which is called *skin effect.* When d-c flows through the conductor, as in A, the current flows through the entire cross-sectional area. A-c of medium frequencies cause current to flow in the outer edges of the conductor as in B. As the frequency increases, as in C, less current flows in the center of the conductor and more flows on the surface. The result is that more current is forced through less conductor, with higher losses and more heating. Since the center of the conductor is not carrying current, the effect is the same as using a smaller conductor. The r-f resistance at frequencies above 30 mc can amount to several times the d-c resistance of the same conductor.

b. Minimizing Skin Effect and R-F Resistance. Skin effect takes place *regardless* of the shape of the conductor, but it causes less r-f resistance in conductors having rectangular cross sections than in those that are circular, like common wire. Flat copper strip sometimes is used, but it is more expensive and not easy to work. Another means of reducing skin effect is the use of hollow or tubular conductors. Since all parts of the tubular conductor are affected nearly alike by the magnetic field, a good current distribution results. Litzendraht wire is made up of many strands of very fine enameled wire woven together. The current is divided among the strands and the skin effect on any single conductor is extremely small. Litz wire, as it is commonly called, is comparatively expensive, however, and is not widely used. Probably the best method of avoiding losses from r-f resistance is by silver-plating the conductors. The depth to which the current flow will pene-

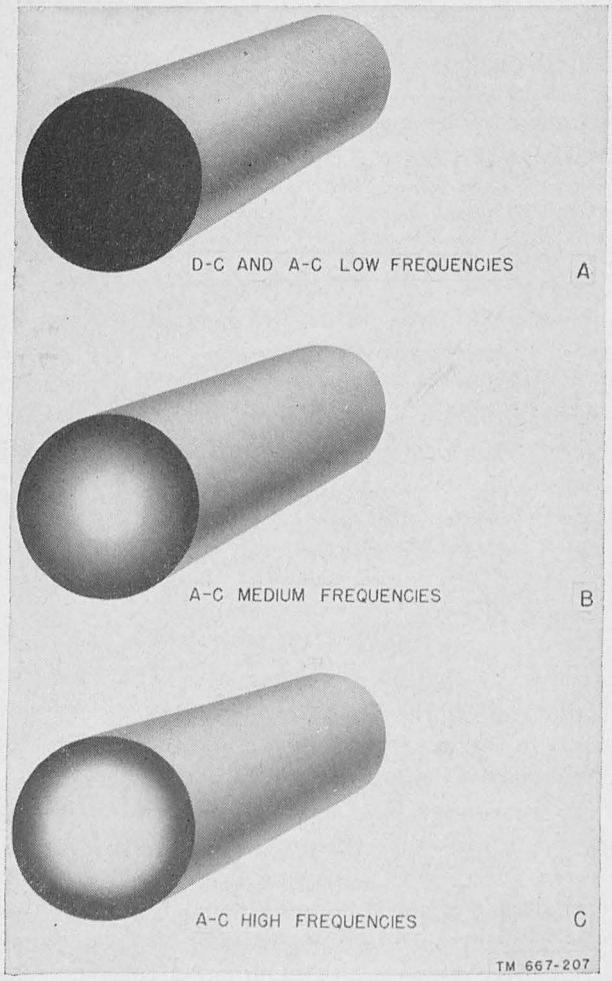

Figure 11. Skin effect.

trate at a certain frequency is calculated, after which a silver plating of this thickness is applied to a correspondingly smaller conductor. Notice that this does not eliminate skin effect, but takes advantage of it. When the plated conductor carries r-f, skin effect takes place as usual. Now, however, the current is flowing in silver, which has less d-c resistance than ordinary conductors; therefore, the r-f resistance is reduced considerably. In practice, plating is expensive and the most common means of reducing r-f resistance is to use a hollow conductor or one of larger diameter. Again, *this does not eliminate skin effect.* The depth to which the current penetrates is affected only by the frequency and the conductor material; consequently, when the diameter is increased, the current layer has the same thickness, but more cross-sectional area in which to flow. This reduces the effective r-f resistance.

c. Undesirable Effects. R-f resistance introduces losses in the same manner as d-c resistance, the effects of which are heating and attenuation. The *losses* resulting from r-f resistance are entirely separate from the losses from self-inductance, even though self-induction causes skin effect. If the r-f resistance is permitted to become two or three times the d-c resistance, the results can be serious in circuits where very small r-f currents are involved. For example, the d-c resistance of a 4-inch length of No. 20 copper wire is approximately .003 ohm, which offers negligible opposition to the flow of a current as small as 1 ma (milliampere). However, if the current is an r-f current at a frequency which causes the r-f resistance to become three times the d-c value, the same piece of wire limits the current to ⅓ ma ($I=E/R$). Thus two-thirds, or over 60 percent of the current is lost because of skin effect. If the same current (1 ma) is forced through three times the resistance, the power loss is three times as great ($P=I^2R$). Both types of loss are serious and must be taken into consideration. The simplest method of reducing skin effect is by means of a smaller sized conductor, because less cross-sectional area is left unused; this cannot always be done if power-handling capacity is important. In practice, designers attempt to use a wire size sufficiently small that the r-f resistance is no more than 1.01 times the d-c resistance (R/R is called the *resistance ratio*) at the operating frequency.

d. Desirable Effects. In certain circuits, it is necessary to add resistance to accomplish a definite purpose. For instance, A of figure 12, shows the curve of frequency response plotted against E_g, the input voltage to the grid of the tube, for a tuned i-f circuit having a *reasonably high Q.* The curve shows that the circuit passes a narrow band of frequencies near resonance. However, for accurate reproduction of high-fidelity audio frequencies modulating the carrier, this response is too narrow, and the high and low audio frequencies are cut off. One means of making the circuit respond to a wider range of frequencies (*broadbanding*) is to introduce additional r-f resistance into the LC combination. This may be accomplished either by adding a lumped resistor or by deliberately designing the inductor so that the proper amount of skin effect will occur at the i-f frequency. Whichever method is used, the result is that Q is reduced by the extra loss and the bandpass characteristic is broadened, as shown in B of figure 12.

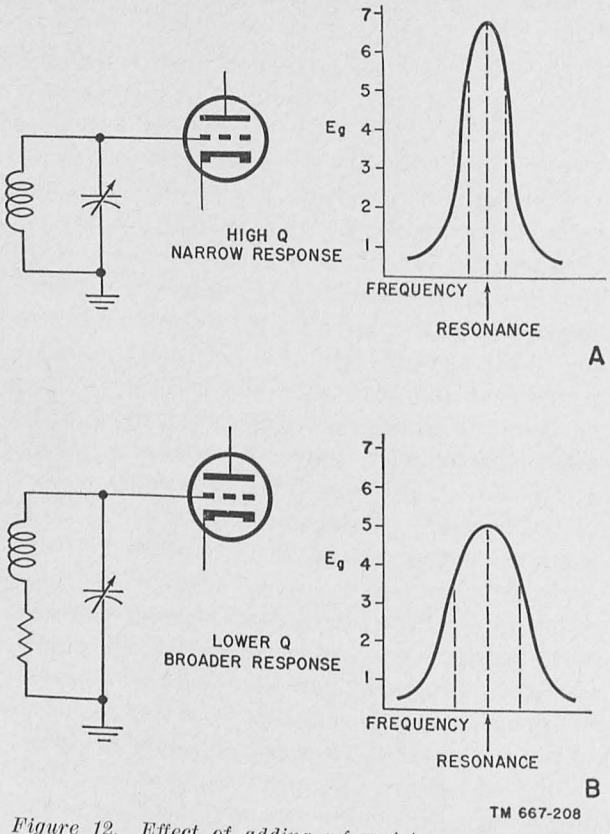

Figure 12. Effect of adding r-f resistance to a series-resonant circuit.

11. Summary

a. All conductors possess distributed properties that are important in the frequency range above 30 mc.

b. Distributed inductance, capacitance, and resistance are spread out uniformly in all the conductors of a circuit and they may or may not possess additional distributed properties caused by nearness to ground and to other conducting surfaces.

c. The actual values of distributed inductance, capacitance, and resistance in a given conductor slowly change as the frequency changes.

d. The losses in circuit elements increase as the frequency is raised.

e. Circuits employing distributed-property elements usually attain better efficiency and stability than those using lumped-property elements because losses can be kept lower.

f. Distributed inductance is the self-inductance distributed along the length of any conductor, which tends to oppose any change in a varying electron flow through the conductor. This is true regardless of the shape of the conductor.

g. The self-inductance is greatest at the point encircled by the greatest number of flux lines (the center, in the case of a common wire). This is the cause of skin effect.

h. The inductive reactance of a small value of self-inductance may become large at frequencies above 30 mc. This inductive reactance can cause a sizable voltage drop which reduces the value of the r-f or signal voltage.

i. For this reason, the distributed inductance of even the shortest possible leads, such as tube pins, cannot be neglected in the operating range above 30 mc.

j. Where a condition of series or parallel resonance is desirable, the property of distributed inductance may conveniently be used, with either lumped or distributed capacitance.

k. The mutual inductance between any two conductors coupled by their magnetic fields becomes important in the frequency range above 30 mc because the amount of coupling increases as the frequency is increased.

l. Losses may be caused by accidental coupling between leads that run too close together or between a lead and a tube shield or chassis ground. The degree of stray coupling depends on the relative physical positions of the wires and is greatest when they are parallel and close together.

m. Practical circuits should have the shortest possible leads, well separated and distant from the chassis and surrounding objects.

n. Distributed capacitance is that capacitance between any point on a conductor and all other points, including those on the same conductor. Of chief importance is the distributed capacitance between two conductors, which may be two leads, the elements of a vacuum tube, or even parts of a lumped-property circuit element.

o. Since the value of capacitive reactance decreases as the frequency is increased, at some sufficiently high frequency a small value of distributed capacitance offers a very low reactance to the flow of current.

p. The value of distributed capacitance between two conductors depends on the effective area of the surfaces, the dielectric, and the spacing.

q. To minimize stray capacitance, the circuit wiring should consist of short leads well spaced and crossing at right angles wherever possible.

r. Lumped-property inductors may be wound to provide a definite distributed capacitance between the turns, which acts like a single capacitor in shunt with the coil and gives the necessary LC ratio at the resonant frequency.

s. R-f resistance is the sum of the d-c resistance of a conductor and the additional resistance caused by skin effect at the higher frequencies.

t. Skin effect is the tendency of r-f currents to travel through the lower-reactance paths near the surface of a conductor, where the self-inductance is smaller. The result is a nonuniform distribution of current in the conductor (more current flows through less conductor) which increases attenuation and power losses.

u. Skin effect occurs in any conductor carrying r-f but it causes higher r-f resistance in conductors having a circular cross section than those that are rectangular.

v. Flat copper strip or Litz wire sometimes is used to minimize skin effect, but these materials are more expensive than common wire.

w. Another method of reducing r-f resistance losses is silver-plating the conductors to the depth at which current is expected to travel, thus providing a lower-resistance path.

x. R-f resistance is taken into consideration in circuit design, and skin effect is minimized by selecting the proper conductor size for the operating frequency.

y. Where it is desirable to add resistance to increase the bandwidth of a tuned circuit, r-f resistance may be used.

z. This can be accomplished by designing the coil so that skin effect at the operating frequency introduces the necessary amount of r-f resistance.

12. Review Questions

a. Define distributed properties.

b. What are the effects of the distributed properties of a transmission line at a frequency above 200 mc?

c. What is the relationship in dimension between the parts of an electronic circuit and the wavelength at frequencies above 30 mc?

d. What is distributed inductance?

e. At what point of a straight wire carrying a high-frequency alternating current is self-inductance the highest?

f. What is the reactance of a 6-inch wire with a self-inductance of .07 μh at 420 mc?

g. How can series or parallel resonance be obtained without the use of lumped properties?

h. What is the effect of mutual inductance when a conductor carrying high-frequency a-c runs close to another conductor?

i. What is distributed capacitance?

j. Why are the losses in distributed capacitance less than in lumped capacitance?

k. How are the circuits wired to reduce the effect of distributed properties?

l. What are the effects of r-f resistance in a high-frequency circuit?

m. What is skin effect?

n. How can skin effect be minimized?

o. What is meant by resistance ratio?

p. Why would resistance which lowers the Q of a circuit be added to a resonant circuit?

CHAPTER 3

CIRCUIT ELEMENTS—LINE SECTIONS

13. Introduction

a. General.

(1) Circuit elements are considered to be those component parts that actually perform an electrical function in the circuit, as opposed to parts that serve only a mechanical purpose. Vacuum tubes, capacitors, resistors, and inductors may be used as circuit elements, as may many other sorts of components. *Connecting wires and leads with negligible impedance are not considered to be circuit elements.*

(2) One of the most common uses for a circuit element or combination of elements is as an impedance, which may be large or small in value, and either reactive, resistive, or complex in nature. A complex impedance is one possessing both resistance and reactance; the reactance may be either inductive or capacitive in nature. Circuit elements providing impedance of the required value and nature may be made up either of lumped-property components (coils and capacitors), or from sections of transmission line, in which the properties are distributed uniformly along the length. So far as their theoretical electrical properties are concerned, either type could be used anywhere in the spectrum, from the lowest audio frequency to the highest radio frequency. Such factors as permissible physical size and required circuit efficiency, however, limit the frequency range of each type of circuit element. In the 30- to 1,000-mc range, both lumped and distributed property components are used widely in constructing circuit impedances.

b. Uses of Line Sections. In the higher-frequency range, sections of transmission line serve as resonant impedances (tuned circuits) in the grid and plate circuits of vacuum-tube amplifiers and oscillators. They are used also to form band-pass and harmonic filters, impedance transformers, balance-to-unbalance couplers, phase changers, resonant *insulators*, and in other ways. Actual sections of typical coaxial- or parallel-wire transmission line of the sort used to connect antennas to transmitters or receivers may be utilized for these purposes. It is possible, however, to attain greater power-handling capacity, higher Q, and superior mechanical and electrical ruggedness and stability with special line sections constructed of copper or aluminum tubing (fig. 13). The use of line sections is standard practice, except in temporary or makeshift circuits. In general, the efficiency and stability of circuit elements made up of such line sections is much greater than can be attained with practical lumped-property coils and capacitors.

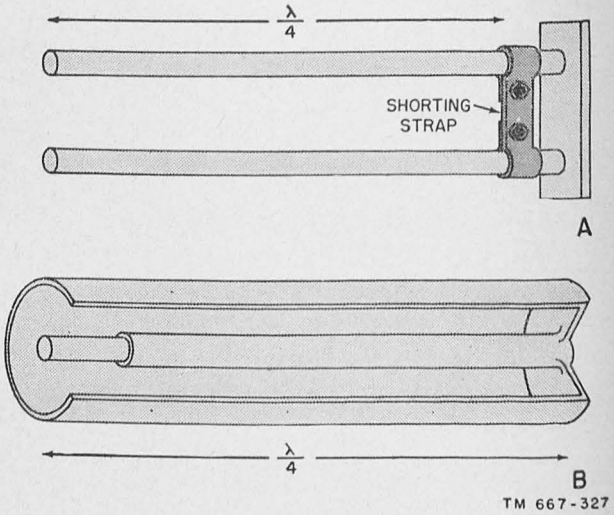

Figure 13. Typical line sections.

14. Transmission-Line Principles

a. A short section of two-wire transmission line is shown in A of figure 14, with its equivalent cir-

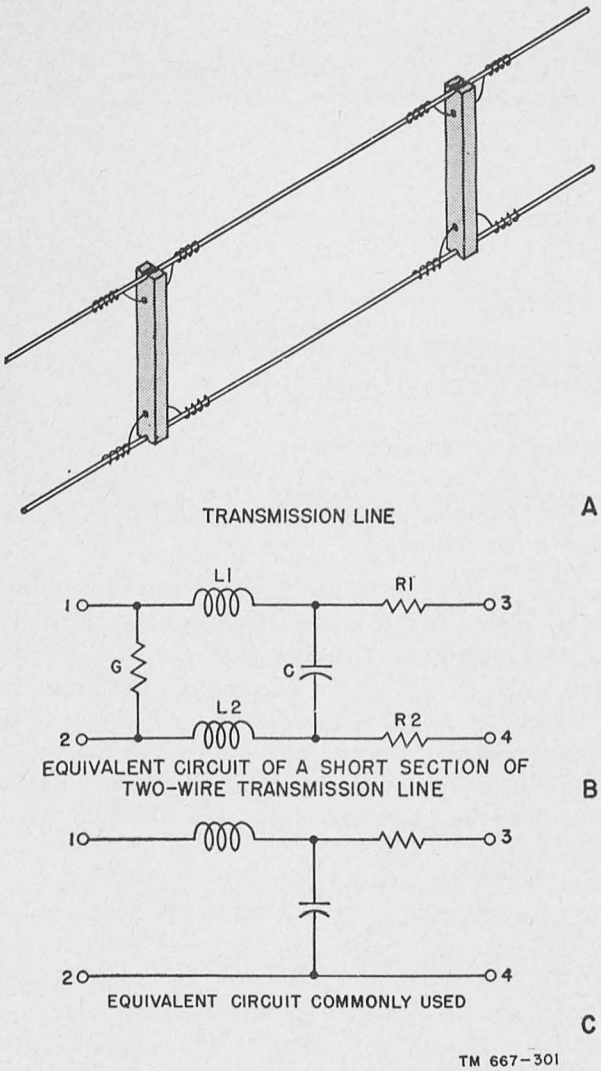

Figure 14. Transmission-line and lumped-property equivalent circuits.

cuit in B. The properties of inductance, capacitance, series resistance, and shunt conductance are represented as an infinite number of small values, distributed uniformly along the line. The inductance of an extremely short length of one of the conductors is represented by $L1$. The shunt conductance, G, which represents the extremely small conduction across the line from conductor to conductor, is shown as a high resistance. A transmission line of a finite length, equal to the spacing between the conductors or greater, should be thought of as a large number of sections such as the section from 1–2 to 3–4, as shown in B, all connected in series. A section of line of infinite length offers a certain definite impedance value at its input terminals, known as the characteristic, or surge impedance, Z_0. The value of Z_0 depends on the diameter and spacing of the conductors, and the nature of the dielectric between them. When a resistive load equal to Z_0 is connected to the output end of a line section of finite length, voltage and current from a source of a-c energy at the other end will be in phase, and there will be no reflected energy from the load. This is called terminating the line in a matching impedance. If the load is not purely resistive, or numerically equal to the line, Z_0, some energy will be reflected, producing standing waves; voltage and current will not be exactly in phase, and the length of the line will be critical. C of figure 14, shows the equivalent circuit for an unbalanced coaxial line (when conductance is considered to be zero), typical sections of which are shown in figure 15. The electrical properties of the unbalanced line are the same as for the balanced line. However, the outer conductor of the coaxial line 2–4 in the equivalent circuit of C of figure 14, can be grounded anywhere along its length without altering its performance, when the line is terminated in a matched impedance.

b. In the infinite line, or in any line terminated by a matched load, all of the energy sent into the line is absorbed, there are no reflections, and the line is said to be nonresonant. However, a *section* of transmission line, of finite length, which is not terminated in its characteristic impedance, cannot absorb all of the energy fed into it and reflection occurs. This causes standing waves of voltage and current, which are actually stored energy. Since this storage of energy causes the section of transmission line to act as a resonant circuit, it may be put to use like any similar LC combination. A line of any wavelength can produce standing waves, but to offer a resistive impedance at a particular frequency (become resonant), it must have an electrical length that is some multiple of a quarter-wavelength. When this condition is met, the inductive and capacitive reactances cancel and the section behaves like either a series-resonant or a parallel-resonant circuit at the applied frequency. Only quarter-wave or some multiple of quarter-wave line sections at the working frequency are considered *resonant* line sections. To produce the greatest amount of reflection and to give the highest or lowest possible input impedances, the line section is shorted or left open-circuited at the output end. Figure 16 illustrates the voltage-current relationships for

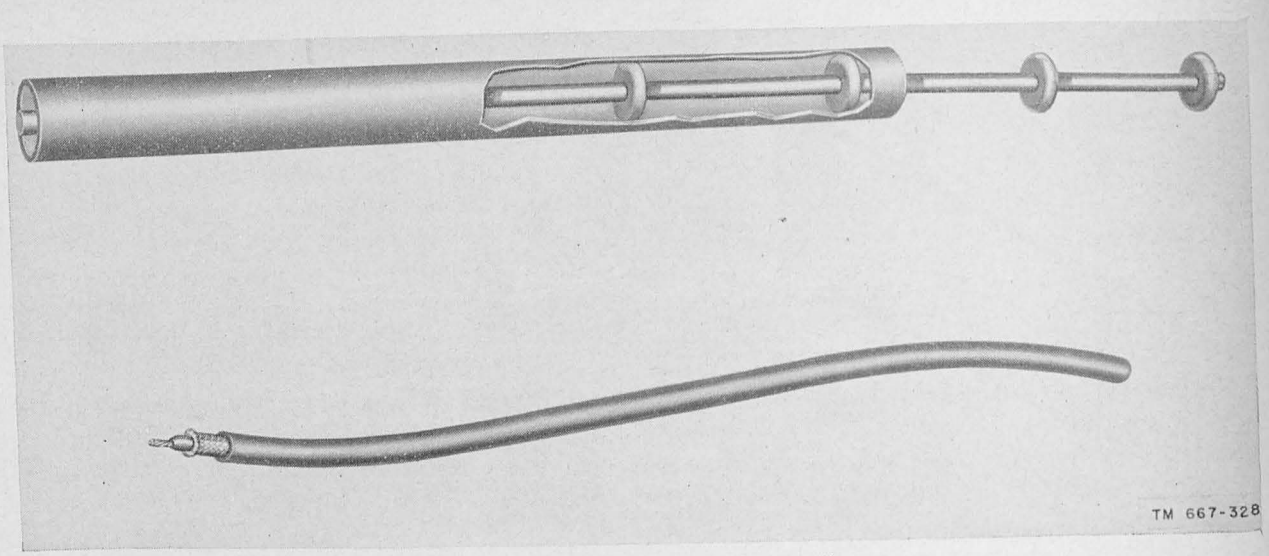

Figure 15. Unbalanced coaxial line section.

both closed-end and open-end line sections of various fractions of a wavelength and their lumped-property equivalent circuits. Each quarter-wave section *inverts* the current and voltage; for example, if voltage is maximum at the output end, it drops to minimum a quarter-wavelength back from the output end. The section of line in figure 17 shows that this is true also of the impedance. When a second quarter-wave section is connected in series with the first, a second inversion takes place, with the result that voltage, current, and impedance are the same at the input and output ends of a half-wave line section, but phase is shifted 180°. All *odd-numbered* multiples of a quarter-wave resonant line section act the same as the basic quarter-wave section, and all *even* multiples have the same characteristics as the half-wave line section.

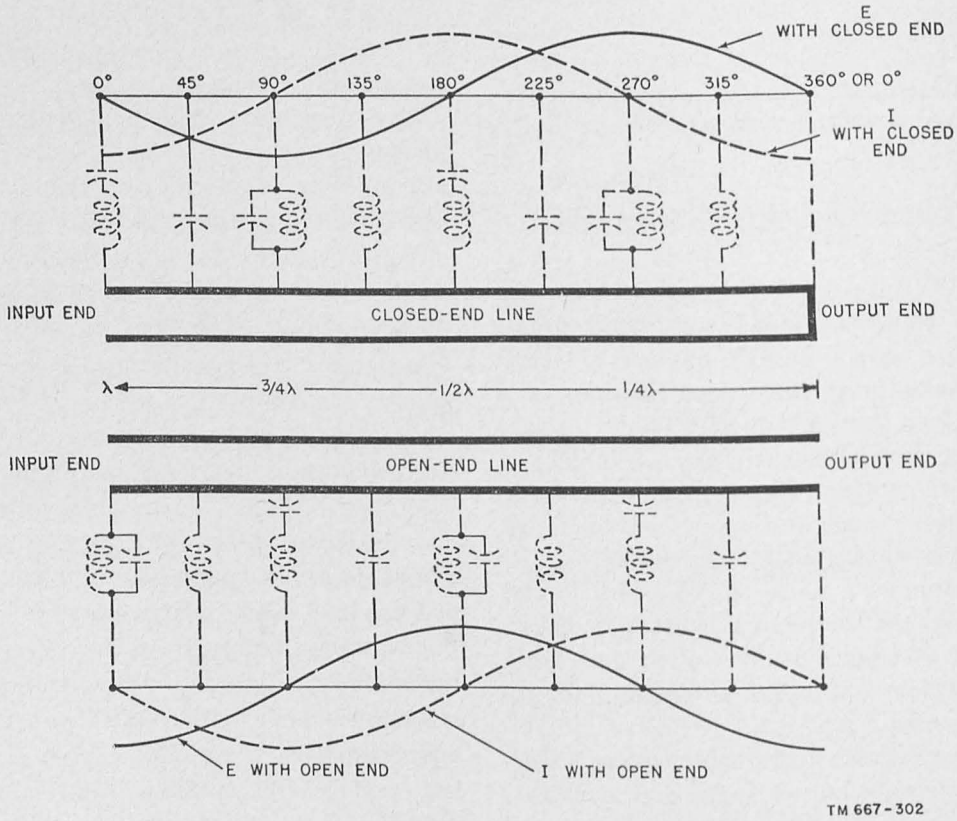

Figure 16. Voltage and current relationships in line sections.

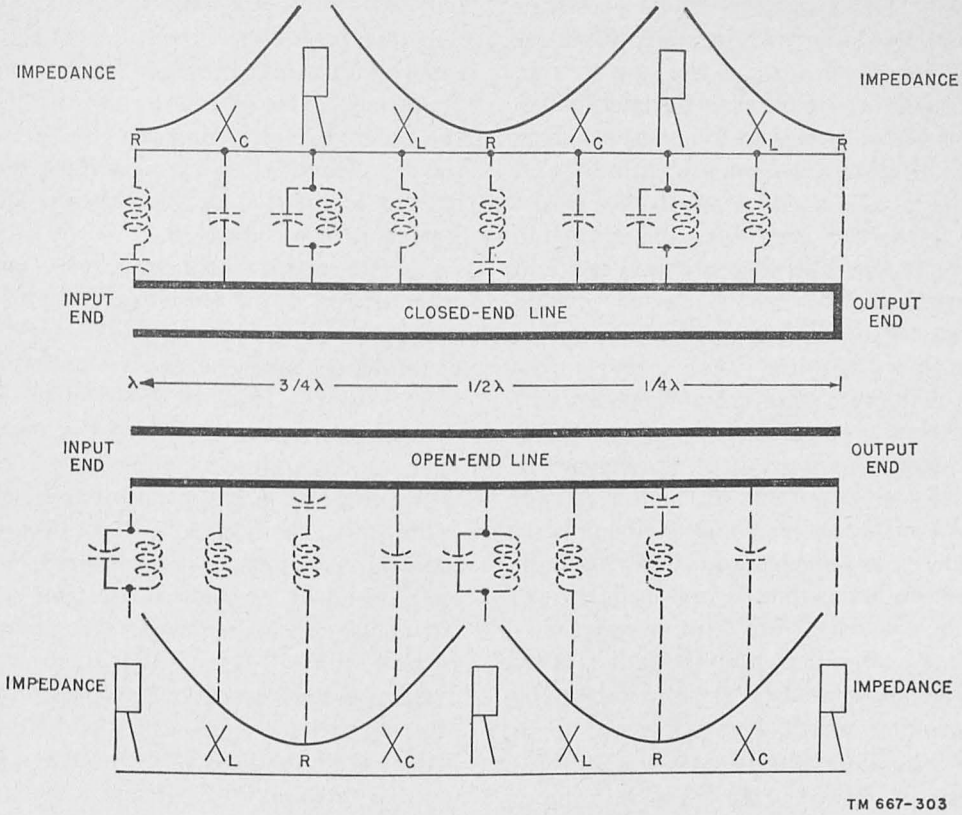

Figure 17. Impedance characteristics of line sections.

c. In figures 16 and 17, voltage, current, and impedance relationships at the output of the closed-end line section are exactly opposite to their relationships at the output of an open-end line section. This also holds true at the input ends for sections of equal lengths. Table II indicates the circuit action of closed- and open-end line sections at various lengths up to half-wave. The behavior of longer line sections will depend on whether they are odd or even multiples of a quarter-wave section.

Table II. Circuit Action of Closed- and Open-End Line Sections

Wavelength measured from output end	Action at input end	
	Closed-end section	Open-end section
Less than λ/4	E and I intermediate value. Z an intermediate value of reactance. Section acts like pure L.	E, I, and Z same as closed-end section but opposite phase. Section acts like pure C.
λ/4	Maximum Z. Maximum E. Minimum I. Z high resistance. Section acts like parallel-resonant circuit.	Minimum Z. Minimum E. Maximum I. Z low resistance. Section acts like series-resonant circuit.
Between λ/4 and λ/2	Same as open-end. Section less than λ/4.	Same as closed-end. Section less than λ/4.
λ/2	Minimum Z. Minimum E. Maximum I. Z is low resistance. Section acts like series-resonant circuit.	Maximum Z. Maximum E. Minimum I. Z high resistance. Section acts like parallel-resonant circuit.

d. The curves of voltage and current shown in figure 16 represent the actual standing waves reflected back along the length of the line section. One complete cycle occurs for each electrical wavelength (360°), but in practical line sections these cycles do not all reach the same maximum and minimum values. The attenuating effect of even a low-loss line causes the maximum and minimum values to occur at the reflecting (output) end and there is a power loss and a gradual decrease in amplitude of the waves back toward the input or source. The swr (standing wave ratio) is the ratio of the maximum rms (root mean square) voltage or current to the minimum rms voltage or current, and this ratio depends on the amount of reflection from the output end of the line section. If the section is either shorted or open, the greatest amount of energy is reflected and the swr is high. When the section is terminated in a load, the swr depends on how much of the total energy fed to the line the load can accept and dissipate. If the load accepts 90 percent, only 10 percent is available to set up standing waves, and a low swr exists because only a small amount of energy is involved. This condition produces the *flat* curve, in A, figure 18, and it is said to be caused by a *reflection coefficient* of 10 percent. The reflection coefficient is simply the percentage of energy that the load is unable to absorb and that is reflected back up the line to form standing waves. If the load absorbs only 10 percent of the total energy, 90 percent is reflected and the swr is high, resembling the curve in B, figure 18.

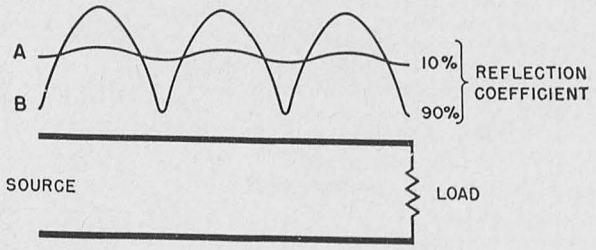

Figure 18. Effects of reflection coefficient on swr.

e. A line section may be tuned by varying its physical length. When the input frequency remains constant and the resonant line section is detuned by either lengthening or shortening it, the reactances no longer cancel and one outweighs the other, just as in a conventional tuned circuit. The line section is no longer resonant and resistive, but looks to the exterior circuit like either an inductance or a capacitance (A of fig. 19). The same result can be obtained by varying the input frequency. Increasing the applied frequency is the same as lengthening the line section, because the wavelength of the applied frequency becomes shorter in relation to the physical length of the line, as in B of figure 19.

f. Line sections between a $\lambda/4$ (quarter-wavelength) and a $\lambda/2$ (half-wavelength) invert the properties of terminating-load reactances. For example, a closed-end section between a $\lambda/4$ and a $\lambda/2$ (fig. 20) looks to the exterior circuit like a capacitance, but any part of the output end less than a $\lambda/4$ acts like an inductance. Therefore, if a part less than a $\lambda/4$ is cut off and replaced by an inductance, the section still behaves toward the exterior circuit like a capacitance. Similarly, the output end of an open-end section between a $\lambda/4$ and a $\lambda/2$ may be replaced by a capacitor, but the section still will behave like an inductance to the input r-f source. A quarter-wave resonant section connected to a reactive load thus inverts the property of the load from inductive to capacitive or vice versa, as in A of figure 20, in addition to inverting the values. Comparison of A and B shows that a half-wave resonant section acts as a repeater and the input end sees whatever value and type of load are placed at the output end.

g. When a line section is spoken of as a *quarter-wavelength* or a half-wavelength, the *electrical* rather than the physical length is meant. Radio waves travel approximately 300,000,000 meters per second in air, but they are slowed down when they encounter any material with a dielectric constant greater than that of air. In practical transmission lines, insulating dielectric supports must be used for the line conductors. Therefore, the velocity of the waves is reduced and they cannot travel as far during 1 cycle as they do in air or free space. For this reason, the electrical wavelength in the line is shorter than it would be in air at the same frequency. The velocity is reduced in proportion to the amount of solid dielectric encountered. In two-wire transmission lines separated by ceramic spacers or mounted on stand-off insulators, there is not much dielectric to slow the travel, but in solid-dielectric coaxial line the velocity and wavelength drop to about 65 percent of normal. For example, at 100 mc, a wave is 3 meters long in air but in solid-dielectric coaxial line at the same frequency 1 wavelength is 3 times

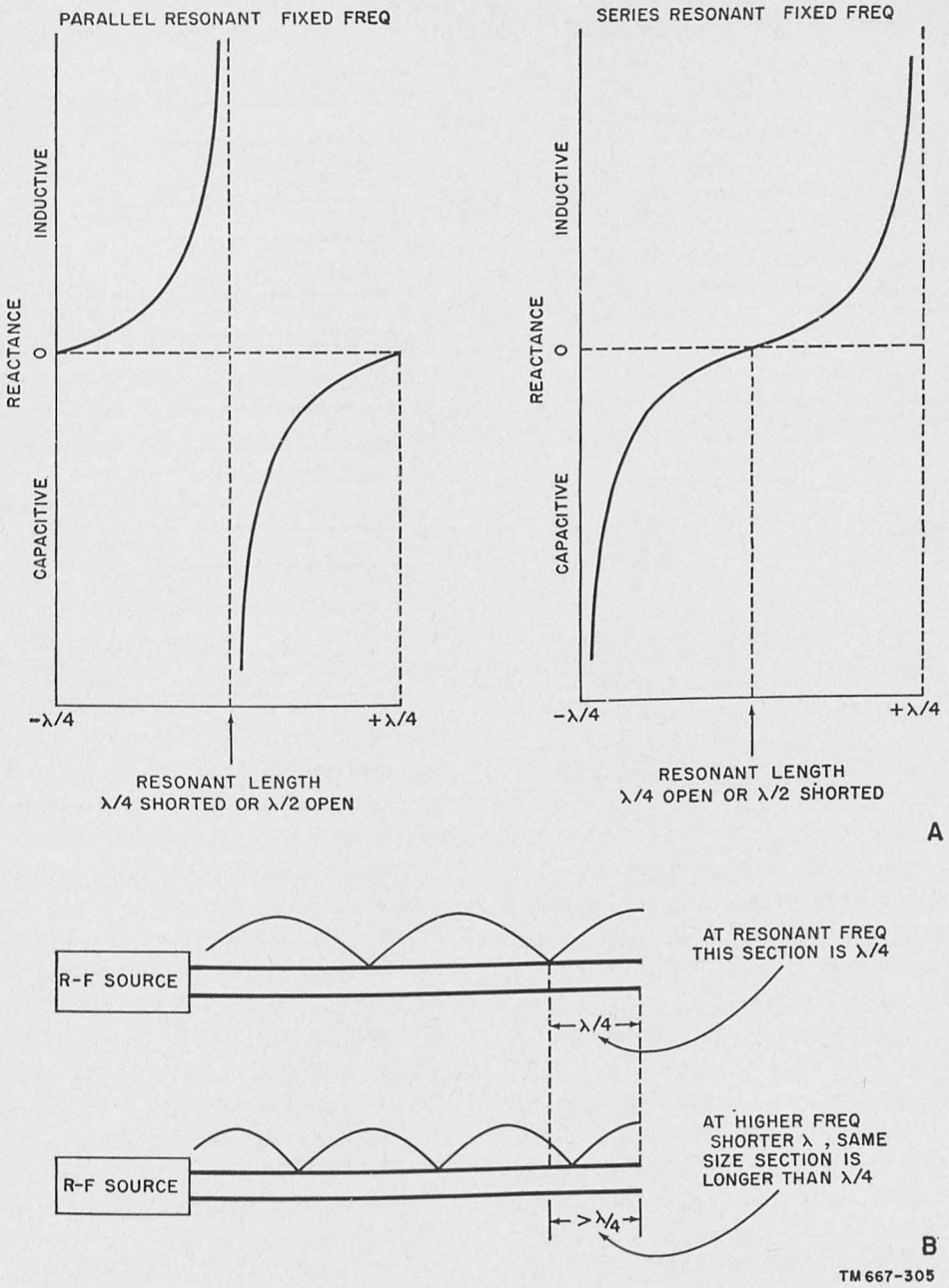

Figure 19. Tuning characteristics of line sections.

.65 = 1.95 meters. The ratio of the actual velocity along a transmission line to the velocity in air is called the V (*velocity factor*). It can be used to determine the physical length in feet corresponding to an electrical wavelength by means of the following formula:

$$\textit{length in feet} = \frac{984 \times V}{f}$$

where f = frequency in megacycles,
V = velocity factor.

A line in which most of the dielectric between conductors is air usually has a higher velocity factor than that of the solid-dielectric coaxial types. The velocity factor for two-wire air-insulated line runs between .95 and .98, and the velocity factor for solid-dielectric coaxial line varies from approximately .65 to .85.

h. Commercially available transmission lines fall into several subdivisions of the two general types.

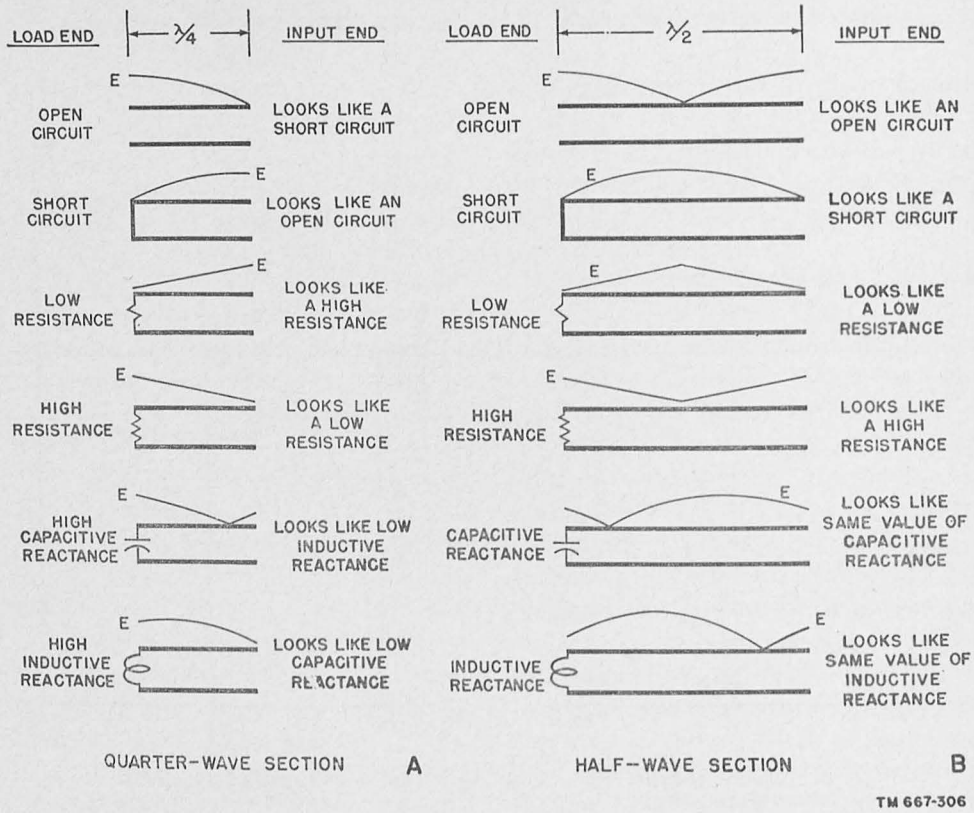

Figure 20. Load-inversion and standing-wave positions for resonant-line sections.

(1) Two-wire, open, air-insulated lines may be constructed of wire or tubing, separated by spacers made of ceramic or some other low-loss material or supported on stand-off insulators. The spacing varies from approximately 4 to 12 inches, depending on the power-handling requirements of the line. Two-wire open line can be made to have very low losses up to about 50 mc. Above this frequency, it becomes increasingly difficult to avoid radiation losses because of the line spacing. For parallel-resonant tank-circuit use, higher Q and greater mechanical strength usually are obtained by using large-diameter conductors or tubing. Two-wire solid-dielectric or ribbon line is incased in, separated, and supported by a semiflexible sold dielectric, usually of polyethylene or a similar material. The dielectric does not act as a shield and, consequently, radiation losses can occur at sufficiently high frequencies. The ribbon line is available in several sizes and spacings for both receiving and transmitting use.

(2) Coaxial (concentric) transmission line is constructed of an inner conductor surrounded by either a semiflexible metallic braid or a solid-metal outer tube. Several means are used to support and insulate the inner conductor from the outer. Solid-dielectric coaxial line has the entire space between the conductors filled with an efficient dielectric, such as polyethylene; another type of semiflexible coaxial line employs air as the dielectric, supporting the inner conductor on beads or washers of ceramic. The most efficient type is rigid in construction, consisting of two concentric copper tubes, separated by low-loss spacing washers, and filled with dry air nitrogen under pressure. This, however, is practical only in permanent installations and it is, comparatively, more expensive. The radiation losses in all coaxial lines are much lower than in two-wire types, since the outer conductor acts as a shield. Stray coupling and pick-up are negligible when the line is properly terminated, but the losses in the line are somewhat

greater. The outer shield of a coaxial line may be grounded if desired.

15. Line Sections as Parallel-resonant Circuits

a. General Properties. Above 50 mc, the difficulty of constructing efficient tuned circuits with common coils and capacitors makes some other type of circuit desirable. Sections of transmission line can fill this need, and are used widely where space and weight considerations permit. Quarter-wave closed-end, and half-wave open-end resonant line sections offer the characteristics of parallel resonance. They also have a high Q at frequencies where tank circuits with lumped-property elements become inefficient and useless. Close to resonance, the impedance curve for a quarter-wave closed-end or half-wave open-end resonant line section resembles the impedance curve for a conventional parallel-resonant circuit using lumped-property elements. The curves differ at points farther from resonance, because the reactance of the line section depends on the reflection effect which produces standing waves and not on any lumped capacitance or inductance. Resonant-line sections may be used as tank circuits in either single-ended or push-pull arrangements, depending on the requirements of a particular application. A line section, any circuit, or any part of a circuit is said to be *balanced* when it is composed of two or more potential paths which operate similarly in respect to ground, as in a push-pull circuit. An unbalanced line section or circuit is one in which a single potential path operates at some value above or below ground. An example of this is the plate circuit of a single amplifier. A horizontal parallel-wire line section is balanced, and the concentric line and two-wire line operated with one wire much closer to the ground than the other is unbalanced.

(1) *Resonant-line sections used in tank circuits.* Parallel-resonant line sections used as tank circuits in single-ended and push-pull arrangements are shown in figure 21. In a properly operated coaxial line, the outer skin of the outer conductor carries no r-f current, and may be grounded. The outer skin of the inside conductor is above ground potential and is at a relatively high impedance above ground. For this reason, the unbalanced coaxial line usually is found in single-ended circuits where it is desired to use line sections in place of lumped-property tank circuit elements. A common unbalanced arrangement is shown at A of figure 21, together with a simplified schematic of a conventional tank circuit. In the parallel-wire line section, in B, r-f currents flow in both conductors, both are above ground potential, and they present equal impedances to ground. Therefore, the line is considered balanced, and is particularly adapted to the requirements of push-pull tank circuits. In both balanced and unbalanced circuits at the resonant frequency, the line section appears to the source like a high, pure resistance, energy is stored in the line, and very little power is required from the source to maintain this condition. The two-wire resonant line section is used generally in the frequency range from 50 to 300 mc, because the tank circuit is somewhat more easy to tune. However, radiation losses can occur from two-wire sections, particularly at the higher frequencies. This reduces the effective Q and decreases the impedance at resonance, resulting in a decrease in efficiency as the frequency is raised. Since coaxial lines are self-shielding, radiation losses from coaxial line sections are extremely small, and there is little loss of Q from this source. Resonant-line sections made from coaxial line are more difficult to tune, however, because of the physical arrangement.

(2) *Tuning.*

(*a*) Resonant-line sections used as parallel-resonant circuits differ from the conventional lumped-property components in their response to the harmonics of the fundamental resonant frequency. For example, a quarter-wave section of a closed line will act as a parallel resonant circuit to the fundamental frequency. However, at twice the fundamental frequency (second harmonic), the quarter-wave section acts as a series-resonant circuit. The impedance curve (fig. 17) shows that a line section theoretically offers maximum or minimum impedance at every har-

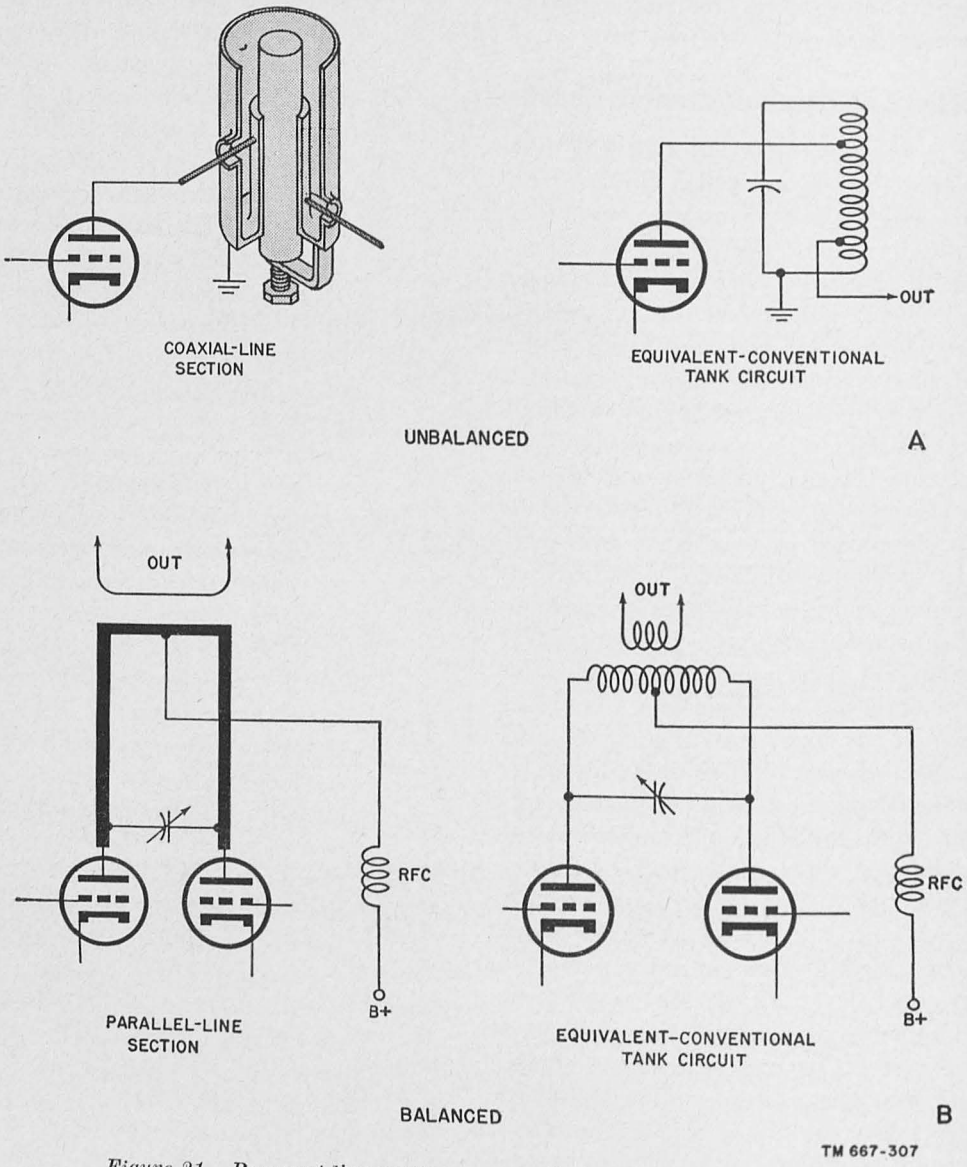

Figure 21. Resonant-line sections as parallel-resonant (tank) circuits.

monic of the fundamental frequency. Actually, this curve is not a true representation because of *end effect*, which causes the open end of a resonant line section operating at a hormonic to behave as if the section had been lengthened physically by a fraction of a wavelength. The section does not become resonant exactly at the second harmonic, but somewhat above it. When a lumped reactance is used across the line for tuning purposes, the end effect is increased. Where it is necessary to tune a line section, a variable capacitance (A of fig. 22) often is used to avoid changing the actual physical length of the line. This capacitor shortens the effective wavelength of the resonant section, thus reducing the space taken up by the tank circuit. However, the presence of such a lumped capacitance upsets the response of the section at the harmonic frequencies. Other methods of tuning resonant sections may be used; the most common forms are shown in B of figure 22.

(*b*) Two-wire sections should be spaced no farther apart than about $1/10$ wavelength at the resonant frequency, or

radiation losses may become excessive. Spacing large-diameter conductors too closely also introduces losses, resulting from eddy currents, and adds to the danger of voltage break-down and arcing. For this reason, parallel wires should not be closer than about *twice the diameter of one conductor.* When tuning two-wire line sections by means of a short-circuiting strap, as in A of figure 22, the strap must make a very low-resistance contact with the conductors because any sizable resistance will seriously reduce the Q of the tank circuit. When a shunt capacitance is used, the capacitor must have minimum distributed inductance and the lowest possible losses. Supporting the capacitor entirely on the line conductors, so that no solid dielectric is in the electric field, is the most practical means of maintaining a high Q. A telescoping tube may be moved inside the line to change the effective length of the inner conductor. Coaxial line sections also may be tuned by means of a shorting disk or a lumped capacitor. The lumped capacitance must have a low-loss and a high Q. It may be connected at the open end of the line, which gives the greatest tuning effect per unit of capacitance, or by tapping down on the line, which has less effect on the circuit Q. If the shorting-disk method of tuning is used, the disk must make perfect electrical contact to avoid the introduction of additional contact resistance. The different methods of tuning coaxial lines are shown in B of figure 22.

(3) *Coupling to resonant-line sections.* As long as the total length of a line section is resonant, both the generator and the load may be tapped on at any desired impedance point. This frequently is done to make the impedances match, just as connections are tapped on a conventional tank circuit coil. No matter where the generator, or the load, is tapped, the tank circuit will appear resistive. When coupling inductively to the two-wire line section, a hairpin loop

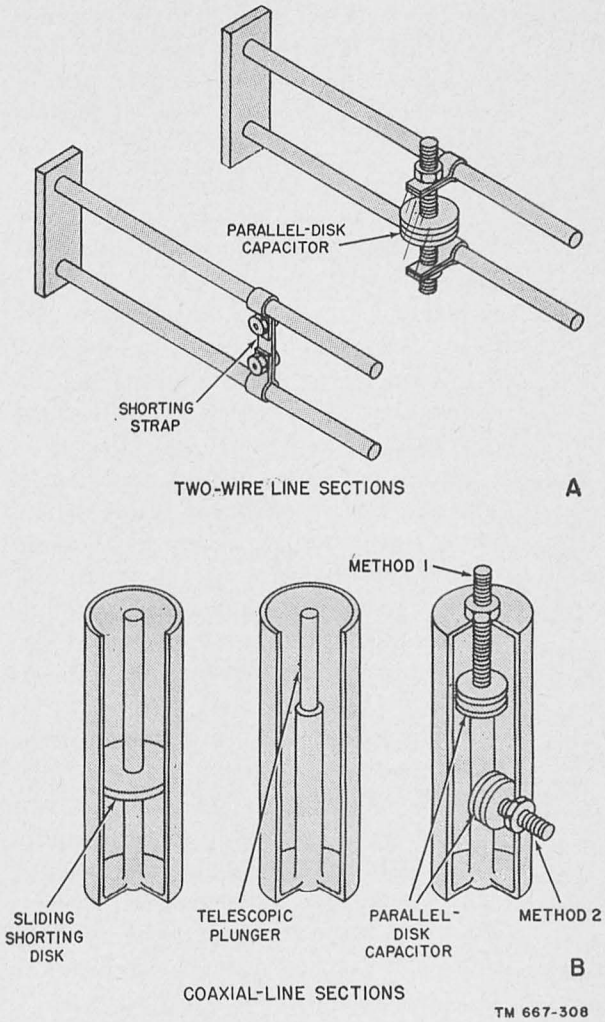

Figure 22. Common tuning methods for two-wire and coaxial resonant-line sections.

is used. Since the r-f field about the two-wire resonant line section is not confined, the hairpin loop may be placed at the necessary distance from the line section to give the desired degree of coupling. Inductive coupling to the coaxial-line section is mechanically more difficult because the field is confined almost entirely within the outer conductor. A small loop is inserted through an opening in the outer conductor and provision often is made for rotating the loop to provide control of the degree of coupling. When the loop is at right angles to the field, maximum coupling is achieved; when it is parallel to the field, coupling drops to a minimum, and would go to zero save for the small capacitive

221643°—52——3

coupling between the loop and the inner conductor. To reduce losses, the two leads from the coupling loop frequently are brought out in the form of flexible coaxial cable.

(4) *Impedance and Q.* In coaxial-line sections, the inside surface of diameter (D) of the outer conductor, and the outside surface of diameter (d) of the inner conductor, are called the effective surfaces. The ratio of their diameters, D/d, is a main factor in determining the unloaded Q of a line section using air as the dielectric. The highest unloaded Q is obtained when the ratio of diameters is 3.6 to 1; that is, when the inside diameter of the outer conductor is 3.6 times the outside diameter of the inner conductor. The actual unloaded Q of a line section in practical use is influenced also by the operating frequency. This is shown in A of figure 23, with the Q increasing as the effective diameter of the outer conductor becomes a larger fraction of a wavelength. Obviously, this is limited by the available space in equipment, although for laboratory purposes, where high Q is important and space is not, very large diameters may be used. The diameter of the inner conductor in each case is kept at the D/d ratio, 3.6 to 1. In B of figure 23, the diameter of the outer conductor remains constant and the graph shows the effect of making the inner conductor smaller to change the D/d ratio. The maximum unloaded impedance at resonance occurs at a much higher ratio of D/d than the ratio which gives maximum Q. However, a tank circuit usually must be loaded if it is to be of any use, and loading always causes a reduction of the Q and the effective impedance. If a heavy load is connected to a line section designed for maximum unloaded impedance, D/d of 9 to 1, the result may be an effective impedance nearly as low as the unloaded impedance of a line section designed for maximum Q, D/d of 3.6 to 1. This drop in effective impedance is not particularly important, since the resonance curve will remain sharp. In commercially available coaxial line sections, ratio D/d will vary from about 2:1 to as high as 10:1. Line sections that regulate the frequency in measuring devices require special construction methods; for example, the surfaces of the lines may be machined to exact tolerances, or they may be built up to the correct size by electrolytic deposit, to attain the desired D/d ratio for maximum Q. For two-wire line sections, the effects of loading on impedance and Q are similar. The curves in B are approximately true for two-wire sections if the

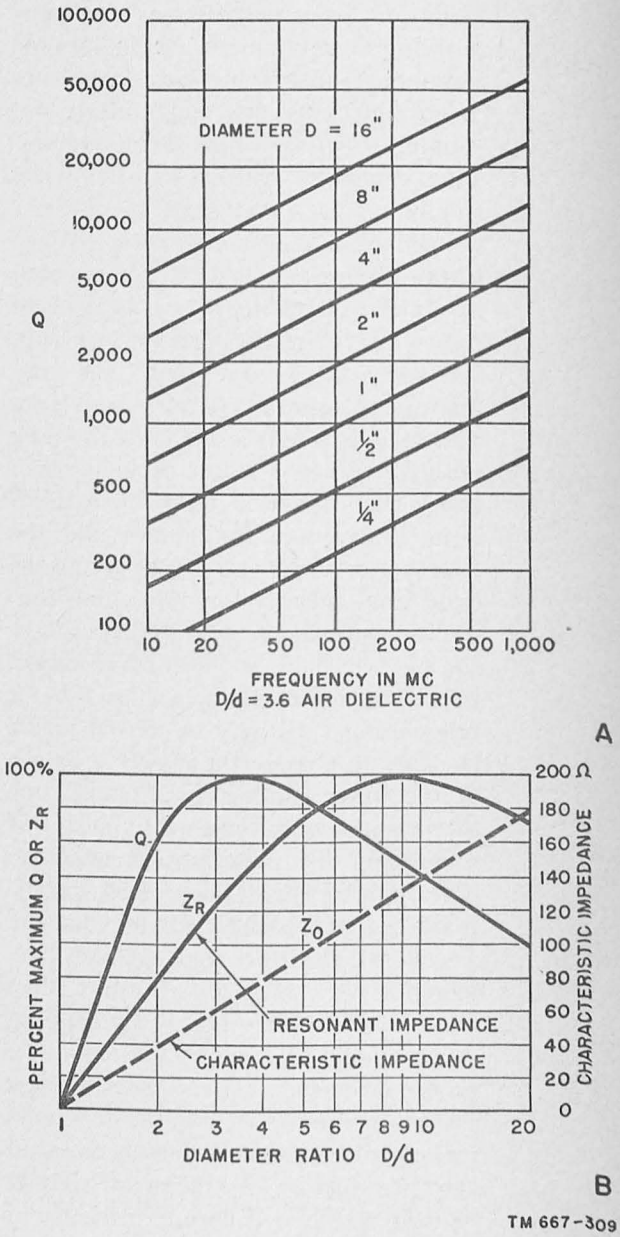

Figure 23. Impedance and Q of coaxial-line sections.

ratio of center-to-center spacing to the *radius* of the conductors is substituted for the ratio of diameters, D/d. The characteristic impedance of the two-wire line varies in the same straight-line manner, but the actual values will be double those shown for the coaxial type.

(5) *Advantages of quarter-wave over longer resonant line sections.* It would seem that a half-wave line section would have a higher Q than a quarter-wave line section, since more energy can be stored. However, the longer section also increases line losses so that the Q remains about the same. Although the longer line section suffers less reduction in Q than the quarter-wave section, larger conductors can be used to reduce the effective r-f resistance and improve the Q. The load is tapped on the tank at the desired impedance point. Harmonic response is controlled easily in a quarter-wave tank circuit, since it responds to the odd harmonics only; the half-wave tank circuit, however, responds to both odd and even harmonics. The third harmonic can be practically eliminated by loading with a small value of capacitive reactance to increase the end effect or by tapping the tank to the third-harmonic voltage node. Although quarter-wave and half-wave line sections are most commonly used, the statements made here about the basic quarter-wave sections also are true for sections composed of any odd multiples of a quarter-wave. Statements about half-wave sections hold true for any multiple of a half-wave.

(6) *Two-wire versus coaxial-line tank circuits.* The two-wire line is much easier to tune and coupling is more convenient, but radiation from the parallel conductors is likely to be high if any unbalance is present. Unbalance may be caused by an unbalanced condition at either the source or the load, or by one conductor being closer to ground, or to a grounded object, than the other. When radiation occurs, not only is power lost, but energy may be coupled back into the grid circuit, causing either regeneration or degeneration and upsetting proper operation of the stage. Coaxial-line sections are more difficult to tune, but the self-shielding construction incloses all of the field except where an end is open, and the possibility of stray coupling is reduced considerably. This means that the coaxial tank circuit may be located closer to other circuit elements, resulting in a more compact physical arrangement with fewer losses.

b. Practical Uses.

(1) *Vacuum-tube circuit impedances.* The characteristics of vacuum tubes are such that high impedances often are required in the grid, plate, and cathode circuits of amplifiers and oscillators. Resonant-line sections are used widely for these purposes at frequencies of 30 to 1,000 mcs, since high Q values are more conveniently obtained than with lumped-property tank-circuit elements. Figure 24 shows a low-power push-pull circuit using a half-wave resonant-line section, which is a combined oscillator and amplifier designed for operation at 400 mc. The half-wave resonant-line section used as the plate-load impedance offers a high impedance at each end and a low impedance at the effective midpoint (fig. 17). The d-c plate voltage for the tube is applied at the low-impedance midpoint, through the two 100-ohm resistors. These resistors help to damp out parasitic oscillations. The plates of the tube feed into the desired high impedance at the input end of the line section. The line section is adjusted to exact resonance by the capacitors (fig. 24) at the output end. A hairpin loop is used to couple the antenna to the line. The stability and the efficiency of the amplifier depend largely on the tank-circuit Q. By using the resonant-line section, the Q is increased approximately two to five times over that which might be expected from conventional coils and capacitors operated in the same circuit at the same frequency. Although the circuit shown here is balanced, the same improvement in Q, stability, and efficiency can be obtained in single-tube amplifiers using unbalanced,

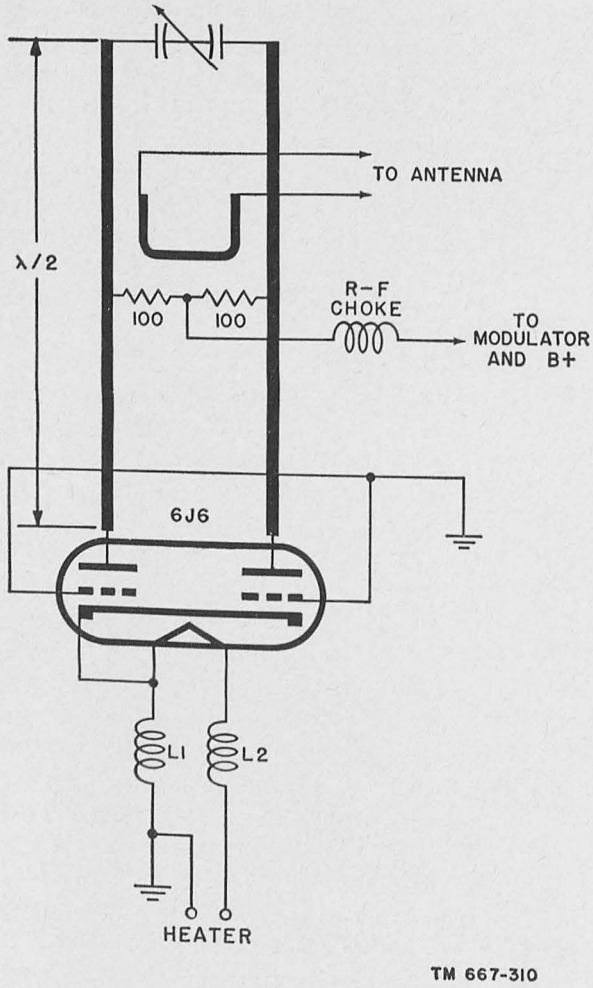

Figure 24. Two-wire line section as (push-pull) plate load impedance.

coaxial resonant-line sections as circuit impedances.

(2) *Frequency-controlling elements.* Oscillators operating in the 30- to 1,000-mc region require accurate frequency control. Crystal-controlled frequencies, overtone circuits, or frequency multipliers can be used but, for many purposes, some other frequency-control element is desirable. Parallel-resonant line sections can be constructed to control frequency with an efficiency and frequency stability comparable to that of the crystal. A Hartley oscillator operating at 200 to 220 mc, with a coaxial-line section used as the tuned-grid circuit, is shown in A of figure 25. The coaxial section uses a tubular inner conductor, but the outer conductor is a square shield instead of the more familiar cylindrical shape. As long as the field distribution is uniform, however, the section could have any physical shape and offer high Q and good frequency stability. The inner conductor is tapped at the desired impedance points and the incoming signal is inductively coupled to the line. The section is adjusted to exact resonance by means of a capacitance which is paralleled by a temperature-compensating capacitor to avoid frequency changes under operating conditions. A number of oscillator circuit arrangements are possible using the balanced line, the two-wire line, and the unbalanced line as resonant circuits. The main consideration is low-loss, high-Q design, to increase efficiency and minimize instability. The similarity of the circuit to one with lumped properties is shown in the equivalent circuit of B of figure 25.

(3) *Metallic insulators.* Since a quarter-wave closed-end resonant line section offers a high impedance to currents at the resonant frequency, it may be used as a stand-off insulator (*insulating stub*) for a transmission line carrying that particular frequency. A, of figure 26, shows a λ/4 stub used as an insulator in a two-wire line-section and B shows the stub in a coaxial line. In order to offer the highest possible impedance to the transmission line, the Q must be very high. This requires the insulating section to be of low-loss construction and cut to an exact electrical quarter-wavelength. For transmission lines operating at single frequencies, this arrangement is stable and mechanically strong and makes an efficient insulator, but it is highly sensitive to frequency. If the signal frequency is varied above or below the resonant frequency of the stub, the impedance of the stub is lowered and the stub will act as a capacitance or an inductance across the line. The sensitivity of such a line to small changes of signal frequency may be reduced somewhat by spacing the stubs at odd quarter-wavelengths along the line. The additional stubs will minimize reflec-

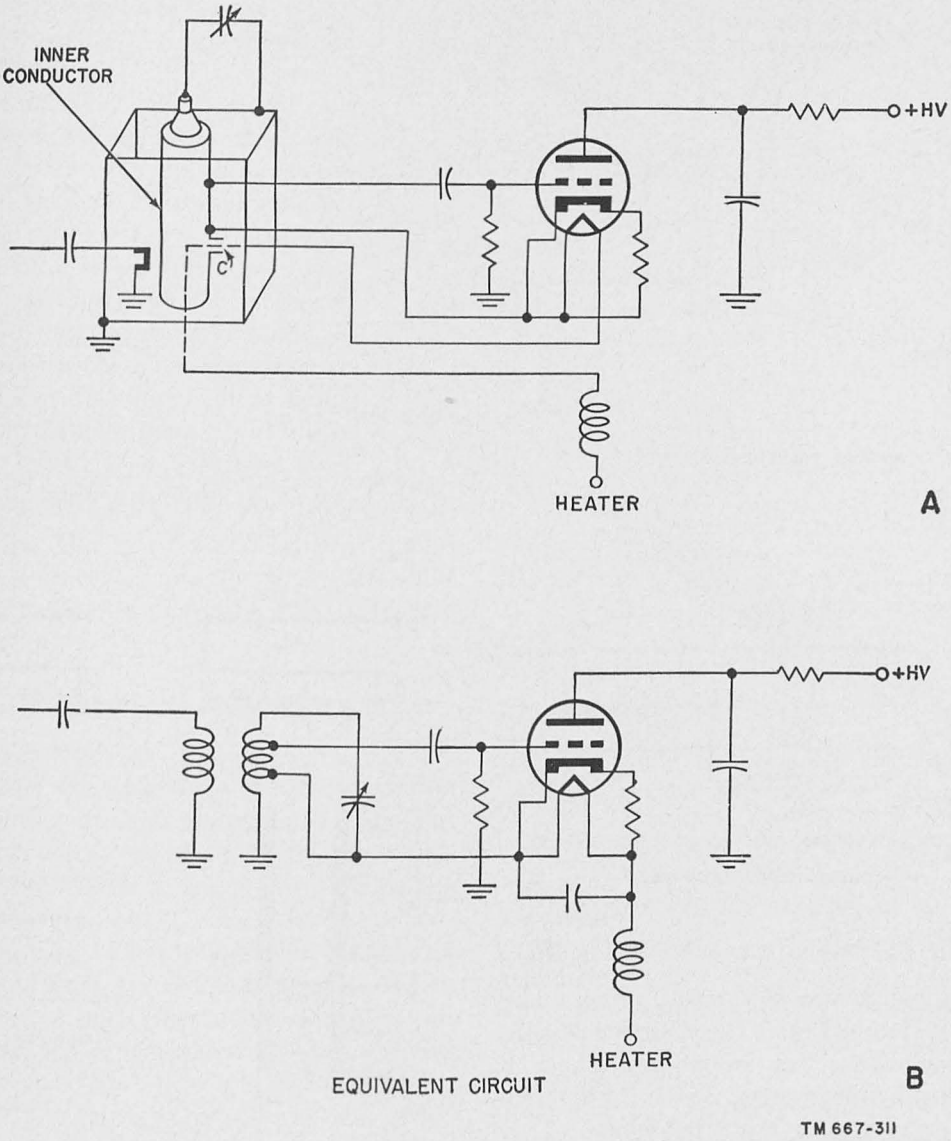

Figure 25. Coaxial-line section as frequency-controlling element.

tions, but are effective only on a relatively short line. A common method of broadbanding or reducing the frequency sensitivity is to incorporate into the line half-wave sections which have a lower characteristic impedance than the rest of the line. A stub is connected at the midpoint of each added half-wave section. This arrangement does not affect the characteristic impedance of the line, but it cancels reactances and broadens the impedance curves of the stubs. As a result, the line frequency may vary up to 15 percent from the resonant frequency without serious loss of insulator efficiency.

(4) *Impedance transformers.* The inverting action of a quarter-wave line section also makes it a convenient device for use as an impedance transformer. Impedances may be stepped up or stepped down, as desired, and the line section may be operated in a balanced or an unbalanced condition. The balanced two-wire impedance transformer and its equivalent circuit are shown in B of figure 27. The unbalanced coaxial impedance transformer and its equivalent circuit are shown in C. Reference to the impedance curves of A demonstrates the impedance inversion which takes place. A mathe-

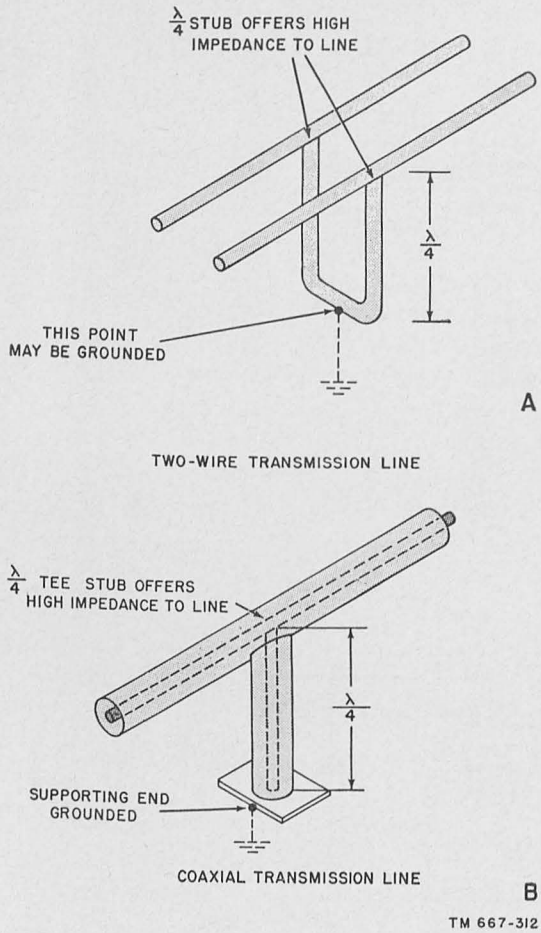

Figure 26. Resonant-line sections as metallic insulators.

matical relationship exists which makes it easy to calculate the characteristic impedance the line section must have to provide the desired match. This relationship states that the square of the characteristic impedance equals the product of the input impedance and the load impedance, or

$$Z_o^2 = Z_{in} \times Z_{load}$$

This frequently is written:

$$Z_o = \sqrt{Z_{in} \times Z_{load}}$$

The necessary characteristic impedance of a quarter-wave section to match a 600-ohm transmission line to a 73-ohm antenna is figured as follows:

$$\begin{aligned} Z_o &= \sqrt{Z_{in} \times Z_{load}} \\ &= \sqrt{600 \times 73} \\ &= \sqrt{43{,}800} \\ &= 209 \text{ ohms.} \end{aligned}$$

The quarter-wave line section must have an impedance of 209 ohms to provide the necessary match. Any two line sections may be matched in this manner, provided that the impedances are resistive. A line section used as a transformer often is called a Q section and may be any odd number of quarter-wavelengths. To save space and make it less frequency-sensitive, a single quarter-wave section is used. The sensitivity to changes in frequency becomes greater as the ratio of input to load impedances increases. In the example mentioned above, the *impedance transformation ratio* is 600 divided by 73, or approximately 8 to 1. Under

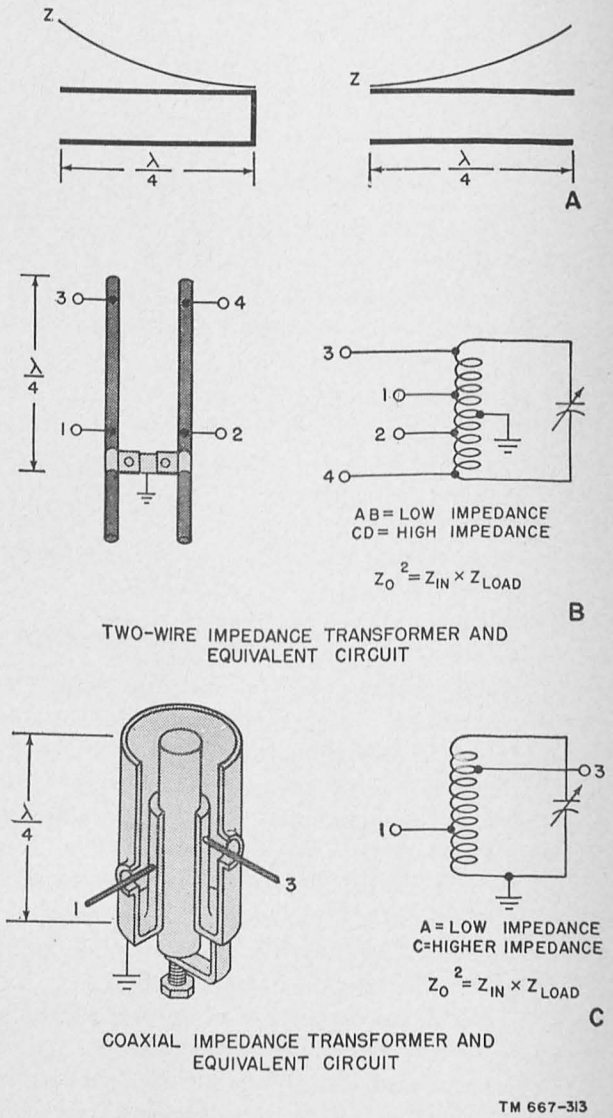

Figure 27. Resonant-line sections as impedance transformers.

these conditions, the operating frequency might vary by several percent without seriously affecting the impedance match. At high ratios, however, a frequency deviation of as little as 1 percent will cause a mismatch and result in losses. Ordinarily, the Q section is made with a fixed characteristic impedance. For some applications, it may be necessary to adjust the output impedance because the load or source impedance is not known accurately. The spacing of two-wire line sections may be varied to achieve this, but in the coaxial line a special type must be used. This has an elliptical outer shield and an inner conductor of the same shape, which may be rotated independently. Changing the position of the inner conductor in respect to the outer conductor varies the characteristic impedance.

16. Line Sections as Series-resonant Circuits

a. General Properties. The quarter-wave open-end section and the half-wave closed-end section behave like series-resonant circuits at the resonant operating frequency. A of figure 28, illustrates the $\lambda/4$ section, C the $\lambda/2$ section, and B, the equivalent conventional circuit using lumped-property elements. The input impedance seen by the energy source at 1 and 2 is low at resonance and it is always a pure resistance. The Q would be infinite and the input impedance value would be zero, save for the losses in the line section. With low-loss lines, a high Q is obtained and therefore the actual input impedance approaches zero. To the source, this looks almost like a short circuit. The series-resonant effect is the same in either two-wire or coaxial-line sections. The series-resonant line differs from the parallel-resonant line only in that the quarter-wave section is open-end and the half-wave section is closed-end. The impedance, Q, tuning, and other practical considerations apply equally to the use of the line sections as series- or parallel-resonant circuits.

b. Practical Uses. Resonant-line sections functioning as series-resonant circuits are used where it is desired to present a low, purely resistive impedance to a narrow band of frequencies. One of the most common applications is as a band-pass filter, used either alone in a transmission line to suppress even harmonics or in conjunction with

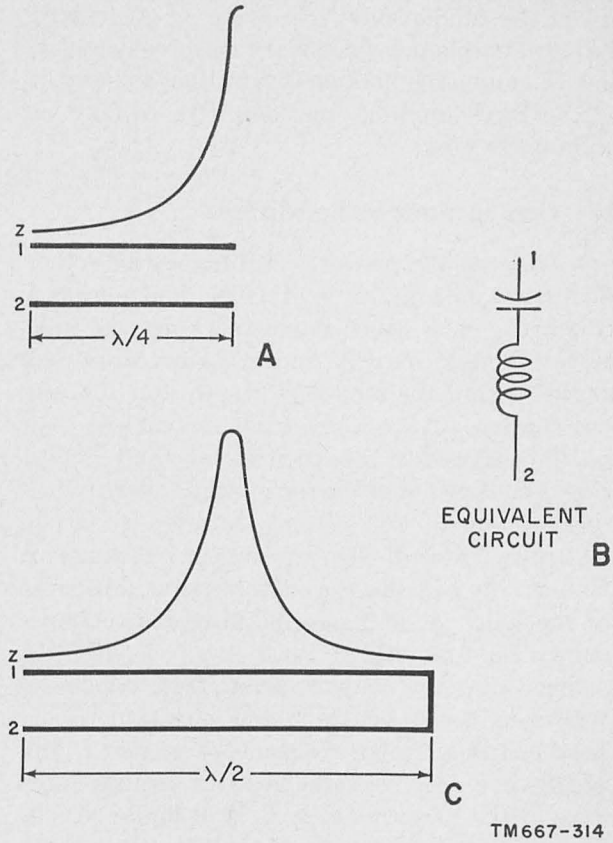

Figure 28. Resonant-line sections as series-resonant circuits.

other filter types for suppression of all the harmonic frequencies. A of figure 29, illustrates the manner in which even harmonics are practically eliminated from an antenna transmission line by inserting an open-end quarter-wave section in one side of the main line. This $\lambda/4$ section offers a low impedance, in B of figure 29, and does not prevent current flow at the fundamental frequency. At the second harmonic, however, the wavelength is halved and the same section becomes a half-wave open-end section which acts like a parallel-resonant circuit. An extremely high series impedance therefore blocks the second harmonic. At the fourth harmonic, the filter becomes a full-wave section, and at every *even* harmonic, the section is a multiple of a half-wavelength and behaves like the half-wave section to block these frequencies. At *odd* harmonics, the same section becomes a multiple of the basic quarter-wave section and offers a low impedance that permits the odd harmonic frequencies to pass. If it is desired to eliminate these odd harmonics, another means must be used, since any attempt to use a resonant-line section for the purpose results in excessive

loss at the fundamental frequency. Fortunately, the third harmonic, which is the most troublesome, may be eliminated in the resonant-line tank circuit of the final amplifier by capacitive loading or tapping the tank.

17. Line Sections as Reactances

a. General Properties. A line section other than a $\lambda/4$, or a multiple of a $\lambda/4$, functions as a reactance. The value of reactance may be high or low and it may be inductive or capacitive, depending on the electrical length and the line termination. An open-end line section less than a $\lambda/4$ behaves like a capacitive reactance, and a closed-end section of the same length offers inductive reactance. For sections exactly a $\lambda/8$ or odd multiples thereof, the theoretical reactance is numerically equal to the characteristic impedance of the line. A, of figure 30, gives the reactance curves for line sections up to 1 wavelength. In a theoretical line with no losses, pure reactances with zero power factors would exist, but in any practical line a small resistance is present. This results in a resistive value in series with the reactance of the line section, as in B of figure 30. At approximately a $\lambda/8$, or multiples thereof, the reactance offered by the line section is equal to the characteristic impedance. The reactance has a definite power factor, but in a section of well designed line it will be very small and the section can function as an extremely low-loss reactance with much greater efficiency at high frequencies than can be obtained with lumped-property reactances. The reactance of line sections, however, changes much more rapidly with frequency than that of lumped-property components.

b. Practical Uses. Line sections often are used as reactances to remove standing waves from transmission lines by tuning out or canceling reactance components in mismatched loads. They also find applications as low-loss substitutes for lumped reactances in filters.

(1) *Line-matching stubs.* When a transmission line is used to feed a reactive load, such as some antenna arrays, standing waves are set up because of the load mismatch. To provide a proper impedance match and eliminate the standing waves, a *stub* is used. The stub is placed at a point on the line where the resistive component is equal to the characteristic impedance of the line. At this point there is also a reactive component (B of fig. 30) and the length of the stub is adjusted until its reactance is equal and opposite to that of the line. When this is done, the line is matched at that point and standing waves are eliminated from there back to the input end or source. For this reason, the stub is placed as near to the load as is practical even though there are four points on every electrical wavelength of line where the resistive component equals the characteristic impedance. The approximate location for the stub, as well as the stub length, can be found by using the chart of figure 31 but, because of variations in practical lines, some final adjustment is necessary. A closed-end stub generally is used for convenience of adjustment. In practice, the standing-wave ratio must be determined by means of a probe and an indicating device. Maximum and minimum

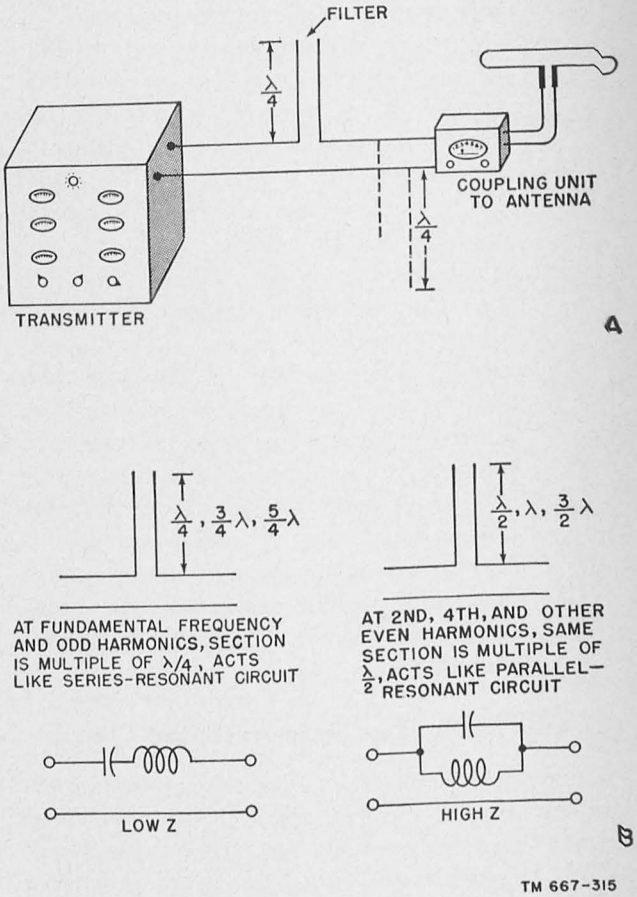

Figure 29. Resonant-line sections as band-pass filters.

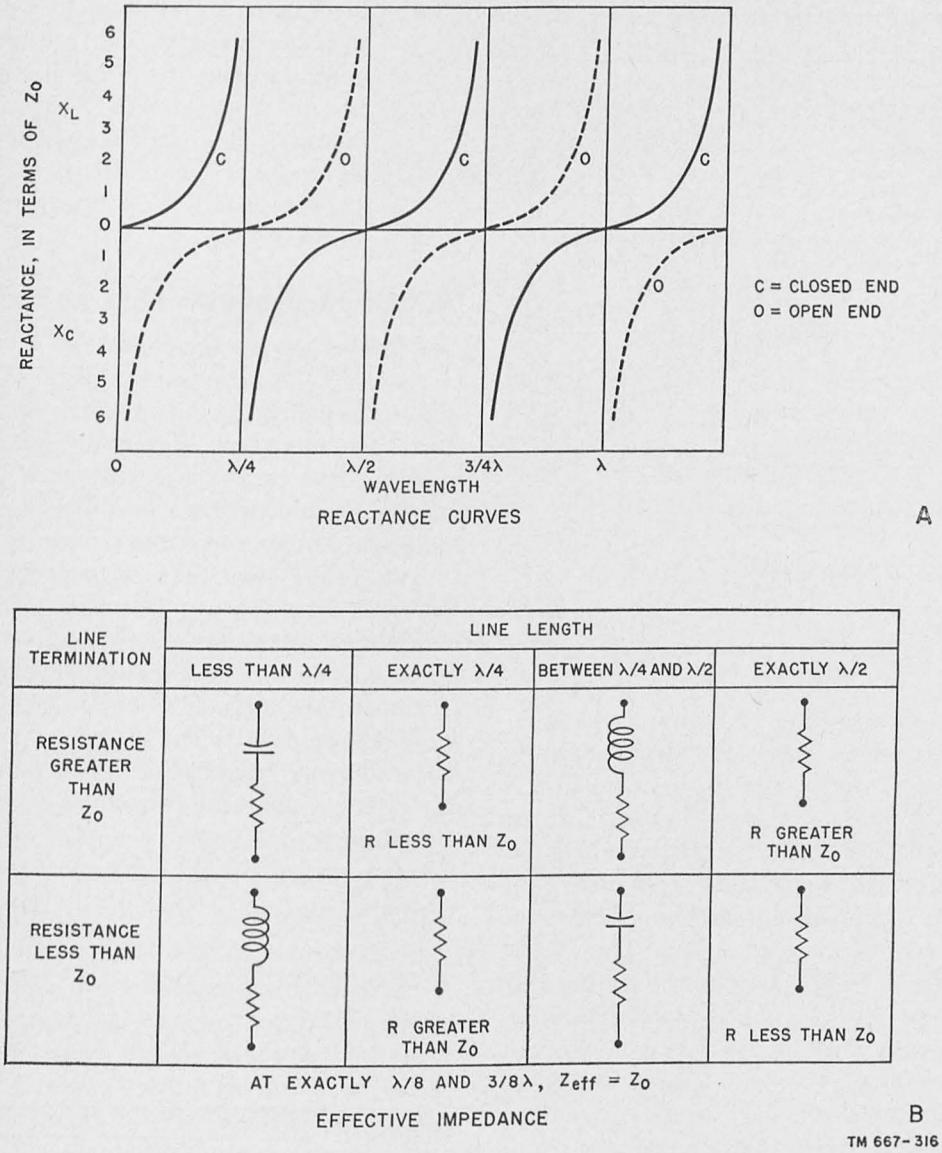

Figure 30. Reactance curves and effective impedance of line section.

voltage or current points are located and the maximum voltage is divided by the minimum to give the swr. The stub then is connected to the line at the point determined from the chart. A closed-end stub always is placed between the last voltage maximum on the line and the *input end*, never between E_{max} and the load end. Usually, a simple final adjustment of stub length completes the matching procedure. If the swr of the line is at least 10 or more, the adjustment of the stub becomes critical. Figure 32 illustrates the effect of stub matching on a line with standing waves. When the line is not stubbed, the source sees an impedance that may be any value depending on the length of the line. Standing waves appear along the line, as shown in A. With the stub attached at the proper point, as in B, the source sees an impedance equal to the characteristic impedance of the line and the resonant section of the line matches the load impedance no matter what its value may be. An alternate method of connecting the stub is shown in C. It is much easier to use single-stub matching with two-wire lines than the coaxial line, because of the greater convenience of measuring the

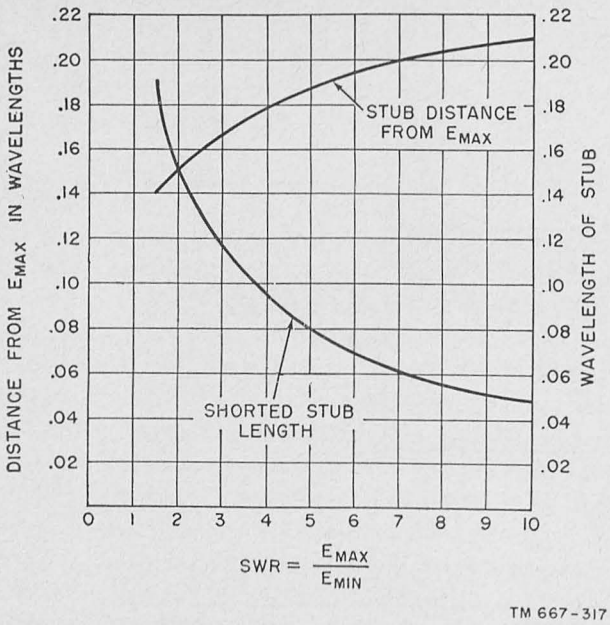

Figure 31. Stub length and position for impedance matching.

swr and attaching and moving the stub. The stub section should be identical physically and electrically to the main line.

(2) *Double-stub matching.* In coaxial lines, the difficulty of moving the stub along the line for final adjustment is eliminated by using two stubs, adjustable in length by means of shorting plungers. These stubs are located anywhere on the load end of the line (fig. 33), but the spacing between the stubs must be exactly an $\lambda/8$ or an odd multiple thereof. The arrangement will not handle the variety of complex load impedances that the movable single stub will handle, but where the swr is not unusually high it is effective and relatively uncritical. The second stub functions as a compensating adjustment, giving an electrical effect which moves the position of the first stub.

(3) *Stubs as impedance transformers.* The matching stub acts, in combination with the short resonant section of line between it and the load, as an impedance transformer. To eliminate the standing waves, it transforms the complex load impedance into a resistive impedance equal to Z_0. Since this is true, the stub may be used also for transforming the line impedance to match the line to the source. The load-matching stub is located and adjusted as already described and a second stub is placed at the input end to match the line to the source in exactly the same manner. Thus, the impedances shown in figure 34 are matched perfectly and the transmission line operates without standing waves.

18. Miscellaneous Uses of Line Sections

a. Converting From Balanced to Unbalanced Impedances. A balanced condition in a transmission line is defined as one in which equal or nearly equal amounts of positive and negative voltages appear above or below a reference point which may be ground or some established voltage. In high-gain antenna systems it usually is essential to have fairly good balance to ground if the intended directive pattern is to be obtained. If such an antenna were connected directly to an unbalanced coaxial line, either the load balance or the line operation or both would be upset. The unbalance would shift the electrical feed point of the load away from the designed point, changing the ohmic value and introducing reactance into the effective load impedance. On the other hand, a balanced load would act as an interruption or *discontinuity* in the line. Any discontinuity in

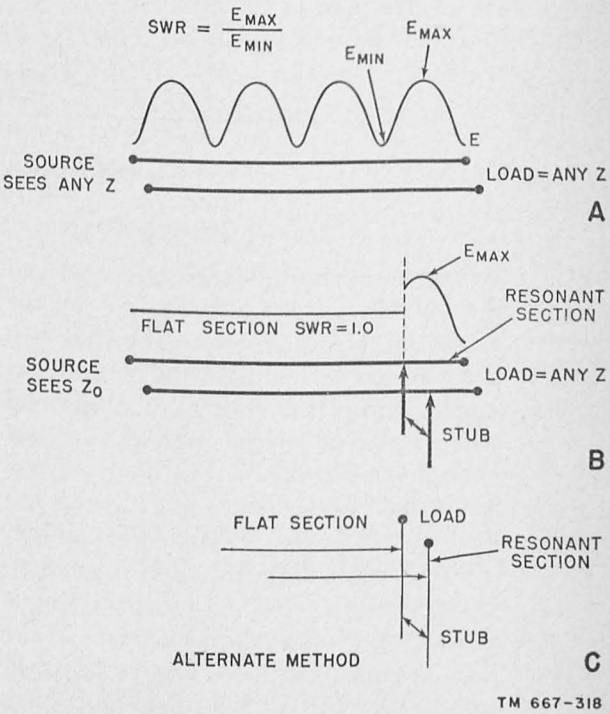

Figure 32. Effect of stub impedance matching.

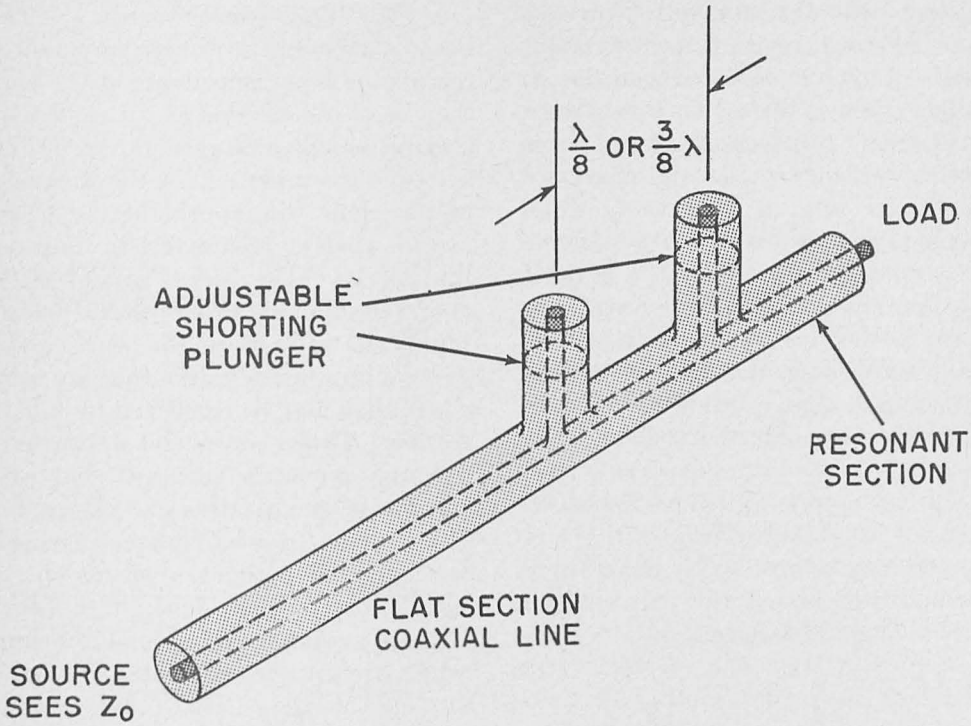

TM 667-319

Figure 33. Double-stub impedance matching.

a transmission line can cause standing waves, put r-f current on the outside braid of the coaxial line, causing unwanted radiation, and couple the load reactance back into the source. All this can happen, even if the impedance of the antenna is purely resistive and matches the line impedance. Obviously some means of converting from an unbalanced to a balanced condition must be used.

(1) When the impedances of the devices to be connected already match and no impedance transformation is desired, a bazooka type of line balance converter, called a *balun*, is used widely. This is a quarter-wave shield which is placed around the end of the coaxial line. A of figure 35 shows a closed-end quarter-wave coaxial section between the detuning sleeve and the outer braid of the unbalanced line. This causes a high impedance to exist between 1 and 2. The inner conductor, 3, is already at high impedance in respect to ground. B shows that 2, which formerly was at ground potential, now is free and its impedance to ground will depend on the load to which it is connected. If 2 and 3 are connected to a balance line, they will assume equal impedance to ground and 1 will be at ground potential. The equivalent circuit, in C, demonstrates the 1:1 transformation in terms of lumped-property components. The bazooka gives excellent performance as long as the operating frequency does not vary more than a

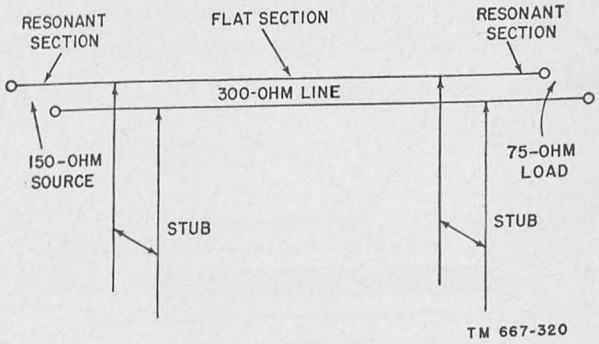

Figure 34. Stubs as impedance transformers.

small percent. It also may be operated in the reverse manner, to convert from a balanced to an unbalanced condition.

(2) Another type of balun or line-balance converter (fig. 35) is the half-wave phase inverter, which acts as an impedance transformer with a 4:1 ratio. Since the phase inverter is a $\lambda/2$, a negative peak appears at 2 every time a positive peak appears at 1, and since both peaks appear on the inner conductor, they have a high impedance in respect to ground. If each peak has a value of 50 volts, measured to ground, the voltage across 1 and 2 is 100 volts. This is a voltage ratio of 2:1, which gives an impedance ratio of 4:1. Like the bazooka, the phase inverter may be operated in either direction and is highly efficient only within a narrow range of frequencies.

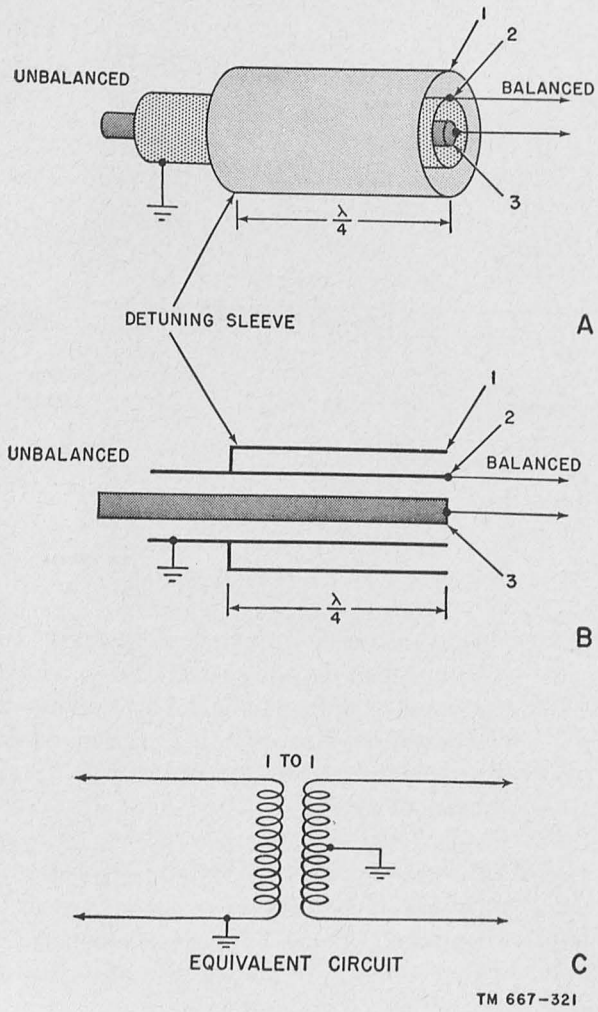

Figure 35. Bazooka line-balance converter.

b. Half-Wave Line Section as 1:1 Transformer. Because a $\lambda/2$ line section or any multiple thereof repeats the input impedance at the output end of the line, it can be used as a 1:1 transformer. If a source having an impedance of 600 ohms is connected to the input end of the line, an impedance of 600 ohms will appear at the output end, no matter what the characteristic impedance of the line may be. The same is true of the load impedance, and its actual value appears unchanged at the input end. Therefore, if a source and load match or have impedance values that are approximately equal, they may be connected by a half-wave line section. This is convenient where source and load are approximately matched, but are separated physically by some distance. By using a line that is a multiple of a half-wave length, the two may be connected without a mismatch. Because no actual matching is done, it is not possible to connect a source and a load the impedances of which are greatly different. Coaxial or two-wire line may be used.

c. Line Sections Used for Time Delay. In electronic apparatus, it may be desirable to have a difference of a fraction of a second between the time an electrical impulse arrives at one point and the time the same impulse arrives at another point. Because of the velocity factor, an electrical impulse is slowed down in a transmission line and requires a definite period of time to travel through a given length (A of fig. 37). Therefore, a time delay can be obtained by using a suitable length of line to connect the two points. The velocity factor must be used to calculate the correct length. Another means for providing the desired time delay is shown in B of figure 37. In this method, the impulse from the source travels a short length of line to arrive at 1, but has farther to go to reach 2. This extra distance provides the time delay between 1 and 2.

d. Line Sections as Phase Shifters. When a time delay between two points is required, it may or may not be necessary to maintain an exact phase relationship between them. When it becomes necessary to produce a definite change of phase, a line section of the appropriate length between the two points can be used, or the lines can be cut to the proper effective difference in the two lengths connecting to the source. Figure 16 illustrates the manner in which phase is shifted progressively from the source toward the output end of the line. For example, if a phase shift of 90° is re-

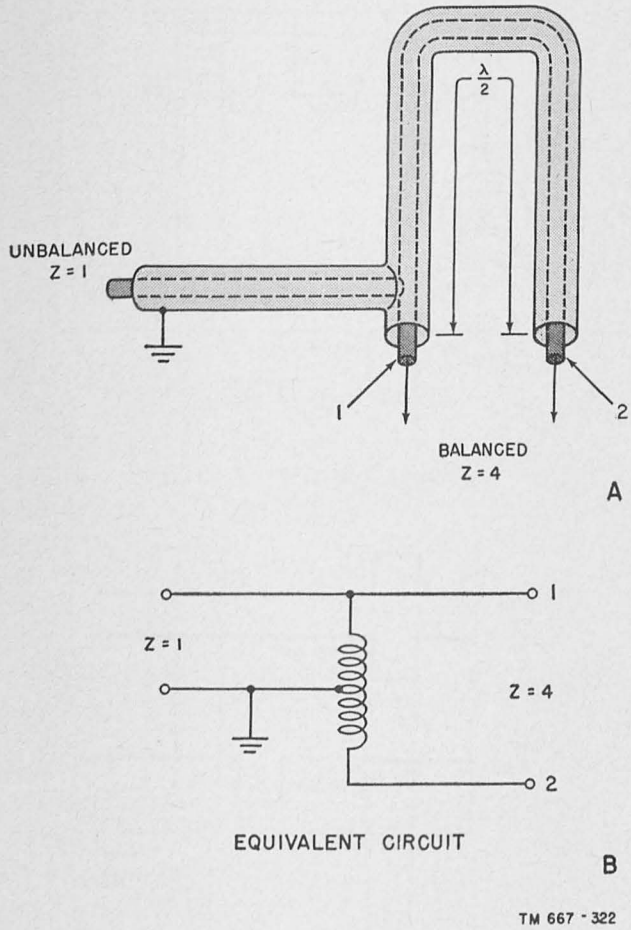

Figure 36. Phase inverter as line balance converter.

quired, the line should be a $\lambda/4$ or any number of full wavelengths *plus* a $\lambda/4$. This is important, because it is possible to use any number of full wavelengths of line to introduce a desired time delay, but the phase shift is determined by the fraction of a wavelength left over at the end of the line.

e. Combined Phase Shifting and Impedance Transformation. A half-wave section of two-wire line, shorted at both ends as shown in figure 38, frequently is used as a phase shifter and impedance transformer. It is referred to as a *half-wave frame*, and an r-f source connected at points 1 and 2 of A of figure 38, or any desired impedance points causes the standing waves of voltage and current demonstrated by curves E and I, which in turn result in the impedance curve Z. The load is tapped on at whatever location offers the proper impedance match, and the phase shift is determined by the distance in electrical degrees between 1 and 3 or 2 and 4. The lowest impedance points are at the shorting bars and the highest at 5 and 6, a $\lambda/4$ away. This makes possible a wide range of transformation ratios. Beyond 5 and 6 the impedance decreases and the current again rises, but in the *opposite* phase. Therefore, there are two points on each conductor which offer the same impedance but different phase relationships. If the load is moved to 7 and 8, the impedance

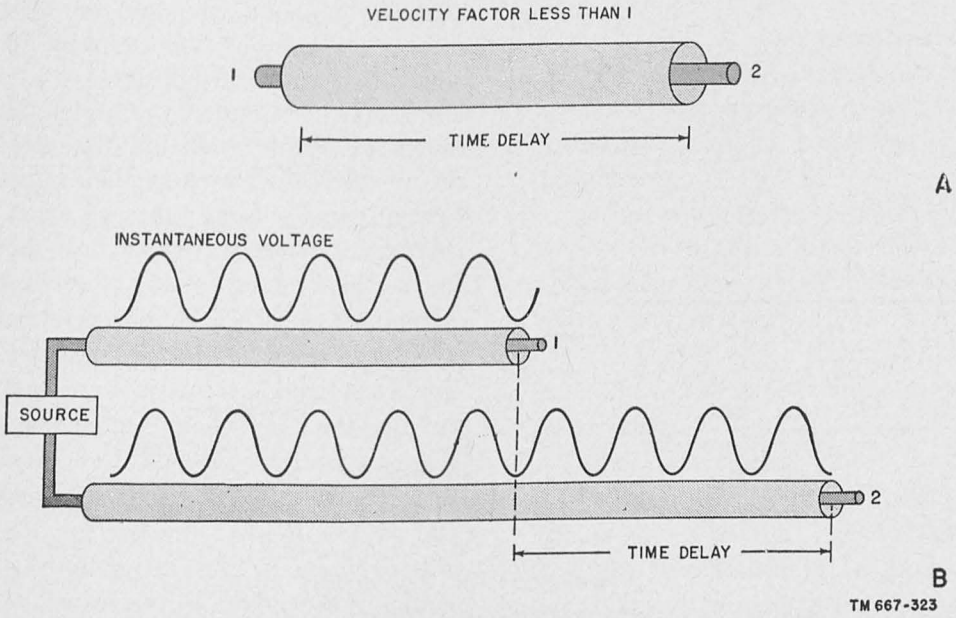

Figure 37. Time delay obtained with line sections.

is the same, but the phase is not. This happens because the half-wave frame actually consists of two quarter-wave sections connected in series. B of figure 38 shows the phase relationships.

f. Line Sections for Energy Storage. A transmission line or a line section also may be used to store pulses of energy in the form of standing waves and deliver them at a desired rate. Delays of approximately 1 or 2 microseconds can be obtained in this manner. Longer times, however, are impractical, because of the length of line that would become necessary. When longer time delays are necessary, it is possible to construct artificial-delay lines (fig. 39) composed of lumped-property capacitance, inductance, and resistance to achieve the same purpose.

g. Line Sections for Switching Functions. In installations where a transmitter and a receiver

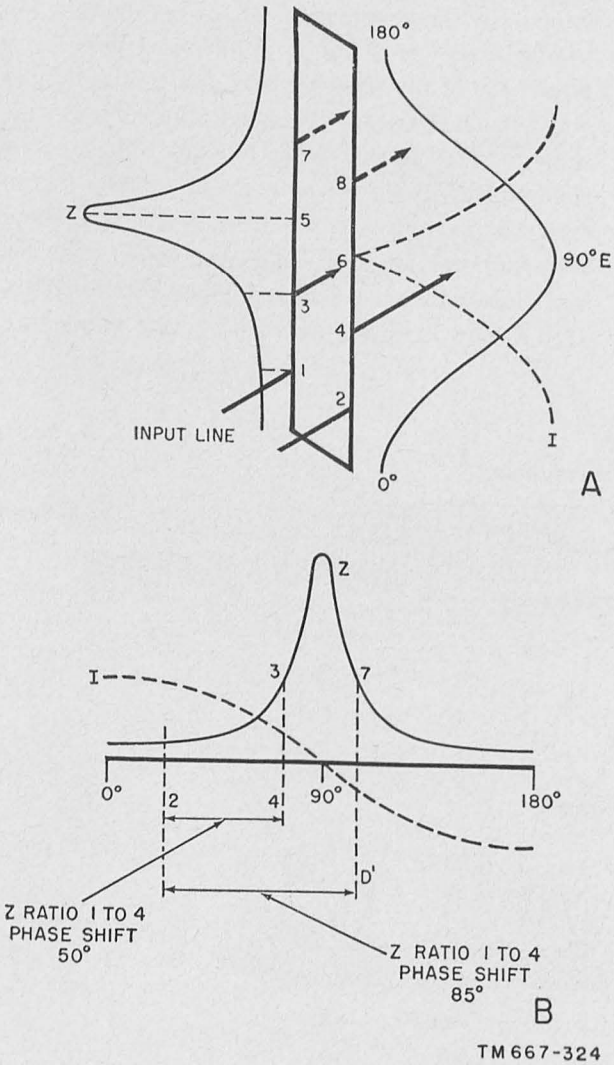

Figure 38. Half-wave frame as phase shifter and impedance transformer.

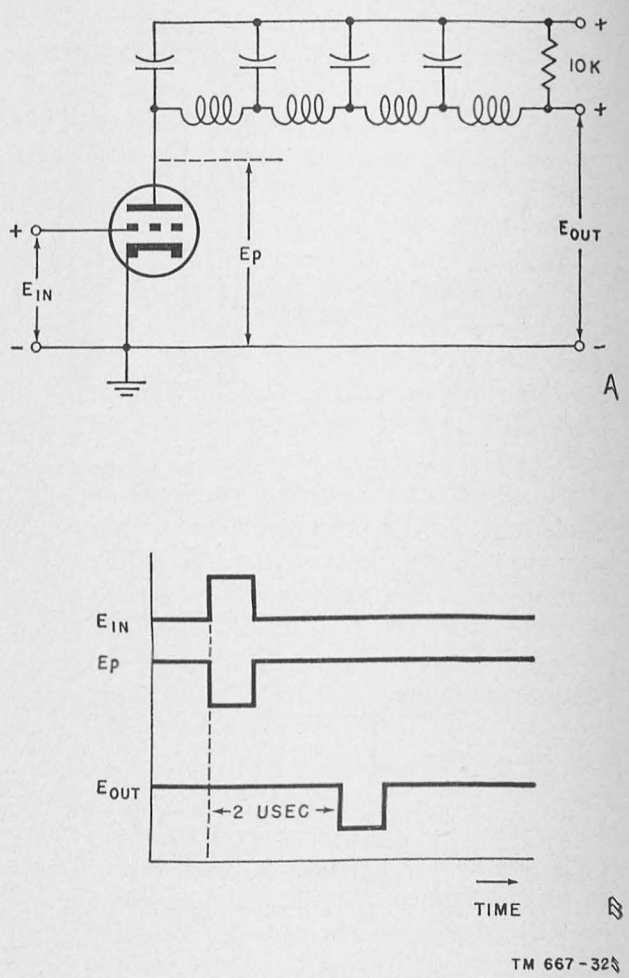

Figure 39. Artificial delay line.

utilize the same antenna, a means must be provided to switch from one to the other. This keeps damaging amounts of power out of the receiver circuits and prevents loss of feeble incoming signals. Mechanical switching is satisfactory in the low frequencies, but in the higher frequencies it causes losses by introducing discontinuities which set up standing waves in the transmission line. Special gas-discharge tubes are used in conjunction with quarter-wave and half-wave resonant-line sections (A of fig. 40) to solve this problem. At point X, which is close to the transmitter, the line to the receiver is tapped off. On the receiver line, a $\lambda/4$ from X, a tube is connected which short-circuits the line when excited by sufficient r-f energy. Another special tube is connected a short distance from X toward the transmitter, at the end of a half-wave line section inserted in one side of the main line. B of figure 40, shows the action of the switch in the transmitting position. The tube in the $\lambda/2$ section causes a short circuit

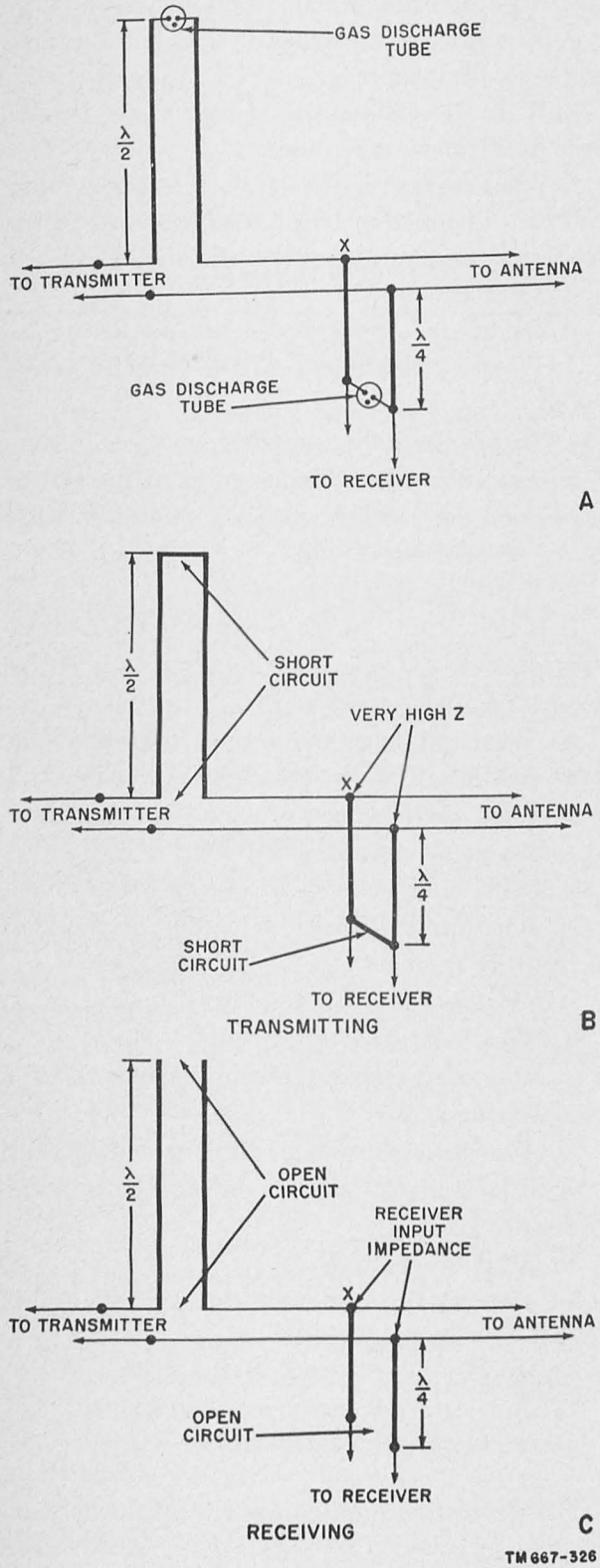

Figure 40. Line sections for switching functions.

which is reflected back to complete the main line. The energy from the transmitter then enters the receiver line and causes the tube there to discharge, but this creates a $\lambda/4$ closed-end line section between the tube and X, which offers a high impedance at the input end. Only enough energy is admitted to keep the gas tube discharging and none can get through to damage the receiver. As soon as the transmitted energy is interrupted or stopped, both tubes become open circuits, as shown in C of figure 40. Incoming r-f signals, which might otherwise be lost in the transmitting circuits, find an open circuit toward the transmitter. Since received signals are too weak to energize either tube, there is no danger of conditions being reversed.

19. Summary

a. Because of their lower r-f resistance and mechanically simple construction, sections of transmission line may be made to act as very efficient and stable series- or parallel-resonant circuits and as low-loss reactances.

b. At frequencies in the 30- to 1,000-mc range, it becomes increasingly difficult to construct lumped-property elements that have good stability and high Q. At these frequencies, however, wavelengths are relatively short, so that line sections of desirable properties are not too bulky for practical use.

c. Because of their physical construction, two-wire line sections commonly are used in balanced circuits, coaxial sections in unbalanced circuits.

d. Coaxial-line sections are self-shielding and therefore may be used throughout this frequency range, whereas practical two-wire types begin to show serious radiation losses above 300 mc.

e. The line sections usually are not pieces of actual transmission line, but units having the same electrical characteristics, specially constructed for mechanical rigidity and desired characteristic impedances.

f. Close-end $\lambda/4$ line sections and odd multiples thereof behave as parallel-resonant circuits, which makes them useful as vacuum-tube circuits impedances, particularly as grid and plate-tank circuits.

g. They offer very high impedance to the source, and require little power from the source to maintain the effect.

h. The inverting action of the basic quarter-wave line section finds use in impedance transformation. A wide range of transformation ratios may be obtained by tapping on to the line section at the desired impedance points, and almost any source and load may be matched by this means.

i. Closed-end $\lambda/4$ sections also may be used as the frequency-control tank circuit of oscillators, and as metallic insulating support for transmission lines.

j. Open-end quarter-wavelength line sections act as series-resonant circuits and offer low impedance to a narrow range of frequencies at resonance.

k. They are effective as band-pass filters and are used alone or with other types of filters to suppress even harmonics in transmission lines.

l. The actual impedance at resonance depends on the Q, which can be made very high.

m. Nonresonant line sections shorter than quarter-wave and between quarter- and half-wave act as almost pure reactances with very low losses.

n. This characteristic offers a means of eliminating undesirable standing waves on transmission lines by cancelling out the reactive component of a poorly matched load. The arrangement is called stub matching.

o. Stubs also act as impedance transformers and are used to make a line of any characteristic impedance look like the right value to both source and load.

p. Line sections can be used for converting from balanced to unbalanced conditions, phase shifting or inverting, providing time delays, storing energy, and switching.

q. The chief considerations in the construction of line sections are efficiency, stability, and low losses, which are relatively easy to obtain in high-Q line sections of good physical design.

r. The Q of a line section used as a parallel-resonant circuit can be two to five times that attainable with conventional lumped-property elements.

20. Review Questions

a. What is a complex impedance?

b. Can distributed properties be used at any frequency in the spectrum?

c. Give three uses for line sections.

d. How are the properties of L, C, and R represented in a transmission line?

e. What determines the characteristic impedance of a transmission line?

f. What are the phase relationships at the input end of a line section if a resistance equal to the characteristic impedance on the line is placed across the output end?

g. Define the term *nonresonant line.*

h. What is the definition of swr (standing wave ratio)?

i What is the reflection coefficient?

j. When the input frequency to a line section is constant and the line section is shortened, what is the effect on the circuit?

k. Define velocity factor.

l. If the velocity factor is equal to .875 and the frequency is 235 mc, how long will a $\lambda/4$ line section be at this frequency?

m. What are the advantages of a resonant-line tank circuit? The disadvantages?

n. What are the effects of closely spacing large-diameter conductors in a two-wire line?

o. Name three methods of tuning coaxial lines.

p. What are the effects of loading on the Q of a two-wire resonant line?

q. What is a metallic resistor?

r. What is broadbanding?

s. How is the characteristic impedance of a line determined?

t. What is the purpose of a line-matching stub?

u. How is a stub used as an impedance transformer? Explain.

v. What is a balun?

w. How can line sections be used for time delay? For switching functions?

CHAPTER 4

CIRCUIT ELEMENTS—LUMPED-PROPERTY COMPONENTS

21. Lumped-Property Components

a. General. A lumped-property component is an electronic part in which a definite amount of capacitance, inductance, or resistance exists, usually with relatively little of either of the other properties present. Capacitors, coils, and resistors used in radio equipment operating at frequencies below 30 mc generally are lumped-property components. For the purpose of this manual, it is necessary to make a careful distinction between lumped-property components and distributed-property components. Lumped-property components in the 30- to 1,000-mc band are used as coupling devices, bypasses, blocking devices, and in many other ways.

b. Advantages. In circuits where the required efficiency, stability, and other factors permit, lumped-property components are used in preference to distributed-property circuit elements. Lumped-property components are small and compact in proportion to the amount of the desired property they provide. They also are reasonably efficient electrically, readily available, and relatively easy to install, adjust, and replace. All of these features make them well suited for use in equipment which must be compact, such as portable field radio sets, walkie-talkies, and airborne communications gear.

c. Disadvantages.

(1) As the frequency of operation is raised, the electrical loss in lumped-property components increases, until a frequency is reached where this increasing loss cannot be tolerated. The increased loss is actually a combination of three distinct effects—dielectric loss, r-f resistance loss, and radiation loss. Loss in even the best dielectric materials increases with frequency, because a definite amount of the applied electrical energy is lost in each cycle, and the more cycles that occur in a unit of time, the more heat is generated in the dielectric. The r-f resistance loss also increases with increasing frequency, because of skin effect.

(2) Some loss occurs in any r-f circuit because of the direct radiation from the parts. This loss usually is negligible, so long as the circuit is not more than about $\frac{1}{10}$ of a wavelength in any physical dimension. With increasing frequency, however, it becomes impossible to scale the components down in physical size in proportion to the decreasing wavelength, and radiation losses increase. The addition of shielding around the circuit also causes energy to be lost in heating the shield, rather than by radiation.

d. Upper Frequency Limit.

(1) There is no definite upper frequency limit at which it becomes necessary to change over from lumped- to distributed-property components. In the broad region from about 75 mc to perhaps 500 mc, satisfactory circuits can be constructed using either type of component. If compactness and portability are most important, lumped components are used, but where greatest stability and efficiency are needed, distributed-property components are chosen.

(2) The filter shown in figure 41 consists of lumped properties and is designed to be connected to a transmission line between the transmitter and the antenna, to prevent harmonics of the transmitter output frequency from reaching the antenna and being radiated. It will pass all frequencies below about 35 mc, and attenuate all frequencies above the cut-off frequency. This prevents harmonics of communication transmitters operating at 30

221643°—52——6

mc and below from interfering with services operating above 35 mc. At the relatively low cut-off frequency of 35 mc, either a lumped-property or a distributed-property filter can be made efficient enough to eliminate almost all of the undesired harmonic radiation from the antenna. However, if the cut-off frequency were in the upper part of the 75- to 500-mc transition range, a filter made from suitable sections of transmission line would be more efficient. There is no electrical reason for not using distributed-property circuit elements through the full range of frequencies where use of lumped-property elements ordinarily is standard. The principal reason lumped-property components are preferred is that the physical size of distributed-property elements becomes awkward, except in special cases where the elements can be folded mechanically, or where space is no problem, as in large permanent installations.

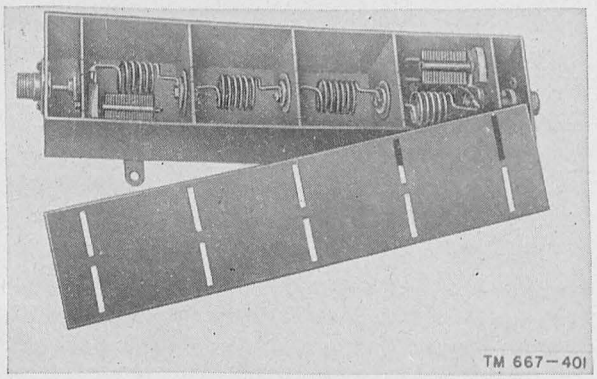

Figure 41. Low-pass filter using lumped components.

22. Capacitors

a. General.

(1) All capacitors, of any size, type, or construction, have characteristics that cause them to behave in a way unlike the theoretical ideal capacitor, which would have pure capacitance, and no inductance or resistance. Practical capacitors actually have some series inductance because of their leads and internal metallic foil plates. This inductance is effectively in series with the actual capacitance as shown in the approximate equivalent circuit of figure 42, where C represents the actual capacitance, L the inductance of each lead, and R the effective r-f series resistance of the leads and foils.

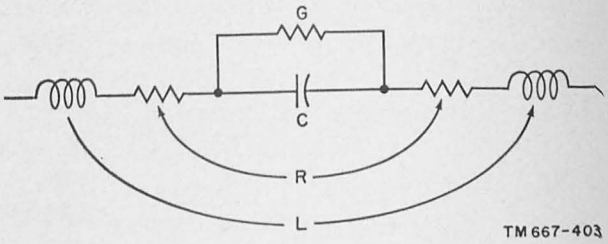

Figure 42. Equivalent high-frequency circuit of a capacitor.

(2) Losses in the dielectric are represented by the shunt conductance, G. Below 10 mc, this is seldom serious, even in ordinary paper capacitors, and in high-quality mica and ceramic units it has no serious effects at the highest frequencies. Since capacitors have a small but significant amount of inductance in series with the actual capacitance, there must be a resonant frequency at which the reactances of the inductance and capacitance become equal, and cancel each other. The general impedance-versus-frequency characteristics of a capacitor are shown in figure 43, for frequencies ranging from below to above series resonance. The curve of reactance versus frequency for a capacitor is shown in figure 44. The reactance becomes capacitive at series resonance, and grows larger as the frequency decreases. The opposite effect takes place above resonance, where the reactance is inductive, and grows larger with increasing frequency.

b. Common Fixed Capacitors at High Frequency. The common types of electrolytic, mica, paper, and ceramic capacitors are subject to in-

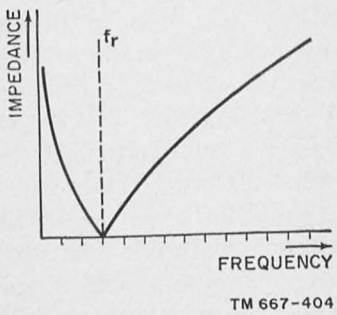

Figure 43. Impedance of a capacitor at frequencies above and below resonance.

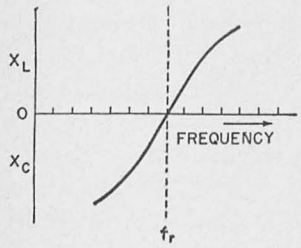

TM 667-405

Figure 44. Reactance versus frequency.

creasing losses as the operating frequency is increased.

(1) In electrolytic capacitors, these losses and the inductance of the leads and internal foil strips that form the plates make them practically ineffective as capacitors at frequencies above a few megacycles. Even in equipment operating in the region below 30 mc, electrolytic capacitors usually are shunted with a suitable value of paper or mica capacitor, which bypasses the higher-frequency currents around the electrolytic unit.

(2) Paper capacitors also are subject to serious losses as the frequency is raised, but not to so severe an extent as in electrolytic units. The series inductance of paper units is large, and causes them to become series-resonant at frequencies ranging from 1 to 10 mc, depending on the capacitance and lead length.

(3) Mica capacitors, because of their lower losses and smaller series inductance, have an extended range of usefulness. Average types become series-resonant at frequencies from 10 to 100 mc, depending on the capacitance value and lead length.

(4) Ceramic capacitors are a more recent development and have improved properties in certain respects. Their losses are often lower than those of mica units, and their design permits a much lower series inductance. As a result, their series resonance may be as high as 400 or 500 mc in some units, and this, together with their stability and low losses, makes them the preferred unit in many applications. Figure 45 shows examples of the common types of capacitors described.

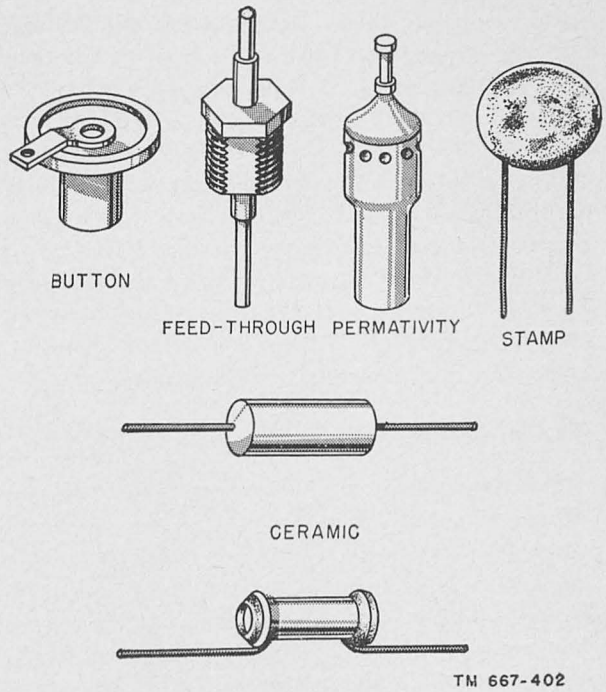

TM 667-402

Figure 45. Typical fixed capacitors.

23. Improvements in Fixed Capacitors

a. General. Changes in the materials and design of capacitors have been made to adapt them for more effective performance at frequencies above 30 mc. In general, since capacitors do not behave as capacitors above their own resonant frequency, most of the improvements made have been with a view to raising the resonant frequency. The greatest improvement resulted from the development of ceramic materials that made possible ceramic-dielectric capacitors with only two plates, as compared with the many interleaved foils necessary in paper and mica units. Ceramics also made possible capacitors with various temperature coefficients which can be used to improve the stability of critical circuits.

b. Material and Design Changes. Various ceramic materials, such as barium and strontium titanates, have been found to have high dielectric constants and good dielectric strength. By plating or firing silver electrodes directly on thin plates of this dielectric material, air and moisture are prevented from getting between the plates of the capacitor. This results in greatly improved stability. By varying the mixture of the ceramics, the temperature coefficient of the capacitor can be

made negative, zero, or positive, as desired. Ceramic capacitors then can be used to compensate for frequency drift caused by changes in other components with changes in temperature. Skin effect is reduced by using short, heavy leads, and losses caused by surface leakage and humidity are minimized by sealing the surface with a baked silicon lacquer. A similar process of plating or coating the silver electrode on mica also has been developed for the manufacture of mica capacitors, with considerable improvement in their stability and high-frequency performance.

24. Improved Variable Capacitors

Improved designs have increased the efficiency of variable capacitors for use in the frequency range from 30 mc up. Common types of variable capacitors become less efficient as the frequency is raised, because of increasing losses in the dielectric material and increasing r-f resistance loss in the leads and plates, particularly in the lead to the rotor, which makes a wiping contact with the rotor shaft. The resistance and inductance of the rotor lead can be reduced somewhat by using two or more leads in parallel, but this arrangement has mechanical limitations.

a. Butterfly Capacitors. Variable capacitors for use at 30 mc and above often are made in the *butterfly* design (fig 46). The external circuit is connected to the two sets of stator plates, and the rotor serves to increase or decrease the total capacitance between them. Thus, no r-f current need flow through a wiping contact, and the problem of inductance of the rotor wiper is removed also. The shaft and rotor can be insulated from ground when required, which permits a greater variety of applications. Improved dielectric materials, such as polystyrene, Teflon, Steatite, and similar products, are used as the supporting dielectric material. The effects of the dielectric material on the Q of a variable capacitor can be seen in figure 47, where curves A, B, and C show Q versus frequency of a typical small variable capacitor. The curves for *A* and *B*, the higher quality dielectrics, decline relatively slowly, whereas the curve for dielectric *C* drops rapidly to such a low value as to be practically useless above 30 mc.

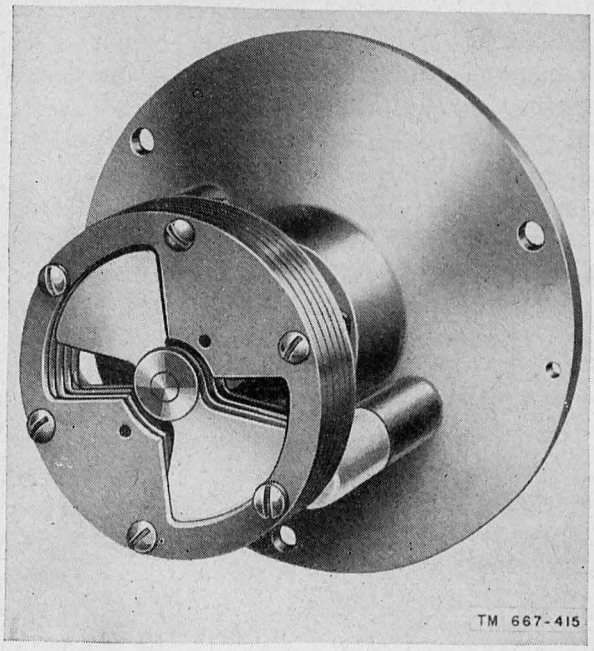

Figure 46. Butterfly capacitor.

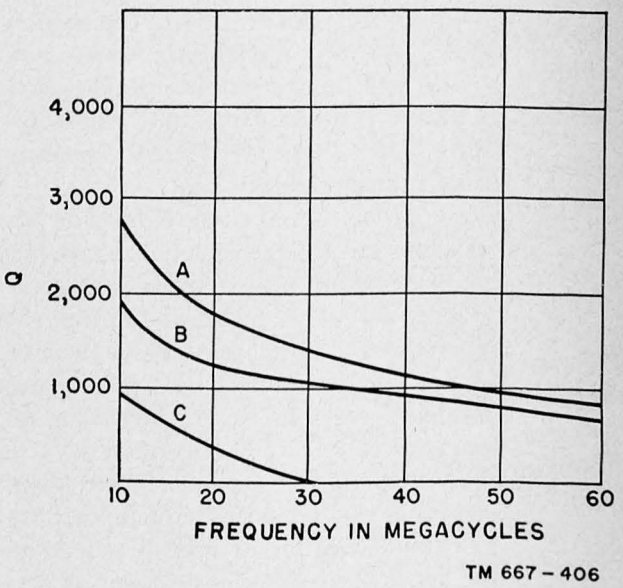

Figure 47. Variable capacitor Q versus frequency.

b. Other Capacitor Designs. Other practical variable capacitors for use at frequencies above 30 mc are the tubular and disk types in figure 48. Because of the relatively small values of capacitance required, these types can be used for neutralizing capacitors, and for the tuning of tank circuits made of line sections. Capacity is varied by changing the spacing between the plates and, because the plates have large conducting areas which minimize r-f resistance loss, the efficiency of such capacitors is good. The dielectric material is kept out of the most intense part of the field which also helps to produce high Q.

c. Butterfly-Tuned Circuit. In addition to improving variable capacitor designs, an improved

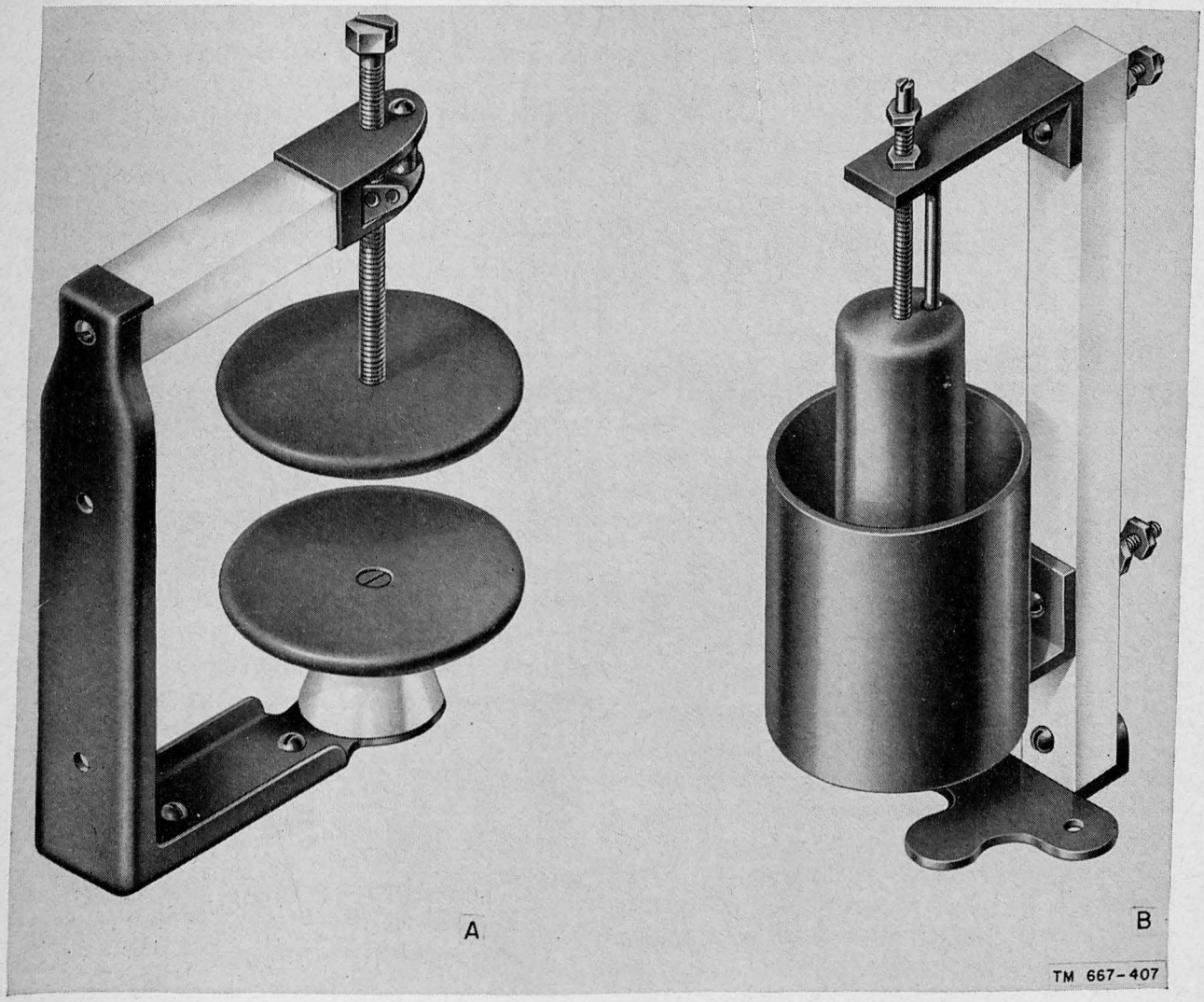

Figure 48. Tubular and disk variable capacitors.

circuit consisting of a combined variable capacitance and inductance (fig. 49) has been developed. The interleaved plates act exactly as in the butterfly capacitor, but with an additional effect. The two groups of stator plates are connected by extensions of themselves in the form of curved strips, which act as an inductor in a parallel-tuned circuit. When the rotor is turned as in A of figure 49, so that its plates are no longer intermeshed with the stator plates, the capacity between opposite groups of stator plates is reduced. The inductance of the curved connecting arms is reduced also, by the proximity of the rotor plates. This combination of effects makes it possible for such units to tune with good Q across a relatively wide frequency range. Connections are made to points 1 and 2, as shown in the equivalent circuit in B of figure 49.

25. Inductors

a. General. Any two points between which a difference of potential can exist may be said to have capacitance. If two points directly opposite each other on adjacent turns of an inductor are considered, it is seen that a difference of potential can exist between them because of the impedance of the length of the conductor connecting them. All inductors have some distributed capacitance between turns, which appears as a small capacitance in parallel to the external circuit. This capacitance is usually so small in proportion to the tuning capacitor connected across the coil that it can be neglected. As the frequency is raised, however, the effect of this distributed capacitance no longer can be ignored.

b. Frequency of Maximum Q. In the range of frequencies where the distributed capacitance can

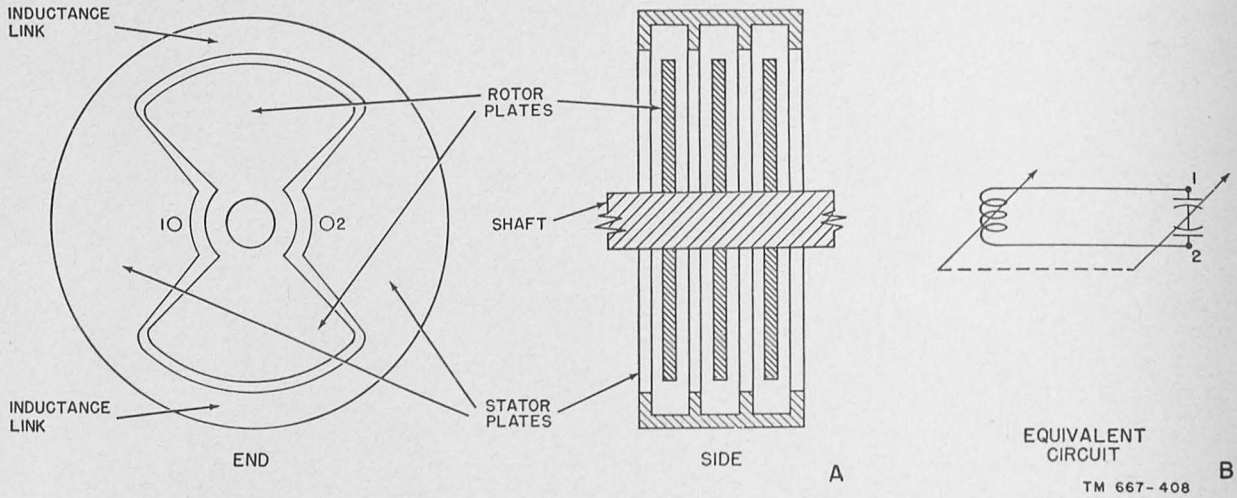

Figure 49. Butterfly parallel-resonant tuning circuit, and equivalent circuit.

be ignored, the inductive reactance increases directly with frequency. The r-f resistance losses caused by skin and proximity effect, the dielectric loss, and the hysteresis losses in iron-dust cores also increase with frequency. The net result of this behavior is that the Q of practical inductors has a maximum value at some frequency, and declines gradually above and below this point. The point of maximum Q usually is designed to fall within the range of frequencies over which the coil is to operate.

c. Self-Resonance. When the applied frequency is increased to a point where the distributed capacitance of the coil resonates with the inductance, a new effect appears. The coil becomes a parallel-resonant circuit (fig. 50) to an external circuit connected to its terminals. The resistance in this equivalent circuit represents the losses incurred in practical coils.

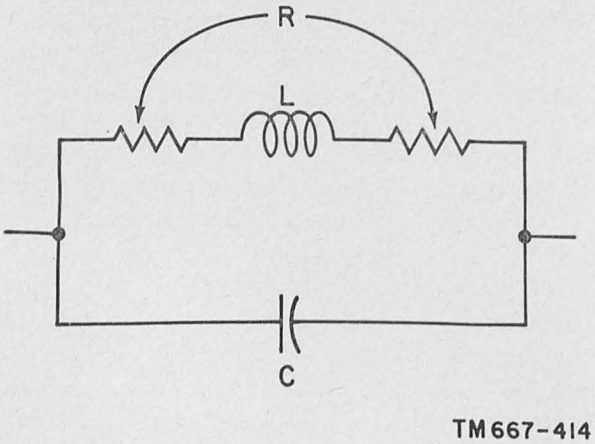

Figure 50. Equivalent circuit for inductor at high frequencies.

d. Impedance and Reactance. The impedance and reactance of an inductor at and near the frequency of self-resonance is shown in figure 51. At resonance, the impedance is highest and purely resistive, whereas below resonance it exhibits inductive reactance, and above resonance, capacitive reactance. The impedance curve has the familiar shape of tuned circuit parallel resonance, the sharpness of the peak being determined by the over-all Q of the inductor and its distributed capacitance.

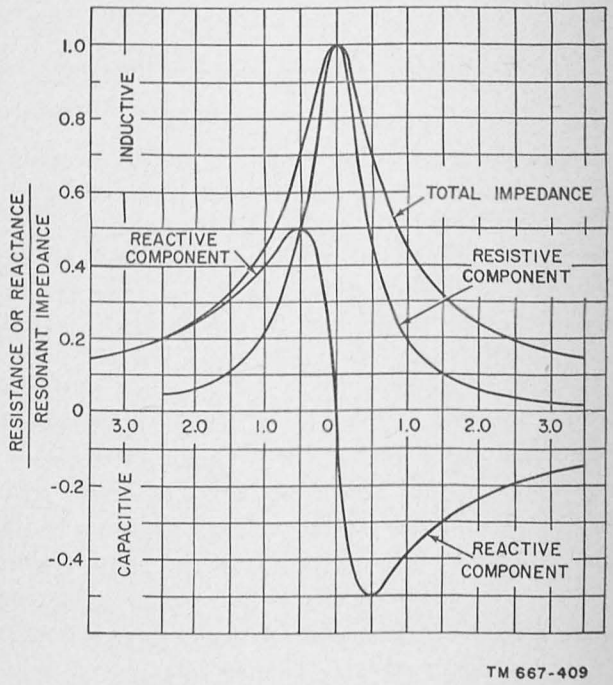

Figure 51. Impedance of inductor.

e. Practical Use of Self-Resonance. The graph of figure 51 shows that any inductor will become parallel-resonant with its own capacitance at some frequency. This characteristic is used in many applications in vhf communications receivers. The inductor can be made to resonate with its own self-capacitance, plus the tube input, and stray circuit capacitance. This eliminates the need for a separate tuning capacitor and provides the highest possible L-C ratio, the largest load impedance, and the greatest stage gain. Self-resonant inductors often are used in the intermediate-frequency amplifiers of communications and radar receivers. Such amplifiers are designed to operate in the frequency range between 30 and 300 mc, depending on the requirements of the particular radio system concerned. If adjustable tuning is required, it can be accomplished by varying the inductance either by a switching arrangement or with an adjustable core (slug) of iron-dust-impregnated plastic.

(1) A series of inductors is shown in the switching arrangement in figure 52. Such circuitry is often more compact and stable under severe service conditions than are more conventional arrangements with standard types of variable capacitor tuning.

(2) A similar use of the self-resonance characteristic of an inductor is made in r-f chokes designed to offer a high impedance over a moderate range of frequencies. Such chokes have a medium Q, and are self-resonant at the approximate center of the frequency band they are designed to block. This provides a relatively high impedance across the band with a small d-c supply voltage drop. This type of self-resonant inductor (fig. 53) is not usually adjustable.

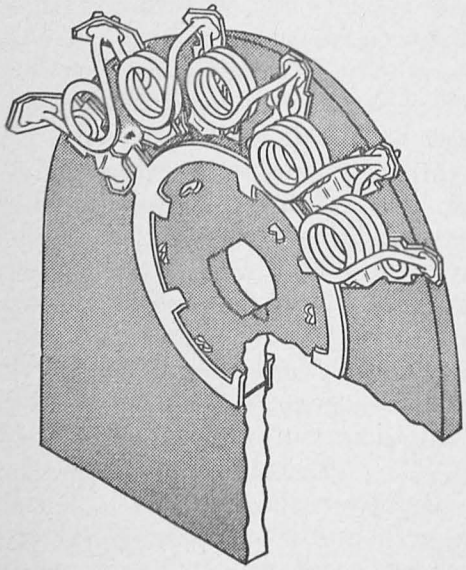

TM 667-417

Figure 52. Switch inductor used in television tuners.

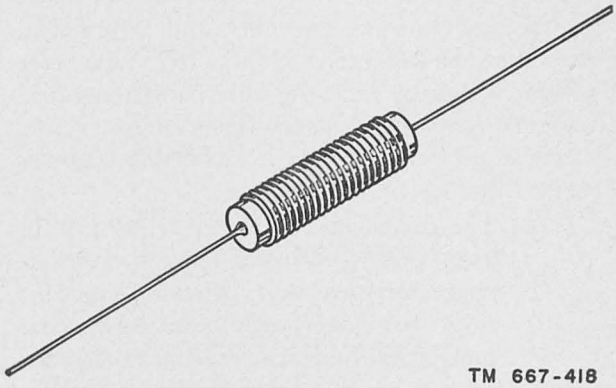

TM 667-418

Figure 53. Self-resonant choke.

f. Design Factors. Many factors must be considered in designing inductors for use at very high frequencies. Since the inductor must have a certain power-handling capacity, the conductor size must be large enough to handle the required power. The form factor which is the ratio of the length of the winding to its diameter influences the Q, and therefore must also be maintained within given limits. Dielectric losses and distributed capacitance must be reduced to a practical minimum. The inductance also must be made considerably smaller in order to resonate with the smaller capacitance used at high frequencies and to maintain the required L-C ratio for the particular application. A single turn of wire may provide sufficient inductance for this purpose, but a serious additional loss is introduced if the length of the single turn is near the wavelength of the operating frequency. When this condition occurs, the inductor acts like an antenna and radiates a portion of its field energy, resulting in a loss of power and an attendant reduction of Q. These contradictory factors make the design of lumped values of inductance more difficult than the design of lumped capacitance. Above the 400- to 500-mc region, lumped-property inductors are impractical, and tuned-tank circuits generally consist of distributed-property elements or special lumped-property units.

g. Practical Modern Inductors. Throughout the 30- to 500-mc range in which lumped-property inductors may be used, the only type winding of practical importance is the slug-tuned single-layer solenoid (fig. 54). The bank, universal, and progressive windings used for medium- and low-frequency coils have too much distributed capacitance and proximity effect to provide the necessary efficiency. The single-layer solenoid winding is also more efficient for use at the lower frequencies, but its size becomes unwieldy and impractical below perhaps 3 or 4 mc. Even in the single-layer solenoid winding, a careful balance between conductor size, spacing between turns, diameter, and length is necessary to attain reasonable Q in the range from 30- to 500-mc.

(1) For frequencies up to 100 or 150 mc, the use of powdered-iron cores of appropriate characteristics will provide somewhat improved Q, and such inductors are common in equipment operating in this frequency range. Cores in which the size and distribution of the particles of magnetic material are optimum for the frequency range concerned improve the Q; they increase the inductance of the coil without causing the losses to increase in proportion. It is important to remember that cores designed to give optimum Q in one part of this frequency region will not be equally efficient in another part of the band. For this reason, any interchanging or replacement of cores in such inductors must be done with caution, or the performance of the equipment may be changed.

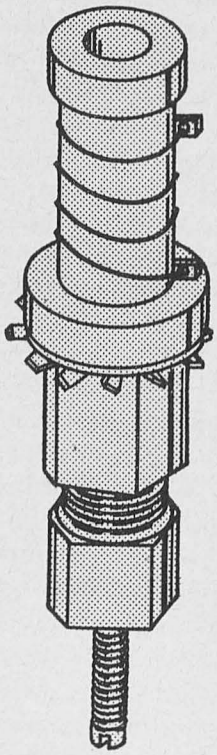

TM 667-419

Figure 54. Slug-tuned inductor.

(2) In transmitter circuits, the inductor must handle considerable power without serious heating. This requires a coil of larger physical size (fig. 55) and usually makes the use of iron-powder cores impractical because such cores tend to saturate magnetically, and lose efficiency as the power level increases. In a few special applications, it is desirable to use a lumped-property inductor that has extremely small change of inductance with temperature. The change of inductance with temperature in common inductors is caused by the thermal expansion of the unit as a whole, which usually causes the inductance to increase. To minimize this effect, special inductors are made of metals such as Invar, which have low expansion per degree of temperature change, as compared with ordinary materials such as copper, aluminum, or silver. Since the conductivity of Invar and such special alloys is low, these coils must be plated with copper or silver. The current actually is carried almost entirely in the silver or copper plating because of skin effect, and a high Q results; yet the thermal expansion is held to a minimum. Coils of this type are used mostly in measuring equipment such as signal generators and frequency meters, where their added cost is justified by the improved stability they provide. Slug-tuning of equipment operating in the 30- to 500-mc range can be accomplished also by a tube or cup of metal other than iron. This reduces the Q of the coil slightly, because the slug acts as a shorted turn or loop of wire coupled to the coil by magnetic linkage. In circuits where extremely high Q is not required, such a slug is used for adjusting the inductance

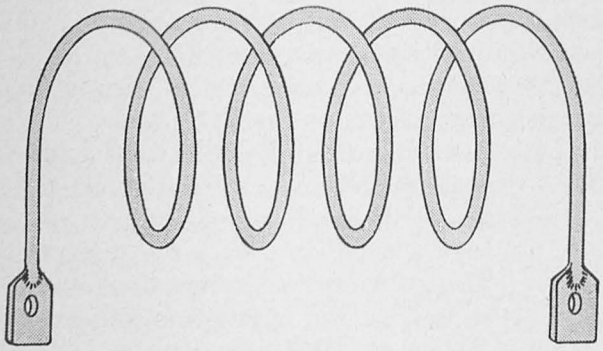

TM 667-420

Figure 55. Air-wound self-supporting transmitting inductor.

of the coil, and thus tuning the circuit over a moderate range.

26. Resistors

a. General. The effects of increasing frequency on the performance of some types of resistors are such that the resistors cannot be used efficiently at frequencies of 30 mc and upward. Wire-wound resistors that are used at low frequencies become useless above this range because of unavoidable inductance and capacitance, which introduces unwanted reactive or resonant effects. Therefore, composition resistors made of finely divided carbon in a suitable binder are most commonly used in this frequency range.

(1) For practical purposes, the simple equivalent circuit shown in figure 56 illustrates the effective impedance of a composition resistor at high frequencies; this equivalent circuit generally is used in the design of vhf and uhf circuits. R_p is the reciprocal of the conductance and is referred to as the *parallel resistance.* The total effective capacitance, C, is caused by the capacitance between the leads, and the effect of distributed capacitance. A generally accepted theory suggests that, at very high frequencies, a carbon resistor behaves much like a closed-end transmission line half as long as the resistor.

(2) Laboratory measurements of commercial composition resistors agree fairly well with theoretical predictions for frequencies up to 200 mc. Above this frequency, the performance begins to depart from that predicted by theory because of additional dielectric losses in the material which holds the carbon particles together. These losses cause a decrease in the effective r-f impedance. The value of capacitance depends largely on the physical shape and size of the resistor, increasing as the cross-sectional area is increased, or as the length is decreased. For example, the measured resistance of some 1-watt, 10,000-ohm commercial resistors at 60 mc ranges from 6,700 ohms to 9,100 ohms, depending on their design and physical characteristics. In general, resistors below about 10,000 ohms exhibit a smaller percentage decrease in resistance value with increasing frequency than do the larger resistance values.

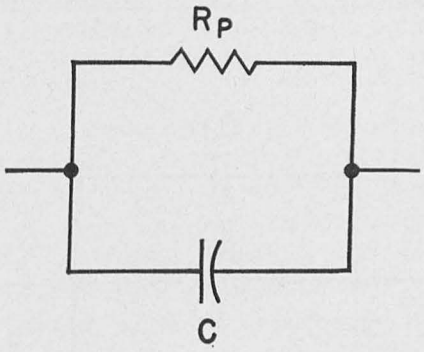

TM 667-411

Figure 56. Equivalent circuit for composition resistor at high frequencies.

(3) The theory summarized above does not describe the behavior of the so-called filament type resistors. These are made with a coating of the resistive material on the outer surface of a small glass tube, the entire structure being inclosed in an outer insulating sleeve of molded insulating material. The leads connecting to the resistive coating are allowed to extend inside the glass tube until the ends almost meet at the center. This construction is used so that the lead wires can aid in carrying away the heat generated in the resistor body. The effect on the performance at vhf is to add considerably more shunt capacitance. The designation *filament type* for resistors of this

construction is rather misleading, since it refers to the thin filament appearance of the resistive-material-coated glass tube, which cannot be seen after the outer molded insulating coating is in place. A cross section of such a resistor is shown in figure 57.

(4) The method of mounting a resistor may also affect its performance because of additional shunt capacitance between one or both leads and ground. Figure 58 shows these values represented by C_a and C_b, and C_d is the total end-to-end capacitance of a unit mounted parallel to and fairly near a chassis or a metal shield. If one end of the resistor is grounded, either C_a or C_b disappears, but the length of the ungrounded lead has a sharp effect on the total capacitance. Care must be taken that C_a does not become large enough to act as a capacitive shunt to ground.

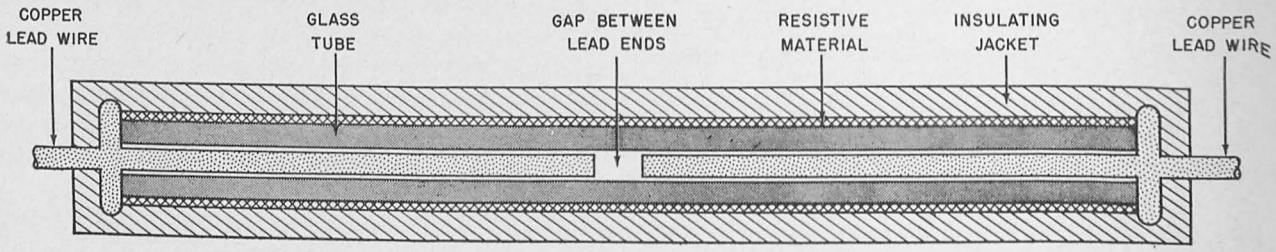

Figure 57. Filament type resistor.

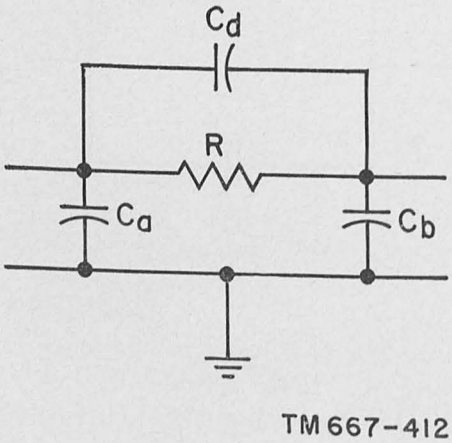

Figure 58. Equivalent circuit for resistor, including capacitance to ground.

b. Specialized Types. Special types of composition resistors which have fairly good high-frequency properties have been developed specifically for such applications. The primary aim is to reduce the capacitance and inductance. This minimizes the undesirable reactive effects as the frequency changes and permits the effective impedance to remain more nearly constant.

(1) A modification of the filament type resistor has been developed that eliminates the bulky end caps and the part of the leads extending within the glass tube. This reduces the distributed capacitance as well as the impedance change with frequency. Modified filament resistors are available in high-resistance values and in larger sizes, with power ratings up to 90 watts. The characteristics of these resistors make them useful in the frequency range up to about 200 mc.

(2) Resistors having very low reactance often are required for use at frequencies up to 1,000 mc and higher. For values up to 600 ohms, resistors are made which consist of a sheet of low-loss phenolic plastic coated with a thin film of resistive material. The specific resistance is stated in ohms per square, because a square piece of this material, no matter what its size, has the same resistance from the whole length of one edge to the whole length of the opposite edge. Contact to the resistor is made through metallic paint applied to its surface in a line along opposite edges. Disks of this material frequently are used as low-reactance shunt resistors built into devices for terminating coaxial transmission lines carrying vhf or uhf energy. The disk is cut to size from a sheet of the material which has the appropriate resistance to match the characteristic impedance of the line; thus reflections are minimized.

(3) Resistors made by depositing a thin layer of pure, finely divided carbon or a car-

bon-boron mixture on the surface of a ceramic or glass tube have been developed fairly recently. In general, they provide improved performance characteristics at all frequencies, particularly as to stability, and show less change in impedance with increasing frequency.

27. Miscellaneous Components and Materials

a. Dielectric Losses. Because of increasing power losses, moisture absorption, surface leakage, and similar effects, common insulating materials such as rubber, cotton, porcelain, and bakelite are impractical for use in high-impedance circuits in the 30- to 1,000-mc range. Instead, materials with much lower loss factors must be used if reasonable circuit efficiency is to be obtained. Steatite, polystyrene, Teflon, polyethylene, and various silicon compounds are among the dielectric materials used for insulation at frequencies above 30 mc. Efforts also are made to keep the physical bulk of insulation in the actual electric field small, and to keep the material out of the more intense part of the field when possible.

b. Surface Leakage and R-F Resistance. Wide use is made of lacquers containing silicon compounds, which reduce surface leakage under high-humidity conditions by breaking up moisture films into individual drops. Tubes and other components are placed close together and shorter conductors are used for circuit wiring to reduce stray capacitances and inductances. Often the conductors, as well as the soldering lugs and contacts on tube sockets, plugs, switches, and everything in the r-f path, are silver-plated to reduce their r-f resistance and skin-effect losses. The physical arrangement of metal in switches, plugs, jacks, and small parts is such that their parallel-lying sections offer high distributed capacitance. Despite ceramic insulation, silver-plating, and improvements in design, such components seldom are practicable for use in the r-f path at frequencies above 300 mc, since they are likely to cause high losses, shunting, or undesired resonant circuits. Figure 59 illustrates a switch that operates at about the highest frequencies at which mechanical switching of high impedance circuits is practical.

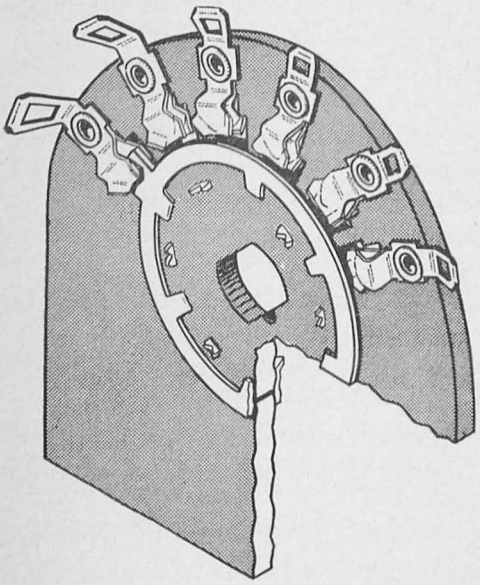

TM 667 – 413

Figure 59. Typical switch for vhf.

28. Summary

a. Lumped-property components are electronic parts in which definite amounts of one specific property are concentrated.

b. Lumped-property components are physically small and convenient to use in proportion to the amount of the property they provide, but their electrical losses increase with frequency until a frequency is reached at which they are useless for practical circuit purposes.

c. The losses appear as heat caused by a combination of dielectric loss, r-f resistance loss, and radiation loss.

d. Lumped-property components are used widely as circuit elements at the frequencies below about 500 mc, but there is no definite frequency at which their use becomes impractical because of losses.

e. Lumped components are adopted where small size and portability of equipment are paramount, whereas distributed components are chosen where maximum stability and efficiency are needed.

f. All practical capacitors possess small amounts of series inductance and r-f resistance, causing an effect of series resonance at some frequencies where the reactances become equal and opposite.

g. All types of fixed capacitors suffer increasing losses as the working frequency is raised.

h. Common paper capacitors usually become series-resonant at some frequency between 1 and 10 mc and the losses are relatively high. Average mica types become series-resonant at frequencies between 10 and 100 mc, and ceramic capacitors become selfresonant at frequencies ranging from about 30 to 500 mc.

i. Common variable capacitors are subject to higher losses as the operating frequency is increased, because of increasing dielectric losses and r-f resistance in the leads and plates.

j. Improved designs, such as the butterfly, tubular, and disk capacitors, and low-loss dielectric materials, result in higher Q at frequencies above 30 mc.

k. The butterfly capacitor, with added built-in parallel inductance is used as a tuned-tank circuit of high efficiency.

l. The distributed capacitance between turns of practical inductors is of negligible importance at the lower frequencies but, as the operating frequency is increased, a point is reached where the coil becomes parallel-resonant with its own capacitance.

m. The losses resulting from r-f resistance (skin and proximity effects) and dielectric loss, as well as hysteresis losses in iron-dust cores, increase with frequency.

n. The Q of practical inductors has a maximum value at some particular frequency, above and below which it declines gradually; inductors usually are designed to have the frequency of maximum Q fall within the operating range.

o. The design of inductors for use at frequencies above about 30 mc is complicated by factors such as power-handling capacity, form factor, loss reduction, and the necessity for making the inductances considerably smaller while maintaining the desired L-C ratios.

p. The only practical type of winding for the 30- to 500-mc range is the single-layer solenoid which, by careful design, may be made to have reasonable Q at these frequencies.

q. To reduce the change in inductance caused by thermal expansion of coils, special inductors are constructed of alloys with low coefficients of expansion, such as Invar. Since these alloys usually are poor conductors, they are plated with copper or silver to a depth sufficient to carry most of the current.

r. At frequencies above a few megacycles, the effective impedance of ordinary types of carbon composition resistors decreases as the frequency is increased, because of the effects of distributed capacitance and of capacitance between leads.

s. Wire-wound resistors cannot be used at high frequencies because of unavoidable inductance and capacitance, which introduces unwanted reactive and resonant effects.

t. The manner in which a resistor is mounted has a considerable effect on its performance, because of the added capacitance of the leads and body to the ground.

u. Resistors constructed of low-reactance films of resistive material coated on sheets of low-loss phenolic plastic may be used at frequencies as high as 1,000 mc. This type of resistor often is cut to disk shape and used to terminate a transmission line in its characteristic impedance, for the purpose of minimizing reflections.

v. Dielectric materials commonly used at lower frequencies, such as rubber, cotton, and Bakelite, have such high losses in this frequency range that lower-loss materials, such as polystyrene, Teflon, polyethylene, and Steatite must be used.

w. Surface leakage is held to a minimum by use of moisture-repellent lacquers.

x. Unwanted lead inductance and r-f resistance are minimzed by using short, heavy connections, and silver-plated conductors where necessary.

y. Switches, sockets, and connectors are mounted physically in ways that minimize stray capacitance.

z. Switching of high-impedance circuits carrying r-f signal energy becomes inefficient and often impractical above about 300 mc.

29. Review Questions

a. What are the advantages of lumped components in a high-frequency circuit? The disadvantages?

b. What is the upper-frequency limit at which it becomes necessary to change over from lumped to distributed components?

c. What determines the series resonance of a capacitor?

d. Why are mica and ceramic capacitors used at the higher frequencies?

e. Describe a butterfly capacitor.

f. How are self-resonant inductors used in high-frequency circuits?

g. What factor determines the design of inductances for use on the higher frequencies?

h. What effect do powdered-iron cores have on inductors used on the high frequencies?

i. Draw a diagram showing the equivalent circuit of a composition resistor at very high frequencies.

j. Why must materials with low dielectric loss be used at the higher frequencies?

k. How can lead inductance and r-f resistance be minimized?

CHAPTER 5

VACUUM TUBES—30- TO 1,000-MC RANGE

Section I. FACTORS AFFECTING TUBE PERFORMANCE

30. Introduction

a. Although the basic principles of vacuum-tube operation are unchanged, certain factors which can be disregarded in tube operation below 30 mc become important at higher frequencies. The inductances of the electrode leads and the capacitances between electrodes are very small, but at higher frequencies their reactances become significant. In addition, electrons do not travel instantaneously from the cathode to the plate, but require a finite transit time. This causes an in-phase grid current to flow, even though the grid is negative, and results in a loading effect across the input that reduces over-all gain in all classes of tube operation.

b. Skin effect in the electrodes and electrode leads causes the r-f resistance to increase with frequency; dielectric losses in the insulating electrode supports are increased, and some power is lost by direct radiation from the electrodes and their leads. The effect of these factors is to cause tube efficiency to become progressively lower as the operating frequency is increased. For example, a tube operated as an amplifier at 50 mc will give less output for a given signal input than it will at 5 mc, even if the external circuits are equally efficient at both frequencies. Also, since these losses increase with frequency, there is a practical upper frequency limit, beyond which the tube is not useful as an amplifier. If the same tube is operated as an oscillator, the high-frequency limit of operation will be about two-thirds to three-quarters that of the limit as an amplifier, because the tube can no longer supply sufficient output to make up the increased losses and still provide a useful output signal.

c. These effects always are present in a vacuum tube, no matter what the operating frequency but, as the frequency is raised, the effects increase and become so large that they place an effective upper limit on useful operation. Although it is not necessary to learn new operating principles, it is important to understand how and why these characteristics which were previously disregarded become major limitations at frequencies above 30 mc. As the wavelength is made shorter, it becomes comparable in length to the physical length and spacing of tube electrodes and leads. The apparent solution to this difficulty is to scale down the entire tube structure. There is a practical limit to this, however, governed by the power-handling capacity which is required. New tube designs have been developed which successfully overcome one or more of the limitations without requiring such a drastic size reduction that mass-production methods of manufacture become impractical.

31. Interelectrode Capacitance and Lead Inductance

a. General.

(1) Since any two points between which a difference of potential can exist are said to have capacitance, a small but significant value of capacitance must exist between any element of a vacuum tube and each of the other elements. Additional capacitances exist between the leads, particularly in those tubes in which the leads are brought out through a common stem to the base. When the tube is operating with normal applied voltages, the effective capacitances between electrodes are different from the capacitances when the cathode is not emitting. These differences are caused partly by expansion of the parts when the tube heats and partly by the electron stream. When the tube is cold, the dielectric between electrodes is mostly vacuum,

but in operation this vacuum is partially filled with a stream of electrons which results in a change in the dielectric constant. Naturally, this changes with variations in the electron stream. The capacitance values are measurable, and are listed in most tube characteristic tables. The figures given are generally cold capacitances. The *input capacitance* is measured between the input electrode (usually the control grid) and all the other electrodes connected (except the output electrode, which is grounded). The *output capacitance* is measured similarly; the input electrode is grounded, and capacitance is measured between the output electrode (usually the plate) and all the other electrodes connected (except the input electrode). The actual capacitance values vary considerably for different types and sizes of tubes.

(2) Since any conductor possesses self-inductance, the internal leads to the tube elements and the elements themselves, as well as the tube pins, will have some inductance. For example, within a tube operating above 30 mc, circuit calculations must take into consideration the effective values of inductance. This inductance is in series with the plate, grid, and cathode, and although the actual inductance of a lead is usually no more than one or two hundredths of a microhenry for receiving tubes, the reactance offered at frequencies of several hundred megacycles becomes appreciable.

b. Effects.

(1) *General.* At frequencies below 30 mc, it is practicable to consider the Colpitts oscillator circuit (A of fig. 60) as a vacuum tube plus an external circuit, and to consider the effects of these separately. The interelectrode capacitances and the lead inductances are so small in comparison with the values of the lumped components in the exterior circuit that they may be ignored, and any slight effect they have is tuned out easily by the variable capacitor. To raise the operating frequency without changing the tube, it is necessary to decrease the inductance and capacitance of the frequency-determining resonant circuit. As the frequency increases, the lumped components will have smaller values, and the interelectrode capacitances and lead inductances become important. For example, the grid-cathode capacitance is in shunt with the lumped-property grid-circuit capacitor, limiting the minimum value of capacitance in the tuned circuit. If a resonant line section is used as the external circuit element, as in B of figure 60, it is no longer possible to regard the arrangement as a vacuum tube and an external circuit. The grid-plate capacitance of the tube is shunted across the resonant line section and the grid and plate lead inductances are in series with it. This has the same effect as if part of the external circuit had been pushed within the tube. Therefore, the arrangement must be considered as a single circuit with one part operated in a vacuum. Actually, the circuit-plus-tube must be considered as a single circuit as soon as the frequency is high enough to make it necessary to compensate for tube effects in the design of the resonant circuit. If the operating frequency is increased still further, the length of the resonant line section becomes shorter. Eventually, a frequency is reached at which the interelectrode capacitances resonate with the inductances of the leads when a short, straight piece of wire is connected across the grid and plate pins. This condition is shown in C of figure 60; the circuit is still essentially a Colpitts oscillator. The frequency at which this occurs is called the *apparent maximum operating frequency.*

(2) *Cathode lead inductance degeneration.* The inductance of the cathode lead usually is considered the most important of the lead inductances, because the varying components of both the grid and plate circuits flow through this lead. The amplified plate current I_p (fig. 61), which is approximately 180° out of phase with the grid voltage, flows through the cathode lead inductance and causes a voltage drop, E_{kL}. When the input voltage, E_g, is applied across the grid

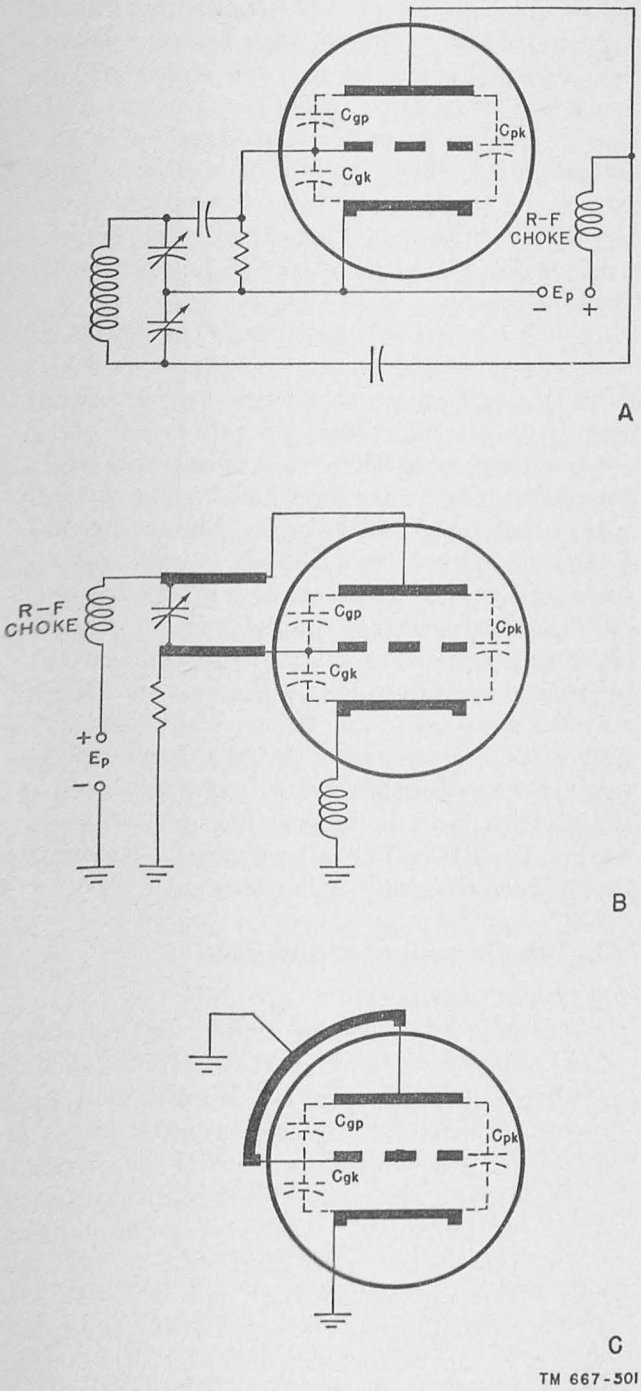

Figure 60. Effects of tube reactances as frequency is increased.

and cathode leads, it is opposed by this drop in the cathode lead inductance. Therefore, the input voltage which actually appears across the grid and cathode is less than the applied signal voltage. Since the reactance of a 1-inch cathode lead, .025 inch in diameter, is 62.8 ohms at 500 mc, the loss occurring in this manner becomes serious. In general, the effect of the inductive reactances of all the leads is to create r-f voltage drops in series with the electrodes. More important, however, is their effect in conjunction with the interelectrode capacitances. The two reactances produced within the tube both simple and complex impedance paths, which tend to reduce the impedances offered at the tube terminals.

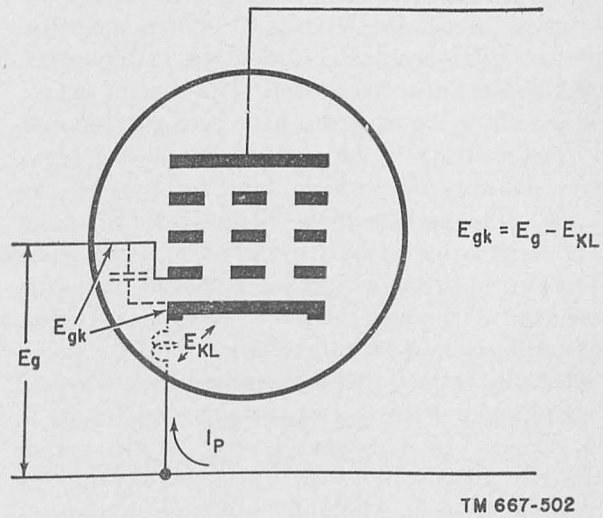

Figure 61. Effect of cathode lead inductance on signal voltage.

32. Transit Time

a. Signal Losses. *Transit time* is the length of time it takes an electron to travel from the cathode to the anode of a vacuum tube. When the frequency is increased, the time of 1 cycle is shortened progressively, and the transit time can become a definite portion of the cycle. During this part of the cycle, the applied signal on the grid may go from positive to negative, or from an increasing to a decreasing value. The flow of electrons past the control grid causes to be induced in that electrode a current which may flow *into or out of* the grid, depending on the relative grid voltage. The current flow absorbs power from the input signal, even though the grid is always negative, and has the same effect as if a shunt resistance and a shunt capacitance were connected across the grid and cathode of the tube. The loss of signal energy brought about in this man-

ner is the most important effect of transit time, and the loss increases as the frequency increases.

b. Plate Current Effects. The larger transit time at higher frequencies causes the plate current to lag the plate voltage and distorts the plate current curve. In tubes operated in class B or class C, the electrons emitted from the cathode at different times during the signal pulse have different transit times because of the effect of the varying grid potential on the electron stream. Also, the electrons that are still flowing when the plate goes negative are slowed down and finally some are turned back toward the cathode. The electrons approaching the negative plate induce a positive plate current. As shown in figure 62, this results in a tail on the plate-current curve. When all of the electrons have been stopped and turned away from the plate, they induce a negative plate current which flows for part of the cycle. The positive plate current generally flows for longer than a half cycle when transit time becomes appreciable. Since a longer plate-current pulse increases the plate losses, the net effect is a reduction of amplifier efficiency. In an oscillator, the voltage phase is fixed by the plate-grid coupling, and this lag of plate current results in a serious loss of output power. If the transit time is made still larger by increasing the frequency, the tube eventually will cease to oscillate.

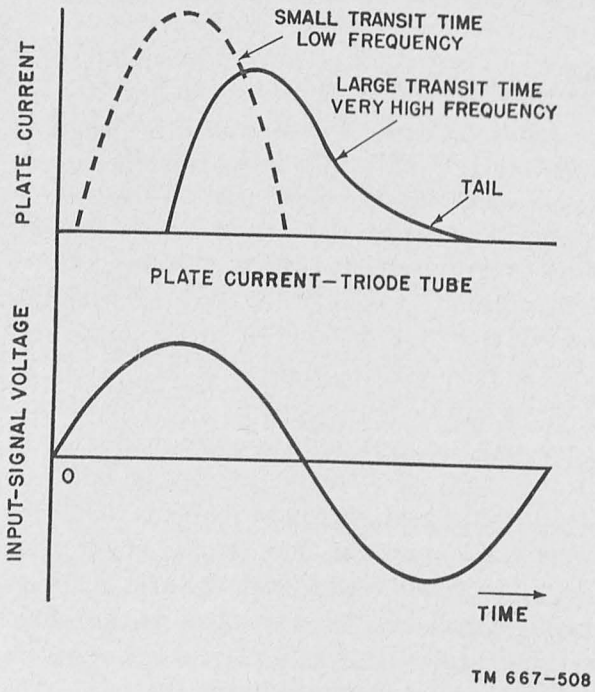

Figure 62. Charges induced on plate by electron in transit.

c. Screen-Grid Tubes. The transit-time effects of screen-grid tubes are somewhat less pronounced than those of triodes because the screen grid is maintained at a fairly high positive potential. This gives a more uniform acceleration to the electrons after they pass the control grid and reduces the tendency of that electrode to cause varying transit times. There is still some lengthening of the plate-current pulse, however, with resultant losses.

d. Back-Heating of Cathode. The effect of back-heating occurs when a number of electrons are caught in the grid-cathode space at the instant when plate current normally would be cut off in low-frequency operation. A considerable fraction of the electrons are forced back to the cathode by the negative field at the grid. The energy they expend on striking the cathode causes heating. As the transit time increases with higher frequencies, the back-heating supplies an appreciable amount of the power required to heat the cathode for normal operation, so that the filament current must be adjusted to conditions within the tube. This effect is important only in a few amplifier tubes operated between 500 and 1,000 mc, such as the 4X150A, and in magnetrons used in radar work. The life of the cathode may be shortened by excessive electron bombardment.

33. Tube Impedances and Gain

a. Input Impedance.

(1) When a vacuum tube is operated in the conventional way, the input signal is applied between the control grid and cathode. At frequencies up to 25 or 30 mc, the impedance seen by the external circuit which supplies the input signal is effectively the reactance of the capacitance between grid and cathode. Because this capacitance is in parallel with the capacitance of the external tuned circuit, it can be considered a part of it. The total capacitance in parallel with the inductance of the coil forms a parallel-resonant circuit, and the effective impedance the signal sees between grid and cathode is a large value of almost pure resistance. As the frequency is increased, however, this situation gradually changes. The reactance of the cathode-lead inductance common to both plate

and grid circuits becomes significant, and the transit time becomes a more considerable fraction of the time of 1 cycle of the signal voltage. The effect of these two factors is as if a resistance had been connected in parallel with the input tuned circuit, as shown in figure 63. The value of this effective input resistance *decreases with an increase in frequency* for any tube, and it is the most important component of the input impedance of the tube. The value at a given frequency depends on the tube characteristics, and is different for different tubes. The reciprocal of the input resistance, 1/R, is called the *input conductance*. If a resonant circuit is used at the grid-circuit impedance of an amplifier, the effective input resistance of the tube in shunt with it lowers the Q, reduces the selectivity, and also reduces the signal voltage applied to the grid of the tube. This is particularly important in receiving circuits.

(2) The phase shift between grid and plate circuits is affected by the tube reactances so that it is almost never the 180° which is expected at lower frequencies. In an amplifier this is not serious, since the circuit can be neutralized, but in an oscillator depending on plate-grid feedback to sutain oscillation the result may vary from loss of efficiency to complete stoppage of operation. The capacitive component of the tube input impedance becomes a part of the total shunt capacitance of the tuned-grid circuit. Thus, the effect on circuit performance is not serious, unless it is so large that an unfavorable L-C ratio is produced. However, the changes in value of the input capacitance when the electron stream changes with signal or bias may change the resonant frequency of the grid circuit by a significant amount. In i-f amplifiers operating at 40 mc or above, the inductor is often a coil which resonates with its own very small distributed capacitance. Since the distributed capacitance is in parallel with the tube input capacitance, a variation of 2 or 3 micromicrofarads

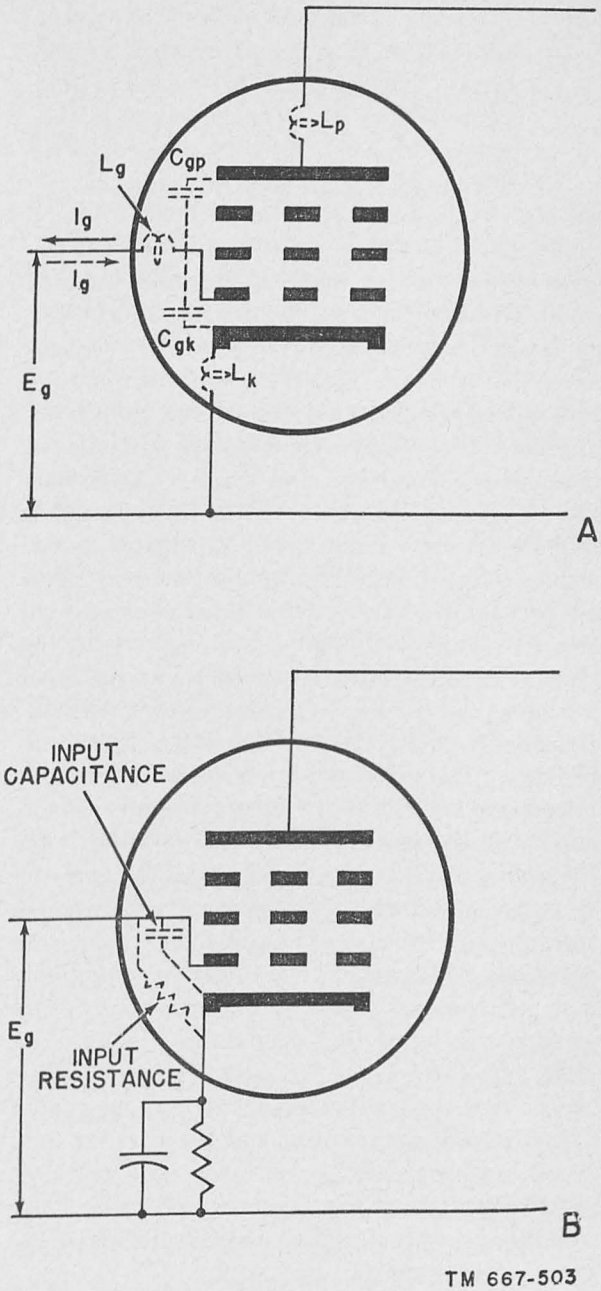

Figure 63. Effective input impedance.

in the tube input capacitance will have a considerable effect on the resonant frequency of the grid circuit. This effect can be neutralized by placing an unbypassed resistor between cathode and ground. In triodes, the grid-plate capacitance also is a strong factor in determining the input impedance because of the positive feedback introduced when the stage is not neutralized. In pentodes, this feedback

221643°—52——5

is small, and the cathode lead inductance and transit time are of greatest importance. The input resistance of a typical pentode may be 20 megohms at a frequency of 1 mc, but only 2,000 ohms at 100 mc.

b. Output Impedance. The r-f component of current flowing in the plate-circuit bypass capacitors *and the plate-cathode capacitance of the tube* would be exactly out of phase with the voltage, and would not cause a power loss if these capacitances had no resistance. Skin effect in the tube leads and the dielectric losses at the glass seals, however, cause this current to be partially *in* phase with the voltage, and cause a power loss. The effect is as if a resistance had been connected across the plate and cathode terminals of the tube, in parallel with the output capacitance existing between the plate and all other elements and ground. This combination in parallel with the plate resistance forms the output impedance of the tube, and shows the same decrease with increasing frequency that occurs in the input impedance. The resistive component of this output impedance is in shunt with the plate-tank circuit, and naturally causes some loss of Q and selectivity. Gain and power output are reduced, because the resistive impedance of the tank circuit decreases in comparison with the value of the internal plate resistance of the tube. The equivalent shunt output resistance at various operating frequencies is shown in figure 64 for 6*C*6 which is an older tube type, and for a 954 acorn pentode. This shows that the acorn type, because of its smaller interelectrode capacitances and lower lead inductance, has higher shunt resistance and, therefore, performs better at any frequency plotted. These relationships between the two tubes hold true also for the input resistances.

c. Tube-Reactance Limitations on Gain. The maximum attainable voltage gain for each stage in a given circuit depends on several tube factors. These include the transconductance, the input grid resistance, the grid and plate capacitances to ground, and the effective plate resistance. The transconductance, g_m, which is equal to the amplification factor divided by the plate resistance, is a good measure of the tube merit, and a high value is desirable. More important for most purposes, however, is the *figure of merit.* This is a term in general use, but considerable confusion exists because it has been applied to at least three different

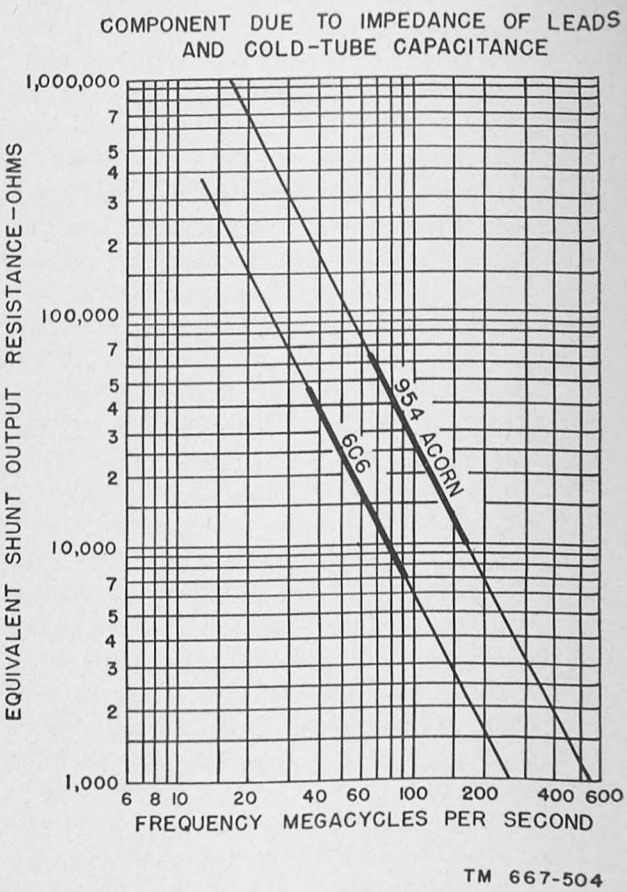

Figure 64. Equivalent shunt output resistances versus frequency for conventional and acorn pentodes.

ratios. Therefore, for the purpose of this manual, the *figure of merit* is defined as the transconductance divided by the total of the interelectrode capacitances.

$$\text{Figure of merit} = \frac{g_m}{C_{\text{interelectrode}}}$$

The gain of a stage for a given bandwidth is approximately proportional to the figure of merit of the tube. By the formula, a higher figure of merit is obtained if the interelectrode capacitance can be reduced; consequently, the gain is directly affected. Furthermore, for reasonable gain, it is necessary to have a fairly high impedance in the circuit connected to the grid. As the operating frequency is increased the input resistance decreases, and the effective grid circuit impedance is reduced below the required value. To maintain the same wide-band response and the same voltage amplification at a higher frequency, the ratio of transconductance to input resistance must be reduced. The input resistance of the tube must be made larger.

34. Reducing Tube Reactances

Since the tube resistance cannot be increased by circuit changes, because the ratio of transconductance to input resistance is fixed, the design of the tube must be changed. At given spacings of electrodes, the limitation in highest operating frequency is influenced by operating voltages, and it generally is not practical to raise the voltages above a reasonable limit, because the ratings of the tube may be exceeded. The other alternative, size reduction, has been effective, within limits. For example, dividing all the linear dimensions of a tube structure by a constant of four will result in the lead inductances, the interelectrode capacitances, and the transit time of the electrons between electrodes being divided by four. The tube transconductance, amplification factor, plate resistance, and electrode currents, however, will remain practically the same, even though the new tube is only one-quarter the size of the original. The allowable plate dissipation and the available cathode emission will be divided by 4^2, or 16, and the current densities will be multiplied by 16, which is important in power amplifier or transmitting tubes. In practice, not all of the dimensions of a tube are reduced by the same amount because of various factors, including economical commercial production. The electrode leads are shortened, but usually they are made larger in diameter in order to reduce the self-inductance. Some types have double leads, which are connected in parallel to reduce the inductance. Part of the interelectrode capacitance in larger tubes results from the practice of bringing the leads out parallel to each other through the glass stem at the base of the tube. Arrangements that separate the leads, such as the acorn and other types, achieve a considerable reduction in interelectrode capacitance and nearly all that remains is between the electrodes themselves. Further scaling down is the only means of decreasing this. The grid-cathode spacing is particularly important in obtaining good characteristics at higher frequencies. In the WE 404A and WE 417A types this spacing is so close that it is necessary to machine down the cathodes after they are coated, to eliminate bumps which could cause a nonuniform electric field. In another tube structure the problem of lead inductance and interelectrode capacitance is solved by incorporating the electrode leads, which are low-inductance disks, into coaxial-line sections, which may be external, or built into the tube. This is the disk seal or lighthouse type, which is particularly efficient at frequencies in and above the 30- to 1,000-mc range.

35. Reducing Transit-time Effects

Transit-time effects can be minimized by scaling down physical dimensions and increasing operating voltages. Miniaturization is utilized widely and amplifiers designed for use above 30 mc usually have close interelectrode spacing. Many transmitting types are very small in proportion to their power ratings and are cooled by water or forced-air draft. Where close spacing is utilized, the cathode-grid distance is particularly important. Preventing the electrons from leaking from cathode to plate around the ends of the control-grid supports is important, since such leakage would result in very large transit times and lengthen the tail of the plate-current pulse. Finally, pentode or screen-grid tubes with their naturally shorter transit times may be used in place of triodes.

36. Dielectric Losses

Wherever dielectrics are subjected to the influence of strong, varying electric fields, molecular movements result in heating, which constitutes a form of loss known as dielectric hysteresis loss. Since insulators are required to support the electrodes and since it is economical to use glass for tube envelopes, a certain amount of loss must be expected from this source. Hysteresis losses in dielectrics are ordinarily proportional to the operating frequency and they may become appreciable if a tube is operated at a sufficiently high frequency. Part of this problem is solved when tubes are scaled down physically for improved performance because the support sizes are reduced also, which means that less dielectric is left in the electric field. Proper positioning of the electrodes, to place the insulators at points of low electric field, also helps, as does the use of lower-loss materials. Losses in the outer glass envelope are usually relatively small, except at the seals where the electrode leads are brought out. Here the heating effect is particularly strong where the electric fields are concentrated in a small area of glass. Since each cycle causes a certain amount of heat, doubling the frequency doubles the heat. In addition to this, more heat is conducted along

the leads from the electrodes, which may be operating at very high temperatures, and a thermal problem is created. Not only must the glass used at the seals be low-loss, but it must be capable of withstanding large amounts of heat without softening or undergoing chemical breakdown. Glass made of lithia borosilicate has excellent loss characteristics and is used widely. A soda-alum-borosilicate glass with added uranium often is used between tungsten leads and pyrex envelopes to provide good heat properties, low losses, and expansion matching. A type of glass known as nonex frequently is used in power tubes and for sealing to tungsten leads. Another factor which helps to reduce dielectric hysteresis losses at the seals is the use of large-diameter leads. If the center of the lead is considered as the point source of the electric field, the glass surrounding a large-diameter lead is farther away and subjected to a lower intensity than the glass surrounding a lead of smaller diameter.

37. Skin Effect

When vacuum tubes are operated at frequencies above 30 mc, all r-f currents, because of skin effect, flow in thin layers on the surfaces of the electrodes and leads. Since the r-f resistance of a conductor of given diameter, such as a plate lead, increases as the frequency is increased the only practical means of reducing losses from skin effect is to increase the diameter of the leads. This does not reduce the skin effect because the depth to which the current penetrates depends only on the frequency and the conductor material, but it does increase the cross-sectional area of the part in which the current travels, reducing the effective resistance. Therefore, when a tube is designed to operate at higher frequencies, heavier leads are used to provide approximately the same effective resistance as that obtained with smaller leads at lower frequencies. In addition, the use of heavier leads offers somewhat lower lead inductance and reduces the electric-field strain at the glass seals.

38. Direct Radiation

The power radiated from a conductor depends on the relationship between the physical size of the conductor and the wavelength and increases as the conductor size approaches one wavelength. For this reason, the power radiated from the leads and the electrodes themselves increases as the operating frequency is increased. Some reduction of radiation losses is achieved by shortening the electrodes and leads in the scaling-down process. Tube shielding often is used; this does not prevent losses but prevents the radiation from interfering with other parts of the circuit. The radiation losses are converted to heat losses caused by induced currents in the shield. The most efficient arrangement is one in which the shielding is done by a circuit element where current normally flows. Then the induced currents can be made to do useful work, and no longer contribute to the losses. One practical means of doing this is to use a coaxial-line section as the tank circuit, as is frequently done with lighthouse tubes. Here, the outer conductor of the line section acts as the tube shield and currents induced in it add to the normal tank current. In this manner, losses are reduced substantially and the over-all efficiency of the tube and circuit is increased.

39. Miscellaneous Effects

a. Grid Gas Current. Even in a well-manufactured vacuum tube there are always some molecules of gas because it is impossible at present to produce a perfect vacuum. When electrons collide with these molecules, positive ions are created and these are attracted to the negative control grid. This causes a grid current to flow when the grid is negative. The grid current thus produced is small, but it has the effect of making the grid less negative, which is undesirable in view of the effects of input resistance in this frequency range. To clean up as much of the residual gas as possible during manufacture, materials known as *getters* are used. The getters, usually alkali metals, are flashed by means of heating to combine chemically with the gasses, after which the vaporized metal deposits itself as a thin metallic film. In tubes meant for rigorous service, it is important that this film does not settle where it might form leakage paths and cause increased losses. Therefore, the getter flash is controlled, usually by being inclosed in a small cup or tube so placed that the vaporized metal will not be deposited on any of the insulators. With miniature and subminiature tubes, the elements are so small that the flash must be directed carefully.

b. Grid Emission. Any metal will emit electrons if heated sufficiently, although some are

much more efficient in this respect than others. In scaled-down tubes suitable for use at frequencies higher than 30 mc, the grid is subjected to heating by the nearness of the cathode as well as by the in-phase grid currents. Some electrons will strike the grid even though it is negative, causing the possibility of secondary emission. As a result, there is likely to be both primary and secondary emission from the grid, which adds to the space charge and is undesirable because it varies erratically. This effect can be reduced in practice by plating the grid with a metal that does not emit electrons easily. Gold is particularly effective and is used where the type of operation is severe enough to warrant the expense of applying it. Another method, somewhat less effective, is spraying the grid with finely powdered boron carbide.

c. Heat Radiation. The radiation of heat from the plate of an air-cooled tube becomes a factor of importance because the tube efficiency is reduced as the frequency is raised. For a given power input, a reduction of efficiency causes higher plate dissipation. This means that the input power must be reduced to keep the plate dissipation from going above the rated value and causing serious overheating. When the input power is decreased, however, the useful output power drops. If a way can be found to make the plate a better radiator of heat, the plate dissipation can be higher under the same operating conditions; the input power can be kept the same or even raised somewhat to maintain the useful power output as the efficiency of the tube decreases. The most common method of improving the thermal radiation of a plate is to apply a coating of finely divided carbon. The resultant dull-black surface is about 60 percent more efficient as a heat radiator than polished nickel. Carbonized anodes are used widely in tube manufacture.

Section II. VHF AND UHF VACUUM TUBES

40. Introduction

The tubes discussed in this section are by no means the only ones usable at these frequencies, but are representative of the various groups into which most of the others will fall. Each tube selected is an example of a particular construction or a method used to overcome or minimize one or more of the limitations already explained. The frequency range covered can be split roughly into two parts, one extending from 30 to approximately 500 mc, the other from perhaps 100 mc to 1,000 mc. In the lower range, the vacuum tubes are usually of conventional construction, with the electrode leads brought out to base pins or terminals on the side or top of the bulb; whereas in the higher range, a number of unusual mechanical configurations are used. Consequently, the tubes are easily mountable in coaxial-line tuned circuits, and their efficiency, stability, power-handling capacity, low lead inductance, interelectrode capacitance, and high transconductance have been improved.

41. Tubes Useful Below 500 Mc

The tubes discussed in this section are efficient in the region below 500 mc, and several types are capable of operating with reasonable efficiency at considerably higher frequencies. However, the types better adapted to coaxial-line circuitry are more efficient in the upper-frequency range, and are preferred where more effective performance is required. In all types, the principles of operation remain the same, although the physical configuration of the various tubes may differ considerably (fig. 65).

a. Miniature Triodes. In many receiver circuits and low-power transmitter stages, miniature triodes and twin triodes, as well as some triode-connected pentodes are used. Of the single triodes, the 6C4 is most representative of a general-purpose miniature triode, and the 6J4 illustrates a design meant for a more specialized use. The 12AU7 is a commercial general-purpose double triode, comparable in its applications to the 6C4 in single triode circuits. The 5670 is a tube on the Armed Services Preferred List and can be used for most general-purpose double triode circuits. It is a semispecial-purpose tube, as are several others in the 5000 series.

(1) *6C4.* The 6C4 is a seven-pin miniature single triode, usable up to 150 mc with reasonable efficiency. It is similar in internal structure and performance to the older 6J5 octal-base tube, and is suitable for class C service. It can provide out-

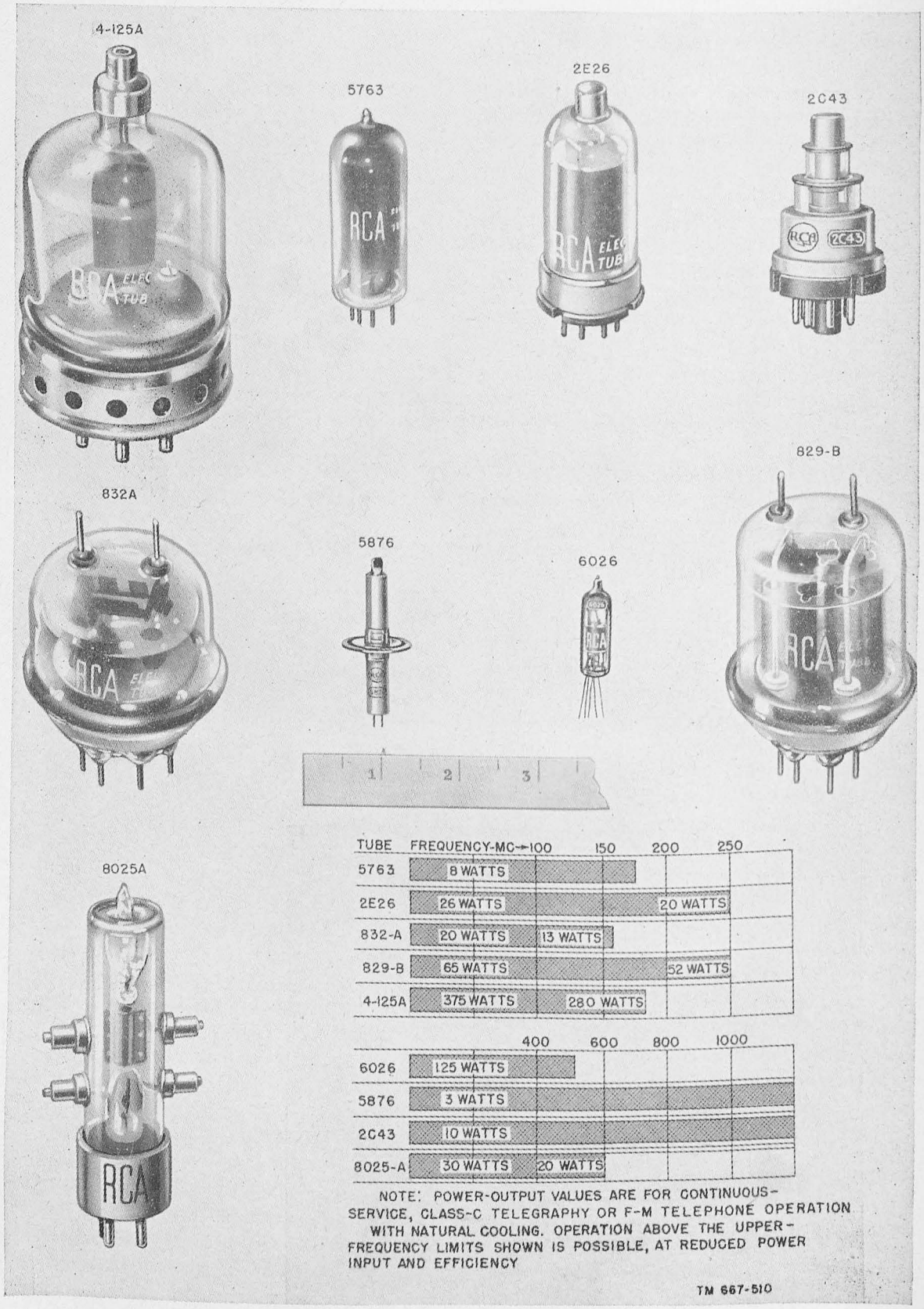

Figure 65. Representative vhf and uhf vacuum tubes.

puts up to 5 watts at 60 mc, and about 2 watts at 150 mc. Its figure of merit is 500.

(2) *6J4.* The 6J4 is a miniature tube especially designed for grounded-grid operation in high-frequency r-f amplifier circuits. Operating efficiently up to approximately 500 megacycles, the tube has an extremely high transconductance of 12,000 micromhos. Its grid-cathode capacitance is 5.5 $\mu\mu$f but, in grounded-grid operation, this value can be tolerated. Its plate-cathode capacitance is .24 $\mu\mu$f, and the plate-grid capacitance is 4 $\mu\mu$f. The control grid of the 6J4 is gold-plated, to limit grid emission under adverse operating conditions. It has a figure of merit of 1,230. An internal shield, which aids in controlling feedback in grid-isolation amplifier service, is connected to the grid. Because of the very high transconductance, it has a high figure of merit and excellent performance characteristics as an r-f voltage amplifier in circuits where a good noise figure is required at frequencies up to 500 mc.

(3) *9002.* This tube is one of the first of the seven-pin miniature tubes developed, but it is still a useful general-purpose miniature single triode. Its internal structure is practically identical with that of the older 955 acorn miniature, but the interelectrode capacitances are slightly higher, because of the closer spacing of the leads in the base. Its figure of merit is 600, and it is still used in some military radio equipment.

(4) *6N4.* This is a later type of seven-pin miniature triode, in which both grid and cathode are provided with two connecting leads, each being brought to a separate base pin. Connecting such dual leads in parallel reduces the series inductance within the tube, permitting a somewhat higher upper frequency limit of operation. The dual leads also make possible a greater variety of circuit arrangements and, in some circuits, a reduction in plate-to-grid capacity coupling through the base. The 6N4 has a transconductance of 6,000 micromhos which, together with its low capacitances, gives it a figure of merit of 1,000. It is used in applications similar to those of the 6J4, but does not have the specially treated grid of that tube, and the interelectrode capacities are smaller.

(5) *955.* This triode is one of the first examples of a tube design in which the electrode structure was scaled down physically to reduce the interelectrode capacitances and transit time. It is of the acorn type, and the leads are brought out radially from the electrode assembly, instead of through a circle of pins in the base. This reduces the capacity between leads and aids in isolating the input from the output; however, it adds to the mechanical difficulties in manufacture and in design of sockets and other components. Since the socket is little more than a ceramic or plastic ring to hold the pin contacts in a fixed position, the losses that would occur in the more conventional tube socket are practically eliminated. It is usable as an oscillator up to 600 mc, when it can deliver 500 milliwatts output, and be mounted readily on a butterfly tuning circuit. It also is usable as an amplifier at slightly over 600 mc. Although the transconductance is only 2,200 micromhos, which is considerably less than that of several other tubes discussed here, its figure of merit is 730 because of its very low capacitances.

(6) *6F4.* This is also an acorn type triode, of a later design, in which two leads are brought out from both grid and plate electrodes, to permit connecting them in parallel for reduced inductance. The extra plate lead also aids in conducting heat away from that element, and slightly improves the plate dissipation capability. Its transconductance is 5,800 micromhos, well over twice that of the 955, and although the capacities are somewhat greater, its figure of merit is 1,290. It occasionally is used in low-power transmitter applications to deliver an output of about 1.8 watts in class C, with a power gain of nine.

(7) *6L4.* This tube is similar to the 6F4, with the same lead and basing arrangement, but the capacitances are smaller by

10 to 20 percent. As a result of this and its slightly higher transconductance, its figure of merit is 1,600.

b. Miniature Twin Triodes. Within the last few years, an increasing number of tubes have been developed in which two complete triode electrode structures are inclosed in the same envelope. This design has many variations, and permits great circuit flexibility, particularly when the two sets of electrodes are electrically well isolated from each other. In certain more recent types, such as the 6BQ7 and 6BK7, special shielding and other measures have been taken to achieve excellent isolation. These tube types are representative of a number of others of similar characteristics that have been omitted for lack of space. Data on such tubes can be found in tube handbooks and manufacturer's literature.

(1) *6J6.* The 6J6 was developed early in World War II when the need arose for a miniature twin triode that would operate well in the uhf range, and would have a high transconductance together with moderate power-handling capabilities. It is capable of delivering 3.5 watts as an oscillator up to 600 mc. Its transconductance is 5,300 micromhos; its interelectrode capacitances are C_{gk}, 2.2 $\mu\mu$f; C_{pk}, .4 $\mu\mu$f; C_{pg}, 1.6 $\mu\mu$f; the tube has a figure of merit of 1,260, and a maximum plate dissipation rating of 1.5 watts. Since it was the first and, for a long time, the only tube available in its class, it was used for many specialized as well as conventional applications, and often in military equipment. One of the disadvantages of this tube, however, is a common cathode serving both triode sections. This somewhat limits the variety of circuits in which it can be used.

(2) *5670.* The 5670 overcomes some of the limitations of the 6J6. It is a nine-pin miniature twin triode, having an envelope of somewhat larger diameter than the familiar seven-pin type. It retains the advantages of low lead inductance, low interelectrode and lead capacitance, and small electron transit time common to the miniature and subminiature group of tubes. The 5670 is a military preferred type which is becoming increasingly common in military equipment. It features separate indirectly heated cathodes for each triode unit, and has a transconductance of 5,500 micromhos. The interelectrode capacitances are: C_{gk}, 2.2 $\mu\mu$f; C_{pk}, 1.0 $\mu\mu$f; C_{pg}, 1.3 $\mu\mu$f. It will operate efficiently at frequencies well over 500 mc, and its figure of merit is 1,220.

(3) *2C51.* The 2C51 is a nine-pin minature twin triode, identical with the 5670 except for a difference in the heater current rating. Since it was developed originally as a special-application tube for service in which the balance of characteristics between the two triode units had to be accurate within 5 percent, it was rather expensive to manufacture, and is used commonly only in critical applications requiring accurate balance.

(4) *6BQ7.* This is a low-noise nine-pin miniature twin triode, designed particularly for use in direct-coupled, grounded-grid r-f amplifier circuits. The two triode sections, however, are entirely independent and the tube also is adaptable to other circuit arrangements. It is recommended for use up to 500 mc, and has been operated successfully as high as 900 mc. The leads to the tube pins are arranged to have the shortest possible length with the greatest possible spacing, thereby giving low lead inductance and capacitance. A built-in shield between the sections of the tube prevents excessive coupling between the output and input triodes when used in cascade. Extremely fine wire and small turn spacing are used for the grids, and the grid-cathode spacing is close. This allows the tube to develop high gain and still exhibit an excellent noise figure. The shield used in the 6BQ7 is provided with a specially shaped grid connector, effectively reducing the plate-cathode capacitance to a low value without increasing other critical capacitances. The fact that the shield is not welded to the grid permits either section of the tube to be used for grounded-grid or grounded-cathode operation, as desired. The tube has a figure of merit of 1,200. It has a relatively high input impedance and a sharp cut-off

characteristic, thus giving good optimum input loading when used in an amplifier circuit having a wide passband.

(5) *6BK7.* The 6BK7 is a nine-pin miniature twin triode, most of its major characteristics being similar to those of the 6BQ7. One outstanding difference is its transconductance, which is 8,500 micromhos; this results in a figure of merit of 1,400, the best of any of the conventional miniatures discussed.

c. Triode-Connected Pentode Types. Pentodes occasionally are used as triodes by connecting the screen and suppressor grids to the plate. This practice has the advantage of offering a higher transconductance than is available with many triodes. Also, since the screen acts as an anode, the spacing between the control grid and the screen grid is reduced, which helps to minimize the bad effects of transit time. Tubes suitable for use in this manner include the 6AG5, 6AK5, 6BC5, and the 6CB6. Each has a transconductance in the 5,000- to 6,000-micromhos region.

42. Miniature Pentodes

Miniature voltage amplifier pentodes have replaced almost entirely the older types of tubes in most applications in the 30- to 1,000-mc frequencies. Some older military equipment still uses tubes such as the 6SG7, 6SH7, and 6AC7, but newer designs usually make use of similar miniature types, because of the smaller size and weight and improved performance.

a. 6AU6. This is a seven-pin miniature pentode, with a transconductance of 5,200 micromhos, sharp cut-off characteristics, and moderate interelectrode capacitances. Its figure of merit is 500, which is moderate compared with several other tubes in this group. It has a small value of plate-to-grid (feedback) capacitance, and as a result provides somewhat better internal isolation between grid and plate circuits. It is useful as a general-purpose pentode up to about 100 mc, but has a higher noise figure than the 6AK5 and similar tubes. In weak-signal applications, other tubes are preferred in this frequency range. The 6CB6 is a newer and somewhat superior tube of similar characteristics, except that its plate-to-grid capacitance is larger.

b. 6AK5. This tube is a sharp cut-off seven-pin miniature developed during World War II for a large number of uses in radio and radar equipment where a tube with a high figure of merit was needed. It is useful as high as 400 mc as an amplifier, and because of its uniformity in production, gold-plated grid, to prevent grid emission, and dual cathode leads, it has an exceptionally good noise figure and gain-bandwidth product. It has been the prototype of such later tubes as the 6AG5 and 6BC5, which are slightly inferior to the 6AK5 in performance, but are easier to produce.

c. 5591. This is practically identical with the 6AK5, with a heater current rating about 15 percent lower. The 5654 is a later, somewhat more rugged version of the 6AK5. It is being used in new equipment, particularly in applications subject to vibration and mechanical shock. The 5702 is similar to the 6AK5, and is in a subminiature envelope which permits its use in extremely compact circuits. Its figure of merit is 635, as compared to 735 for the 6AK5.

d. 6BA6. This is a remote cut-off tube with performance characteristics similar to the older 6SG7, which it has practically superseded in new equipment. It is useful in applications similar to those for the 6AK5, but requires grid-bias control of gain. Its figure of merit is considerably lower, but still very good for a tube of this type.

e. 9003. This is an earlier miniature tube of the remote cut-off type, used in applications similar to those requiring the 6BA6. In its internal structure and performance the 9003 is practically identical with the acorn tube 956. Both are becoming obsolete because of the suitability of the 6BA6 for the same application. The figure of merit is 280.

f. 6AN5. Of the miniature pentodes, this is the only tube currently available that is capable of delivering as much power as the older 6AG7 and 7AD7, particularly into relatively low load impedances. It can deliver about 1.3 watts in class A service, and has a plate dissipation rating of 4.2 watts. As a class C r-f amplifier, it is capable of producing 3 or 4 watts output up to 150 mc, and is used frequently as a frequency multiplier in low-power transmitter stages.

43. Summary

a. The inductance of tube leads, and the capacitances between electrodes are very small, but at higher frequencies their reactance becomes significant.

b. A tube operated at the higher frequencies will give less output for a given signal input than it will at the lower frequencies.

c. As the wavelength is made shorter, it becomes comparable in length to the physical length and spacing of tube electrodes and leads.

d. When the tube is operating with normal applied voltages, the effective capacitance between electrodes is different from the capacitance when the cathode is not emitting.

e. The inductance of the cathode lead usually is considered the most important of the lead inductances because the varying components of both the grid and plate circuits flow through this load.

f. The effect of the inductive reactances of all the leads is to create r-f voltage drops in series with the electrodes of the tube.

g. Transit time is the length of time it takes an electron to travel from the cathode to the anode of a vacuum tube.

h. The larger transit time at high frequencies causes the plate current to lag the plate voltage and distorts the plate-current curve.

i. Because a screen-grid is maintained at a fairly high positive potential, the transit time effects of screen-grid tubes are less pronounced than those of triodes.

j. The phase shift between grid and plate circuits is affected by the tube reactances so that it is almost never the 180° expected at lower frequencies.

k. The acorn type, because of its smaller interelectrode capacitances and lower lead inductance, has higher shunt resistance and performs better at the higher frequencies.

l. The figure of merit is defined as the transconductance divided by the total interelectrode capacitances of the tube.

m. The gain of a stage for a given bandwidth is approximately proportionate to the figure of merit of the tube.

n. Dividing all the linear dimensions of a tube structure by a constant will result in the lead inductances, the interelectrode capacitances, and the transit time of the electrons between electrodes being reduced proportionately.

o. Wherever dielectrics are subjected to the influence of strong, varying electric fields, molecular movements result in heating, which constitutes a form of loss known as dielectric hysteresis loss.

p. These losses are proportionate to the operating frequency and may become appreciable if a tube is operated at a sufficiently high frequency.

q. When a tube is designed to operate at higher frequencies, heavier leads are used to provide approximately the same effective resistance as that obtained with smaller leads at lower frequencies.

r. Pentodes can be used as triodes, by connecting the screen and suppressor grids to the plate. This gives a higher transconductance than is available with many triodes.

44. Review Questions

a. How is the efficiency of vacuum tubes affected when frequency is increased?

b. What is input capacitance? Output capacitance?

c. What is transit time?

d. What effect does increased transit time have on the operation of the vacuum tube at higher frequencies?

e. Why do screen-grid tubes have less transit time effect than triodes?

f. What is the effect of back-heating?

g. What is the effect of lead inductance on the input impedance of a vacuum tube?

h. What is the input resistance of a typical pentode?

i. What determines the output impedance of a vacuum tube? The figure of merit?

j. How can tube impedances be reduced?

k. How can transit time be reduced?

l. What determines the dielectric hysteresis loss of a vacuum tube?

m. How are radiation losses reduced in the lighthouse tube?

n. What is a getter?

o. What are the effects of grid emission? Of heat radiation?

p. Name three tubes useful at frequencies below 500 mc; above 500 mc.

CHAPTER 6

AMPLIFIERS FOR 30- TO 1,000-MEGACYCLE BAND

Section I. INTRODUCTION

45. General

The operating princples of amplifiers used in this range involve no change from the basic concepts of amplified operation at lower frequencies. However, component and adjustment requirements for stable, reasonably efficient operation, particularly in the upper part of this range, are far more critical. The successful performance of such amplifiers is due largely to refinements in the design and arrangement of the components used, rather than to any change in their basic nature. Several factors must be considered when making a choice between lumped- or distributed-property components to form the circuit impedances in practical amplifiers. Distributed-property circuit elements can provide greater electrical efficiency at any frequency, but are heavier and bulkier than practical lumped-property components. Therefore, a compromise must be made in design between permissible size and weight and required circuit efficiency. The amplifiers used in this frequency range are either voltage or power amplifiers. Voltage amplifiers provide the greatest possible voltage gain over a given bandwidth, and power amplifiers deliver a large power output into a load, operating with a given-signal input power and producing a relatively small voltage gain. The earlier stages of a cascade amplifier are almost always voltage amplifiers, since voltage gain is desired to operate the grid of the following tube. Voltage amplifiers usually have relatively large values of plate-load impedance. Output stages whose load is to be fed to a transducer of some kind are designed as power amplifiers. These amplifiers normally have rather low plate-load impedances to allow for a large current flow and a correspondingly large power output. Borderline conditions exist in some specialized applications, in which both power output and a reasonable voltage gain are desired. In general, voltage amplifiers almost always are operated under class A conditions, but power amplifiers may be operated class A, AB, B, or C.

46. Bandwidth

a. General. Amplifiers often are referred to as narrow-band or wide-band. The term *wide-band amplifiers* usually implies a tuned amplifier with a pass band of at least 1 megacycle. In this frequency range, wide-band amplifiers are used as intermediate- and radio-frequency amplifiers in radar and television receivers, wherein requirements for bandwidths of approximately 4 to 10 mc and upward are common. *Bandwidth* means the band of frequencies passed by a tuned circuit or amplifier whose upper and lower frequencies are attenuated from the peak value by not more than 3 db (decibels) or one-half the peak power. These points are known as the *half-power points* and are shown on the response curve (fig. 66). To make possible a comparison of bandwidths having different center frequencies, the term *percentage bandwidth* is used. For example, an amplifier circuit tuned to 200 mc and having a pass band of 8 mc (200 mc±4 mc) is said to have a 4-percent bandwidth. An amplifier operating at 80 mc, having the same 8-mc bandwidth (± 4 mc), thus would have 10-percent bandwidth. For many purposes, the minimium bandwidth obtainable with practical circuit elements is desired. In other applications, a uniform response over a definite band of frequencies is required to pass the desired signal with negligible distortion.

b. Amplifier Bandwidth Requirements. The maximum usable bandwidth of amplifiers in this frequency range is important in many applications, and therefore, the amplifiers are designed to provide a definite pass band. At lower fre-

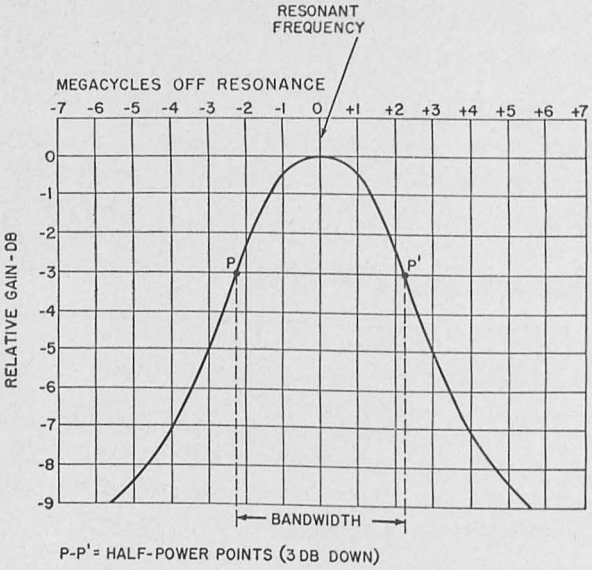

Figure 66. Typical amplifier response curve, showing half-power points.

quencies, the only requirement in this respect is often the minimum practicable bandwidth. The bandwidth required for faithful reproduction of a given signal will vary directly with the amount of information in the signal or the complexity of the signal. Also, the bandwidth of a given amplifier has a direct effect on the voltage gain obtainable from that amplifier. As the bandwidth of an amplifier is increased or decreased, the gain will vary in inverse proportion to the change in bandwidth, causing the mathematical product of gain and bandwidth to remain constant. For example, the gain-bandwidth product of an amplifier with a voltage gain of 40 and a 3-mc pass band would have a gain-bandwidth product of 120. If the pass band is increased to 6 mc, the voltage gain will drop to 20, so that the gain-bandwidth product remains unchanged. In communication equipment, the pass band often is just wide enough to pass the complete transmitted signal, with a small allowance for frequency drift and instability. When an amplifier is required to pass signals of a more complex nature, such as facsimile, or radar pulses, the bandwidth must be considerably greater than for voice or c-w (continuous-wave) so that the entire signal may be passed and amplified with negligible distortion. Some idea of the bandwidth required for a complex signal can be had by considering a radar pulse or a similar steep, flat-topped pulse. The bandwidth required in megacycles is roughly inversely proportional to the pulse width in microseconds; that is,

$$BW = 1/PW.$$

For example, a bandwidth of 1 mc would be required to pass a 1-microsecond pulse, and a bandwidth of 4 mc would be required to pass a .25-microsecond pulse.

c. Effect of Bandwidth on Circuit Noise. The electrical noise voltages associated with all parts of radio circuits, such as resistors, conducting leads, tubes, and capacitors, are caused by the natural motions of the electrons. Such noise increases with increasing temperature, and is distributed uniformily throughout the frequency spectrum. Because of this uniform frequency distribution of thermal noise, there is a direct relationship between the width of the pass band of an amplifier, and the total noise output. As the bandwidth of a circuit is increased, the total circuit noise increases, resulting in a relatively poorer signal-to-noise ration in a wide-band amplifier. The bandwidth, therefore, usually is kept as narrow as practicable to obtain the best possible signal-to-noise ratio consistent with other circuit requirements.

d. Circuit Selection. A cascade amplifier is a series of individual amplifier stages through which the signal passes in succession. When a wide band pass and a high gain are required, it is not practical to use single-tuned high-Q cascade amplifier stages, all resonant at the same frequency. Such simple circuits cannot provide the required bandwidth, and it is necessary to use other methods to achieve the needed result. Methods used to obtain wide bandwidths with reasonable gain figures include stagger-tuning, overcoupling between interstage transformer windings, loading of tuned circuits with added shunt resistance, and the use of degenerative feedback. All of these methods depend on the requirements of the application involved. Stagger-tuning, in which each amplifier stage is tuned to a different frequency, is used in many wide-band amplifiers, because it can be adjusted for good performance with a simple amplitude-modulated signal generator and output meter. The resonant frequency and gain of each stage is adjusted to produce uniform over-all gain within the pass band of the complete amplifier. This results in a pass band much wider than that of any one stage. Figure 67 shows the over-all frequency response

of a wide-band i-f (intermediate-frequency) amplifier, and the response and gain of each stage. In this amplifier, stage *C* has a relatively low Q and a low voltage gain. It is tuned to 23.4 mc, which is the center frequency desired. Stages *B* and *D* have a somewhat higher Q and greater voltage gain than stage *C*. They are tuned to frequencies (22.3 and 24.5 mc) somewhat above and below the center frequency. Stages *A* and *E* have a still higher Q and voltage gain than stages *B* and *D*. They are tuned to 21.8 and 25.0 mc respectively. The over-all gain and pass band of this amplifier are indicated by the dotted line. Some television-receiver i-f amplifiers are similar to this, with certain modifications necessary for receiving that particular type of program transmission.

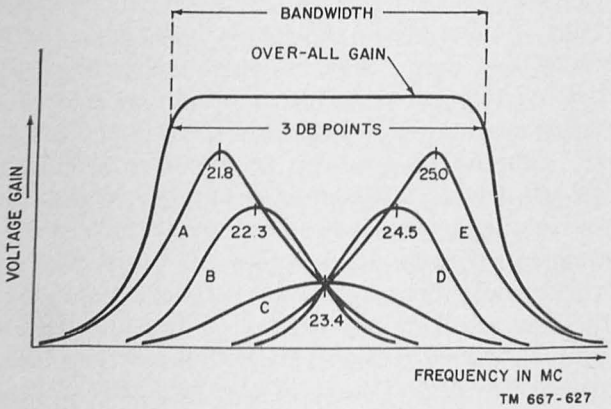

Figure 67. Stagger-tuned i-f amplifier response.

e. Adjustment of Wide-Band Amplifiers. The servicing and maintenance of amplifiers used in this frequency range require careful attention to procedure. The circuit adjustments often are critical, and many of the techniques involved may be unfamiliar, since they rarely are used in connection with lower-frequency equipment. As a general rule, when raising the operating frequency and/or bandwidth, the adjustments made in amplifier stages as well as in complete amplifiers become increasingly critical. This is because of the greater relative importance of such factors as component variations, stray lead inductance, and stray circuit capacitance.

47. Stability

a. General. The stability of an amplifier depends on the ability of the stage to amplify without tending to oscillate, its ability to be tuned over a range of frequencies without requiring neutralization, and its maintenance of constant-frequency characteristics under changing conditions of temperature, voltage, and positive and negative feedback. To insure stability in amplifiers for this frequency range, extreme care in the design, construction, and maintenance of such equipment is necessary. A relatively small change in the electrical value of a part, the relative positioning of the parts, or the efficiency of the shielding can produce a large change in performance. High gain often is required in apparatus which is physically small, making the problem of controlling feedback particularly acute. Although triodes are desirable because of their low noise and relatively high figure of merit, their large plate-grid capacitance causes enough feedback to make stable operation hard to obtain. This is especially true in the higher portion of this frequency band. Neutralization is used in many cases, but it is almost impossible to obtain complete neutralization over a wide frequency range.

b. Practical Methods. One method of minimizing this problem is by means of the grid-isolation, or grounded-grid circuit, which is useful in coaxial circuits. Tetrodes or pentodes are used wherever possible, but it is practicable to do this only in the lower portion of the frequency band. These tubes, with their lower feedback capacitance, do not eliminate the need for neutralization entirely, but minimize it greatly. Therefore, the effects of neutralization and tube capacitance with changing frequency are not serious. Some transmitting tetrodes are designed to be selfneutralizing over a relatively wide frequency range. Frequency drift caused by thermal changes can be fairly well compensated by the use of temperature-compensating capacitors. The temperature coefficient of these special capacitors must be given careful consideration for operation in this frequency range. Poor circuit adjustments and changes resulting from factors other than temperature changes may lead to regenerative feedback, or oscillation. Operational stability occasionally is increased by the use of distributed-property circuit impedances, where space considerations permit.

48. Frequency Considerations

a. General. In evaluating phenomena in the 30- to 1,000-mc band, it is convenient to consider the band as being divided into a lower- and a higher-frequency range. The transition between

the two bands takes place in the region between 75 and 450 mc (fig. 68), because this is a natural dividing line between distinct types of physical circuit configurations. No sharp line of demarcation separates these ranges; they are approximate, arbitrary, and based on certain circuit characteristics which change gradually as frequencies are increased.

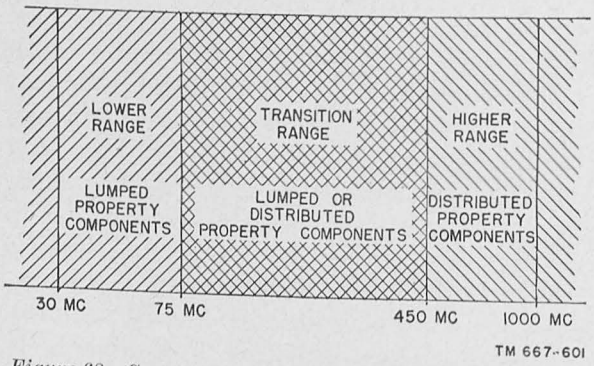

Figure 68. Component breakdown of 30- to 1,000-mc range.

b. 30- to 450-Megacycle Band. In the lower portion of the 30- to 450-mc band, most amplifiers are similar to those operating at lower frequencies. Cathodes generally are at or near ground potential, control grids are biased negatively, and similar circuit conditions prevail. The use of conventional lumped-property capacitors and inductors is almost universal at these frequencies. The greater efficiency and stability of distributed-property circuit elements are outweighed by the disadvantage of their large and cumbersome physical size. Amplifiers for higher frequencies use tubes having lower transit time, lead inductance, and interelectrode capacitance. Components, particularly inductors, must be designed carefully; accurate physical layout of parts and the use of short lead lengths in circuit wiring are important. The power sensitivity and voltage gain of tetrodes and pentodes are greater than those of triodes. Therefore, it is desirable to use them in any application where their electrical limitations and somewhat lower mechanical and electrical ruggedness permit. The use of lumped-property components, such as butterfly tuners, offers the advantages of compactness and ease of mechanical adaptability to wide-range tuning. Most of this added flexibility results from smaller size and compact construction. Where space is not severely limited and electrical efficiency and stability are important, distributed-property elements are used more frequently.

c. 450- to 1,000-Megacycle Band. At frequencies above 400 mc, distributed-property circuit elements are used almost exclusively. The majority of these are of the coaxial type since their size at these frequencies is not objectionable, and their advantages in terms of reliability and efficiency are highly desirable. The lumped-property components available are unstable and have low efficiency. Distributed-property circuitry is used at these frequencies because the irreducible capacitances and inductances of tubes, circuit wiring, and other components become a major factor in over-all circuit design. Since tetrodes or pentodes which will operate with a low noise output at the higher part of the 450- to 1,000-mc band have not yet been developed, the triode is used almost exclusively. Triodes have excellent noise characteristics, are mechanically rugged and reliable, and are less subject to microphonics than tetrodes or pentodes. Another advantage is the relative simplicity of the circuitry required, since no provision is needed for extra voltage supplies and bypassing for screen and suppressor grids.

Section II. VOLTAGE AMPLIFIERS

49. General

Voltage amplifiers for frequencies between 30 and 1,000 mc are used to increase the amplitude of a desired signal to a value great enough to operate a detector or a demodulator. In receivers, signal generators, and measuring instruments, the concern is not with available power gain, but with the voltage amplification of a desired signal, while simultaneously amplifying noise and undesired signals as little as possible. The relative emphasis placed on the various factors affecting voltage amplification changes as the frequency increases, and to some extent with the amplitude and character of the signal. Therefore, detailed consideration of these factors is needed before practical examples of voltage-amplifier circuits can be properly discussed.

50. Voltage Gain

a. General. Almost all voltage amplifiers are operated under class A conditions. The major factors on which voltage gain per stage is dependent are the specific characteristics of the tube used, the input and output impedances, and the bandwidth for which the stage is designed. In some circuits, noise figures also must be considered as a limiting factor in the determination of voltage gain. However, beyond the first or second stage in cascade amplifiers, the noise figure is low enough in relation to the signal amplitude to be neglected.

b. Operation Below 450 Megacycles. At frequencies up to 250 mc, circuits similar to those used at lower frequencies are practical. The voltage gain in amplifiers with a bandwidth of 2 or 3 mc will range from 40 to 50 at 30 mc and from 8 to 10 at 215 mc. Triodes can be used successfully in this frequency range, but it is more common to use pentodes, such as the 6AK5 or 6CB6. The voltage gain of a triode is considerably lower, making it necessary to use a greater number of amplifier stages to obtain a given total gain. A factor limiting the use of pentodes at higher frequencies is their noise figure. In general, pentodes operating at frequencies up to 250 mc give greater voltage gain than triodes. Because of their poor noise figure, pentodes are not used in the upper part of this frequency range where the noise level is approximately that of the desired signal.

c. Operation Above 450 Megacycles. In the frequency range from 300 mc to 1,000 mc, the use of triodes and distributed-property circuit elements becomes essential. Reasonably good gain and noise figure can be obtained with triodes when the signal level is so low that it is close to the level of the noise in the circuit. Above 500 mc, concentric-line circuits and special lighthouse, rocket, pencil, or disk-seal planar type triodes are used to obtain voltage gain with an acceptable noise figure. One of the features of the concentric-line circuit is the ease with which a shielding and isolating effect can be obtained in grounded-grid configurations. No practical pentodes have yet been developed for use as voltage amplifiers in such circuits. The voltage gain to be expected with triodes in circuits containing concentric-line sections usually does not exceed 3 to 12. Although higher gain can be obtained at the lower end of the frequency range, the gain declines rapidly as the frequency increases because of lowered circuit Q and decreasing tube efficiency.

d. Voltage Versus Bandwidth. When comparing the performance of different tube and circuit combinations, it is useful to have a fairly simple method of assigning a relative figure of merit. If this figure of merit can be made constant for a given tube and circuit, independent of operating frequency and other variables, better results can be obtained. Such a figure of merit for a single amplifier stage is called the *gain-bandwidth product.* To increase the bandwidth of a resonant circuit, it is necessary to lower the Q of the circuit, and often to reduce its voltage gain. This means that the gain of the stage or circuit is inversely proportional to the bandwidth of that stage. Since the bandwidth increases as the gain decreases, the area under the gain-versus-response curve (fig. 69) always remains the same. For a given configuration, A, the product of gain times bandwidth is a constant. It can be shown mathematically that, for a single-tuned amplifier stage, the gain-bandwidth product is equal to g_m, the tube transconductance in micromhos, divided by 2π times the total circuit capacitance in $\mu\mu$f.

Thus,

$$A \times \text{bandwidth} = \frac{g_m}{2\pi C}$$

For example, in a circuit using the 6AK5 pentode, the tube has a g_m of 4,500 micromhos, and C, the total circuit capacitance, is 11 $\mu\mu$f.

$$A \times \text{bandwidth} = \frac{4500}{6.28 \times 11} = 65.2$$

Therefore, the gain-bandwidth product is 65.2, which is expressed in megacycles. This means that if the required bandwidth is 10 mc, a voltage gain of 65.2/10, or 6.52 could be obtained at the center or resonant frequency. If the bandwidth is 5 mc, a gain of 65.2/5, or 13.04 mc, is possible. In an amplifier consisting of a cascaded series of single-tuned amplifier stages, all resonant at the same frequency, the over-all response band becomes narrower as the number of stages is increased. Therefore, the bandwidth of the individual stages must be far greater than the required over-all bandwidth of the combination. Examination of the formula indicates that the relationship between transconductance and capacitance here is the same as that of the *tube* figure of merit. Thus, it follows that, if circuit impedances are maintained constant, the gain-bandwidth product of an amplifier is governed by the selection of the

tube used; if the tube has a higher transconductance or lower capacitances, then the gain-bandwidth product will be increased.

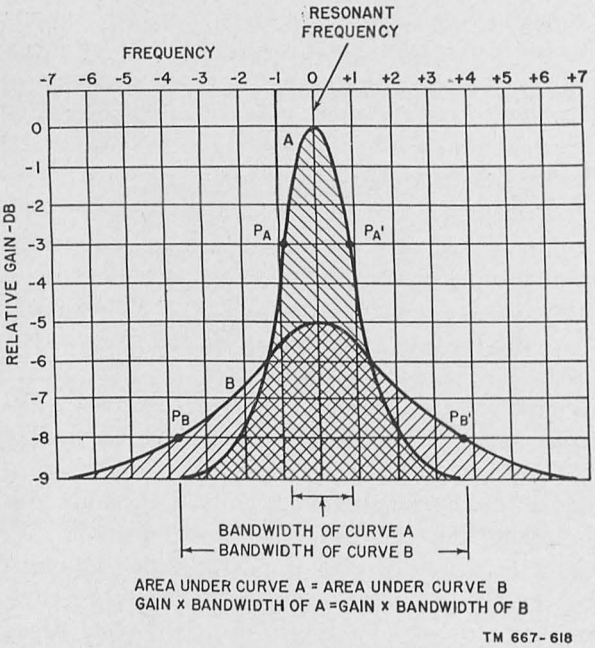

Figure 69. Gain versus response curve.

51. Noise Figure

a. Noise figure is a relative measure of merit of an amplifier or a receiver which permits comparison of various circuit arrangements, without regard to absolute gain or bandwidth. It is equal to the product of the reciprocal of the gain times the ratio of the output noise to input noise. Expressed mathematically:

$$\text{Noise figure} = \frac{N_{\text{input}}}{N_{\text{output}}} \times \frac{1}{\text{Gain}}.$$

It is the ratio of the noise output of an imaginary perfect stage having a specified gain, bandwidth, and input, to the noise output of the stage under consideration, with identical gain, bandwidth, and input conditions.

b. In considering the limiting factors applying to voltage amplifiers operating in this frequency range, noise figure begins to assume primary importance. At lower frequencies, the level of atmospheric noise is high compared with circuit noise in the receiver, and the signal-to-noise ratio of a received signal almost always is established in the antenna. With well designed receivers, this holds true even with simple antennas up to about 50 mc, provided the antenna and receiver input are coupled properly to the transmission line. With high-gain antennas, this frequency limit is somewhat higher. At higher frequencies, the noise contributed to the composite signal by the input circuit and first r-f amplifier stage becomes the limiting factor in determining how weak a signal can be received satisfactorily. When amplifying a weak signal in the 50- to 1,000-mc range, the ratio of signal to noise is established in the first amplifier stage, since all the succeeding amplifier stages amplify both signal and noise equally. An exception to this statement is where the second stage is a mixer, which always has considerably higher internal noise than the same tube operated as a straight amplifier. At times, the mixer stage is found to be so noisy that it must be preceded by two r-f amplifier stages to furnish sufficient gain that the level of the signal entering the mixer will greatly exceed the noise introduced by the mixer itself.

c. The noise figure exhibited by a particular stage depends partly on the tube used, the circuit configuration, and the precision with which circuit adjustments have been made. Generally speaking, better noise figures can be obtained with triodes than with pentodes. The noise figure obtainable with a given tube increases as the operating frequency is raised, because of cathode lead inductance, transit time, and similar factors.

52. Practical Voltage Amplifier Circuits

a. General. There are several voltage amplifier circuits, each of which is designed for a particular application. The cascode circuit is particularly suitable in cases where a weak signal is to be amplified, since it has an excellent noise figure and the gain of a pentode, when both sections of the amplifier are considered. The pentode amplifier circuit is well adapted where a relatively poor noise figure is tolerable, because it has a good gain-bandwidth product and, compared with the cascode circuit, is of simpler construction.

b. Pentode I-F Amplifier for 60 Megacycles.

(1) The schematic diagram (fig. 70) shows one stage of a 10-stage, 6-mc, i-f strip used in the receiver portion of an automatic-tracking radar system. A 6AK5 pentode is used, because the operating frequency is well within the limits for successful pentode operation. It has ample gain, the noise figure is acceptable, and the circuit is simple and easy to construct. All of the stages are similar;

however, four of them have minor variations to provide for control of the amplifier gain. The over-all bandwidth of the 10-stage amplifier is 12.5 mc. The gain of each stage is approximately 11 db. To obtain the required over-all bandwidth, the bandwidth of each stage is increased to about 25 mc, by means of resistors R1 and R3 across the tank circuits. The ratio of primary Q to secondary Q in the interstage transformers has been adjusted to a value of 2.2 : 1, since it has been established experimentally that this value is optimum for the best possible gain, while retaining reasonably small sensitivity to changes in component values.

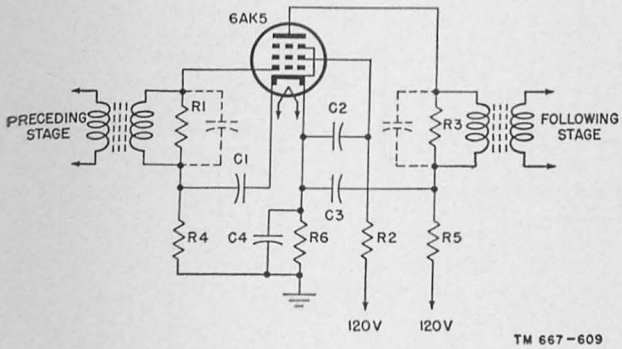

Figure 70. Schematic of 60-megacycle intermediate-frequency amplifier.

(2) Tuning both grid and plate circuits gives added advantages in this respect, and allows a better gain-bandwidth product. Inductive interstage coupling also eliminates the interstage coupling capacitor, thereby decreasing the grid-circuit time constant. The input and output circuits of an amplifier stage are more or less independent, since the tuned circuits do not have to be returned to ground, but may be returned directly to the tube cathode. The 6AK5 tube has the cathode connection brought out to two separate tube pins; one is used for the input circuit and one for the output circuit. This provides a lowered cathode lead inductance effect, less coupling between input and output circuits, and reduces the undesirable degenerative feedback caused by the common-cathode connection.

(3) The low r-f potential end of the grid-tank coil is isolated from ground by resistor R4, and bypassed directly to the cathode through capacitor C1. The plate and screen are directly bypassed to the other cathode connection through capacitors C3 and C2. Capacitor C4 bypasses the cathode circuit to ground. This minimizes circulating r-f currents in the chassis, and reduces coupling between stages of the amplifier.

(4) Button- and feed-through capacitors are used for bypassing and all parts are arranged for shortest lead lengths and minimum radiation pick-up. Plate- and screen-supply filter resistors R5 and R2 pass through rubber grommets in the chassis, thus allowing the power-supply circuits to be isolated from the r-f circuits by the metal chassis. Figure 71 shows the parts placement of this amplifier.

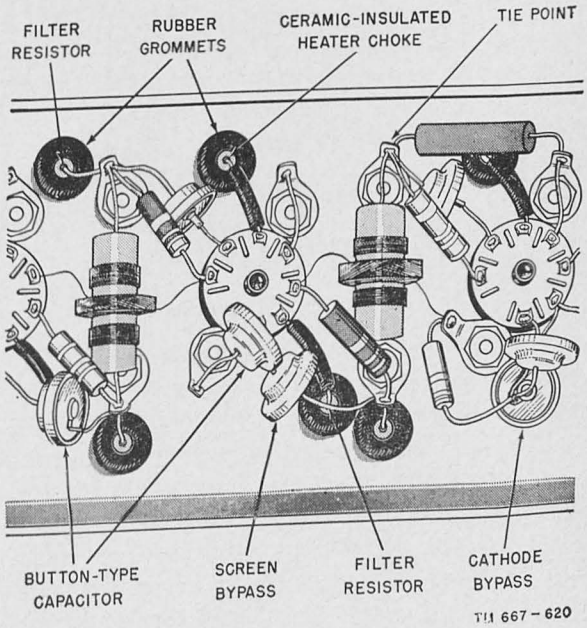

Figure 71. Intermediate-frequency amplifier, 60-megacycles.

c. Neutralized Push-Pull Triode Amplifier.

(1) Although the voltage gain for triodes generally is lower and their circuitry complicated by the need for neutralization, they frequently are used as voltage amplifiers in the 30- to 1,000-mc frequency range to obtain a better noise figure. A pair of triodes in push-pull often is used

221643°—52——6

for the input stage of an r-f amplifier, since it furnishes a simple method of utilizing the input signal delivered by a balanced antenna transmission line.

(2) An amplifier of this type using a *6J6* twin triode is shown in figure 72. The input and output tank circuits are tuned by capacitors *C*1 and *C*2, which can be of the semibutterfly type. The center point between the two capacitors forming *C*1 is at ground potential and may be grounded without affecting the operation of the amplifier. Cathode bypass capacitor *C*5 usually is a disk-type ceramic. The neutralizing capacitors, *C*3 and *C*4, are used in a conventional cross-neutralization connection. The carbon resistor, *R*1, is noninductive. When a wide band pass is required, additional resistance may have to be placed across the plate-tank circuit to increase the bandwidth. Short lead lengths and physical relationship of parts are important. The selectivity of this circuit is good.

This arrangement combines the desirable features of both pentodes and triodes, eliminating some of the undesirable features of each. It has the high-gain, high-impedance input, and stability of a pentode, but the low noise figure of a triode. For optimum performance, the first stage should be neutralized, but such neutralization is neither difficult nor critical. The neutralization is not needed for stability, but is used because it improves the noise figure. The amount of improvement increases with frequency, being negligible at 30 mc, and rising to as much as 3 db at 200 to 300 mc. The appearance of one type of cascode-circuit construction is shown in figure 74. It is built as a separate unit because it was designed to replace the existing input stages of a radar receiver. This circuit can be used for the same sort of applications as the neutralized push-pull triode amplifier. Comparatively, it is easier to design and adjust, is more stable in operation, and has a wider band pass with equal gain. The somewhat modified and improved version of the basic cascode circuit in figure 75 was designed for use as an r-f amplifier, utilizing a 6BK7 twin triode tube. Other tubes having similar electrical characteristics and equally good shielding between the two triode units can be used. The cathode of V1 is grounded. Capacitor C5 tunes the input tank. Inductor L3 and resistor R2 develop bias voltage for the tube. Inductor L2 in the plate circuit tunes out stray wiring and heater-cathode capacitance; the L2-C3 inductance-capacitance network is for neutralizing purposes.

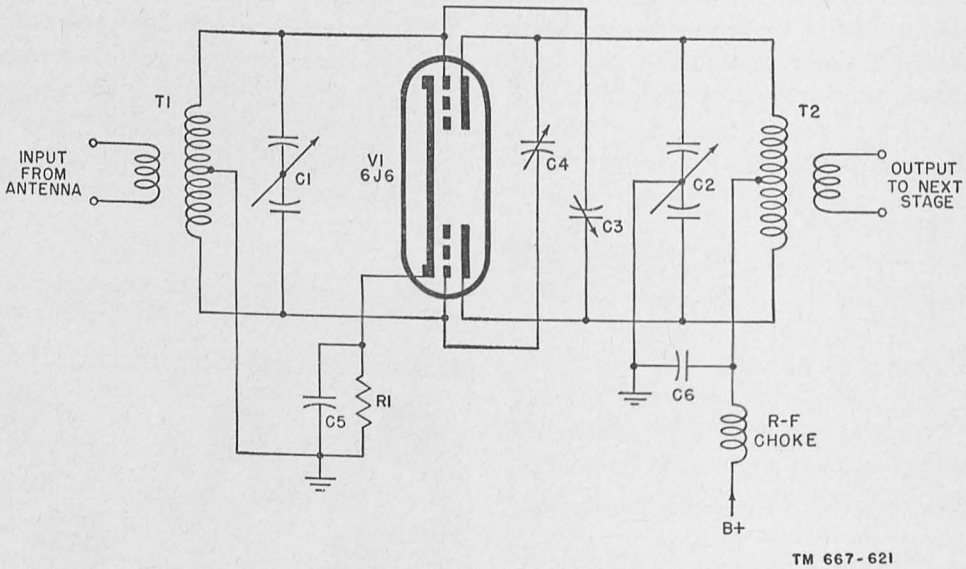

Figure 72. Schematic of neutralized push-pull triode voltage amplifier.

d. Cascode Amplifier Circuit. The *cascode* (not to be confused with *cascade*) amplifier has been developed as one method of obtaining a satisfactory noise figure and adequate gain. The simplified circuit (fig. 73) uses two triodes which are effectively in series. V2 operates similarly to a conventional grounded-cathode amplifier. The output from its plate is applied to the cathode of V1, and the grid is grounded for r-f voltages.

Capacitor C2 grounds the grid of V2 for signal frequencies, and resistor R1 furnishes grid-leak bias to the tube. Plate voltage for both tubes is fed through the output tank, consisting of capacitor C1 and inductor L1. The output is taken from the plate of the upper tube.

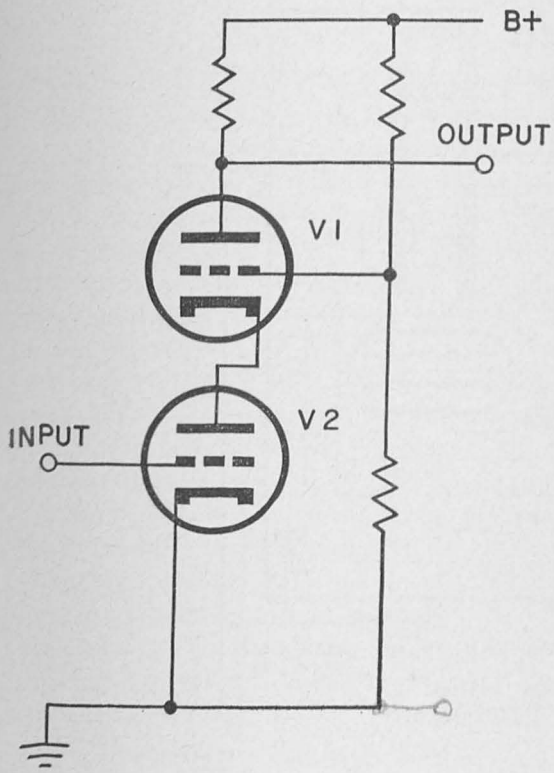

TM 667-622

Figure 73. Simplified schematic, cascode circuit using two triodes.

e. Grounded-Grid Triode Amplifier.

(1) A common application of grounded-grid triode amplifiers (fig. 76) is as an r-f input stage in a uhf receiver. This circuit is used in radio direction-finding equipment for gathering data from radiosonde balloons. The tube is a 6J4 miniature triode, and line sections are used as circuit elements. The operating frequency is slightly under 400 mc.

(2) The entire stage is well shielded from the rest of the receiver. The signal is applied to the resonant line-section tank circuit L17, at the point of required impedance. From the tank, the signal is coupled to the tube cathode, which is isolated from the plate by the shielding

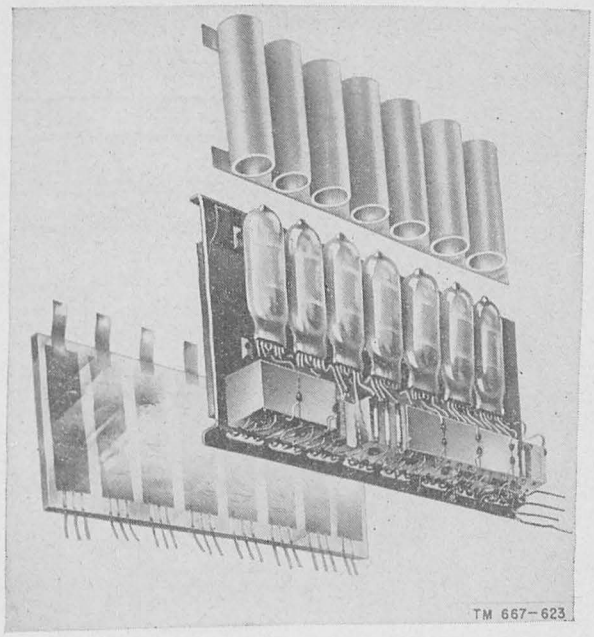

Figure 74. Cascode amplifier used in radar receiver.

effect of the grounded grid. Capacitors C4 and C7 bypass the cathode; C8 and C9 bypass the tube heater. Resistor R2, across capacitor C7, furnishes bias voltage. Capacitor C10 is used to tune the

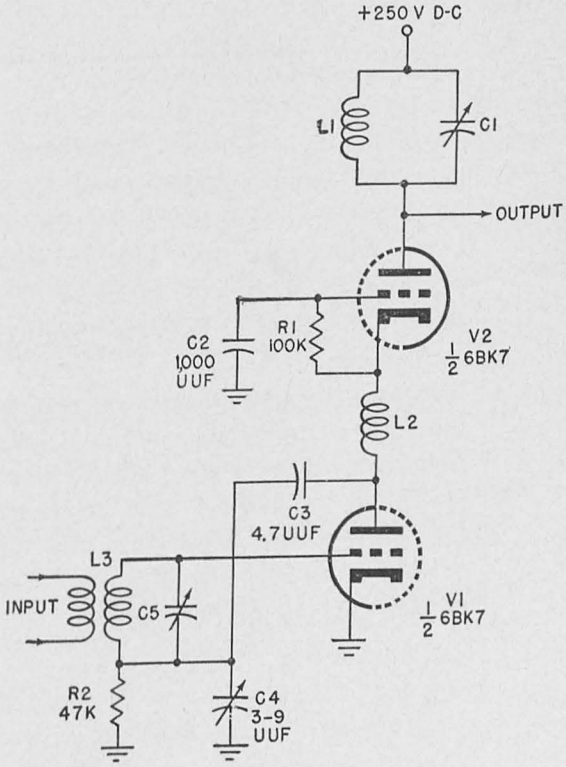

TM 667-624

Figure 75. Schematic of cascode amplifier using twin triode.

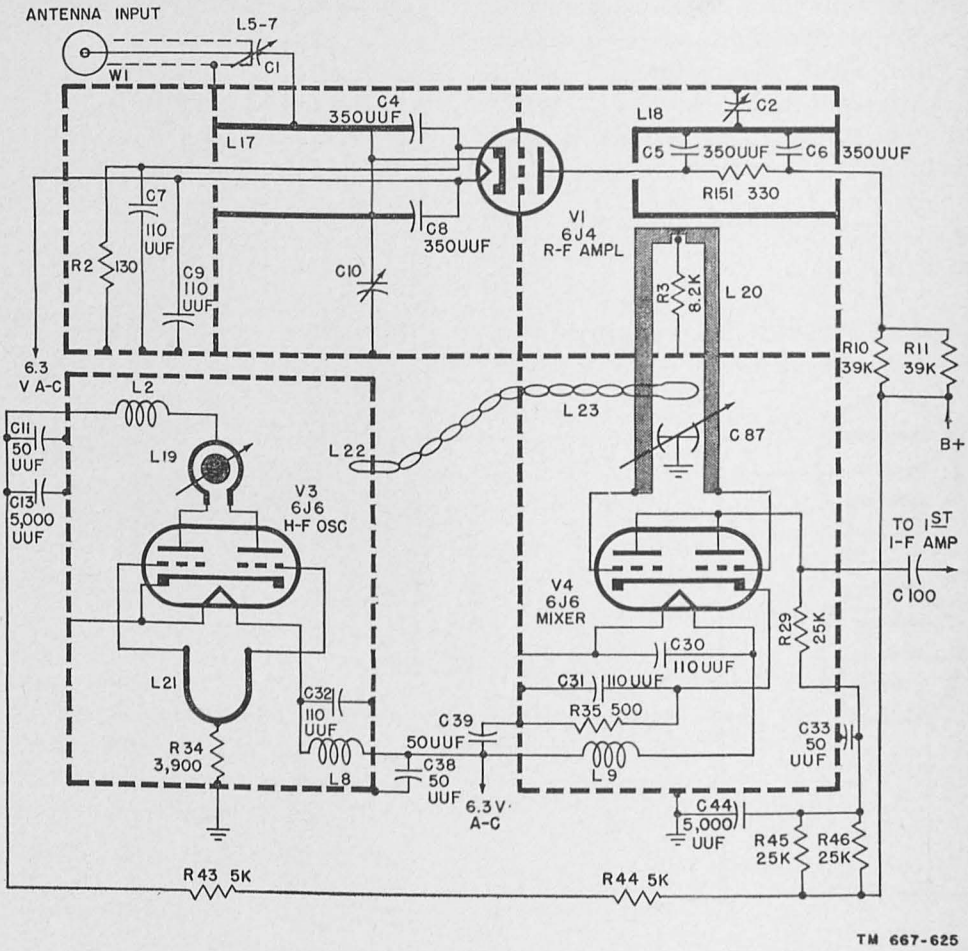

Figure 76. Schematic of grounded-grid triode amplifier.

line. The output signal is passed from the plate through capacitors C5 and C6 to the output tuned line, L18, which is adjusted by means of capacitor C2. Resistor R151 serves to damp parasitic oscillations.

(3) The use of resonant-line sections reduces the effect of lead inductance and stray capacitance to the point where they are no longer troublesome. The relatively low plate-cathode capacitance and the shielding effect of the grid allow the circuit to operate without oscillation, and the use of neutralization, with its attendant difficulties, is unnecessary. The grounded-grid amplifier unit is shown in figure 77.

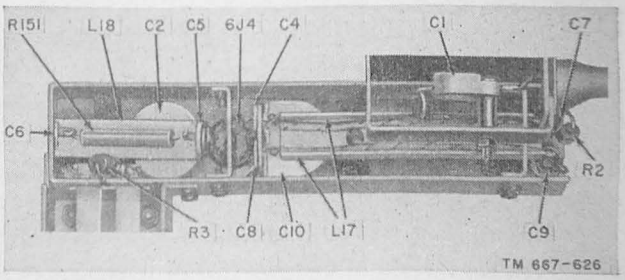

Figure 77. Grounded-grid triode amplifier.

Section III. POWER AMPLIFIERS

53. General

In r-f power amplifiers, the operating load impedance usually is adjusted to a value that permits the tube or tubes of the stage to operate at high efficiency. The load-impedance value for efficient *power* amplification is always much lower than that required for maximum voltage gain, and the r-f voltage developed across the load is relatively low. The r-f *current* in the circuit is relatively high because of the low load impedance, and all of the components and connectors that carry the output power must be capable of passing this current without serious losses and heating. Although power amplifiers may be operated class A or AB, almost all r-f power amplifiers operate class B or C, class C being by far the most common. This is possible because the harmonic distortion of the amplified wave in class C amplifiers can be tolerated, or actually is wanted. Since such amplifiers draw grid current, considerable driving power must be supplied to the grid circuit, as compared with the relatively negligible driving power required by class A amplifiers. Power amplifiers in this frequency range are used as frequency multipliers, driver stages, and r-f power output tubes. They are used also in signal generators and other radio instruments. A power amplifier which is not amplitude-modulated can be operated at higher input power than one that is amplitude-modulated. Important applications of amplifiers that are not amplitude-modulated are the c-w (continuous-wave) radiotelegraph and frequency-modulation communication systems.

54. Comparisons of Tube Types

a. General. The discussion here covers those characteristics of vacuum tubes which have significant effects on their performance as power amplifiers. The performance figures used are calculated, and do not take into account various tube and circuit losses; they are, therefore, somewhat better than those measured in actual circuits.

b. Power Gain. Power gain is the ratio of the power output of an amplifier stage to the driving-power input. The power gain of triode r-f amplifiers is moderate, ranging from 5 to 50. The power gain of tetrode amplifiers ranges from 10 up to about 200, and that of pentodes from approximately 50 to 300. Few pentodes are currently available that are capable of as much actual output as certain tetrodes and a number of triodes, particularly in the upper portion of the 30- to 1,000-mc band. *Theoretical* power gains for all tubes are much higher, ranging up to 1,000 or more for pentodes, but such gains cannot be attained readily in practical circuits. The power gain of any amplifier using a given tube, whether triode, tetrode, or pentode, falls off at an increasing rate as the operating frequency rises.

c. Driving-Power Requirements. Since the power gain of a triode is much less than that of a tetrode or pentode, a much greater grid-driving power must be furnished the triode in order to obtain the same power output. The driving power required in practical tertode and pentode power-amplifier circuits may be as little as 10 percent of that required for triodes. For certain tubes, it may be as little as 1 to 3 watts, although as the operating frequency increases, driving-power requirements rise rapidly. For example, a 4–125A tetrode tube requires about 2.5 watts of driving power to produce 375 watts output at 30 mc. At 200 mc, the same tube requires about 5 watts to produce 300 watts output.

d. Tube Operating Efficiency. The measured plate operating efficiency is equal to the plate power output divided by the plate power input, and is expressed in percent. In this frequency range the plate operating efficiency is about the same for all three kinds of tubes. It commonly varies from about 75 or 80 percent at the lower frequencies to about 30 percent at the highest useful frequency of a given tube.

55. Special Circuit Considerations

Stable amplifier operation in the upper portion of the 30- to 1,000-mc band requires an improved method of electrically separating the input and output circuits to avoid feedback. The use of grid isolation, or so-called grounded-grid circuitry, offers one solution to the problem. Although the grid may be above ground for d-c, it is effectively grounded for radio frequencies, and acts as a separating shield between the cathode and plate. The input signal is applied between grid and cathode, and the cathode must be above ground for r-f by the amount of the signal voltage. The grid becomes the element common to both input- and

output-signal circuits, rather than the cathode. The circuit requires more driving power than the grounded-cathode circuit, which may make design of the preceding stage more difficult. Also, if the stage is modulated, it is necessary that the preceding driver stage also be modulated, if complete utilization of the carrier power (100-percent modulation) is to be had. This is true because part of the driving power supplied to the input circuit of the grounded-grid amplifier appears in the output as useful power.

56. Operation below 450 Megacycles

Because of their electrical ruggedness and the simple circuitry required, triode amplifiers are used in the lower portion of this range, although they have lower power sensitivity than multigrid tubes, and require neutralization in conventional circuits. Tetrodes and pentodes have higher power gain, but are more easily damaged by overload or other misadjustment, and require more complex circuitry because of the necessary voltage supply and bypassing for the added grids. In amplitude-modulated stages, the screen supply must be modulated also. Lumped-property components are readily usable in plate- and grid-tuned circuits with either triode or multigrid tubes, up to 75 mc. With triodes, push-pull circuits frequently are used because the symmetrical arrangement makes effective neutralization and stability easier to attain.

57. Operation above 450 Megacycles

Power amplifiers operating above 400 to 500 mc utilize coaxial or concentric-line circuitry almost exclusively. Few currently available tetrodes and even fewer pentodes are effective as power amplifiers above 500 mc. However, their higher power gain and fairly easy neutralizing capabilities make them desirable for use at all frequencies where they can operate efficiently. At present, triodes are used much more extensively than tetrodes or pentodes above 500 mc, particularly if more than a few watts output is needed. Both single-ended and push-pull coaxial configurations are common in the grid-isolation circuit arrangement. In this frequency range, triodes almost always outperform the multigrid tubes, and have the added advantage that the complications of voltage supply and bypassing for the screen and suppressor grids do not exist.

58. Practical Power Amplifiers

In the design of any power amplifier, the designer takes into consideration such factors as needed power output, driving power available, permissible size and weight, power-supply requirements, tuning range, type of service, and required service life and reliability. Some of these factors frequently conflict, requiring compromises in the design. As an illustration, a pentode amplifier designed to operate at 70 mc could be constructed with line sections for the tank circuits, in place of lumped-property components. This would provide somewhat greater efficiency, but would make the amplifier bulkier and heavier, adding to transportation and installation problems. If the amplifier were a part of a permanent, fixed installation, where bulk and weight were not important considerations, the use of the more efficient line-section tank circuits probably would be justified.

a. Lumped-Property Pentode Amplifier for 70 to 100 MC. A lumped-property amplifier, consisting of a pair of 4E27A pentodes connected in a push-pull circuit, is shown in figure 78. The equipment is used for the purpose of boosting the transmitter output from a maximum of 50 watts to a maximum of 250 watts. The amplifier is tunable through the range of 70 to 100 mc by means of tank tuning capacitors C201 and C208. The r-f signal is brought in on a coaxial cable and applied to inductor L201, which is coupled inductively to the balanced (split-winding) grid-tank inductor L202. Neutralization is accomplished by connections from each control grid to capacitive pick-up plates at the opposite tube. The plate-voltage supply for these tubes is 1,900 volts. The screen grid is regulated for 450 volts. All components are so placed that the connecting leads will be short, and the bypass capacitors, particularly C206 and C207 for the screens, are placed as close to the pin connections as possible. A no-signal bias of approximately 100 volts is connected at the center of L202. Additional bias under signal-input conditions is developed across the grid-load networks consisting of R201, C202, and R202, C203. The small number of turns in plate-tank inductors L203 and L204 and the grid-tank inductors, L201 and L202, can be seen in the top view of the amplifier (fig. 79) and the bottom view (fig. 80).

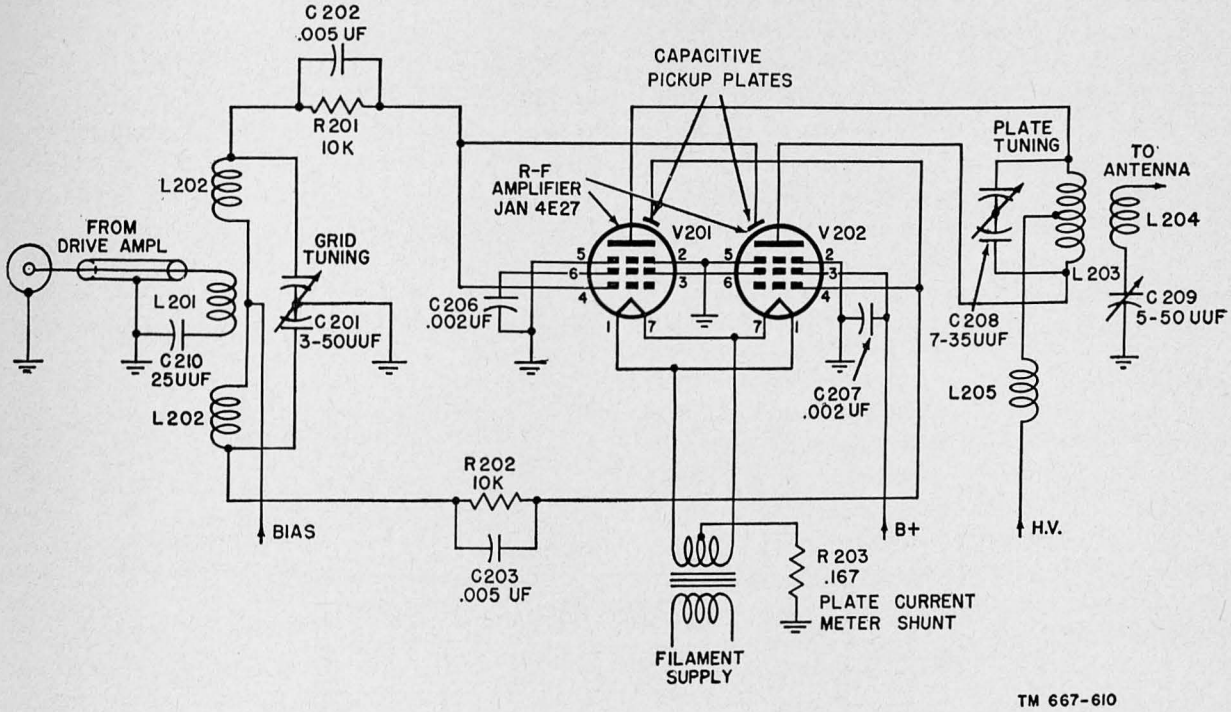

Figure 78. Schematic of lumped-property pentode power amplifier.

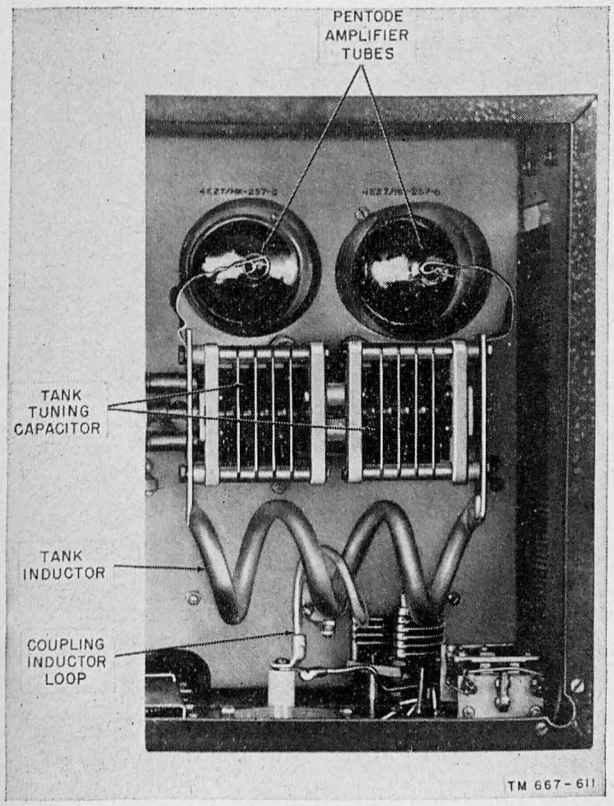

Figure 79. Top view of lumped-property pentode power amplifier.

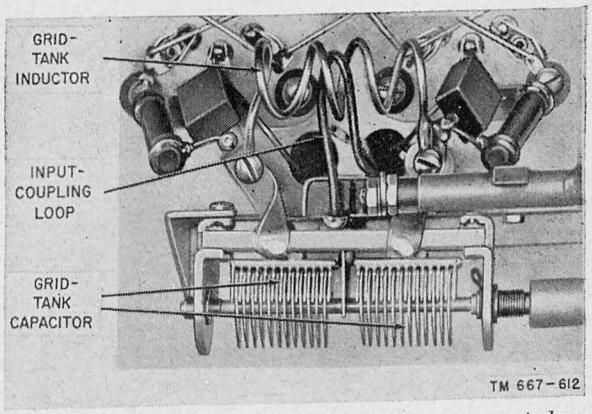

Figure 80. Bottom view of lumped-property pentode power amplifier.

b. Parallel-Line Section Beam Power Amplifier for 230 to 250 MC. A final power amplifier stage using line-section circuit elements and a dual beam power tube, 829B, in a push-pull configuration is shown in figure 81. Driving power is supplied to the tube input grids through a balanced-to-ground pick-up loop, L210, inductively coupled to the output tank circuit of the preceding stage. The five unnumbered capacitors shown in the schematic below V203 are built into the tube socket and bypass the heater, cathode, and screen

of the tube to ground for signal frequencies. The output circuit is tuned to the third harmonic of the input frequency and is adjustable over the required frequency range of 230 to 250 mc. The plate-tank circuit, L211, is a section of parallel-conductor transmission line which operates as a tuned circuit balanced to ground. It is tuned to the third harmonic of the input signal frequency, and is adjustable from 230 to 250 mc by means of variable capacitor C243. The plate voltage is connected to the tank at a point of low r-f potential, through r-f chokes L214, which are shunted by parasitic-suppression resistors R246 and R247. Bypass capacitor C210 has a low impedance at signal frequencies. The signal output power is coupled inductively to pick-up loop inductor L212 and conducted to the antenna by means of a coaxial cable. Inductor L212 is tuned by adjustable capacitor C242. This amplifier is stable, and relatively efficient over its entire tuning range. A top view of the parallel line-section amplifier is shown in figure 82.

c. Grid-Separation Triode Amplifier. Figure 83 shows a cross section of a triode power amplifier in a grid-separation circuit, using coaxial line sections constructed of metal tubing as grid- and plate-tank circuits. The high Q and excellent shielding and input-to-output isolation provided by this arrangement make efficient operation possible at frequencies as high as 3,000 mc. Tubes suitable for use in this type of circuit include the 2C40, 2C43, and 446A. The grid-tank circuit is a quarter-wave section of coaxial line formed by the concentric metal tubes, A and B. The input signal is coupled through the input coupling loop, which can be rotated to vary the amount of coupling. The line section is tunable to reasonance by moving the shorting ring, X, in or out, as indicated by the dotted arrows. The input signal voltage is developed between the grid and cathode, and the amplified signal appears in the plate-tank circuit, which is formed by the quarter-wave coaxial-line section made up of the outer surface of tube W, and the inner surface of the outer tubing, B. The output power is taken off by inductive coupling through the adjustable output coupling loop. The plate-tank tuning is adjusted by mov-

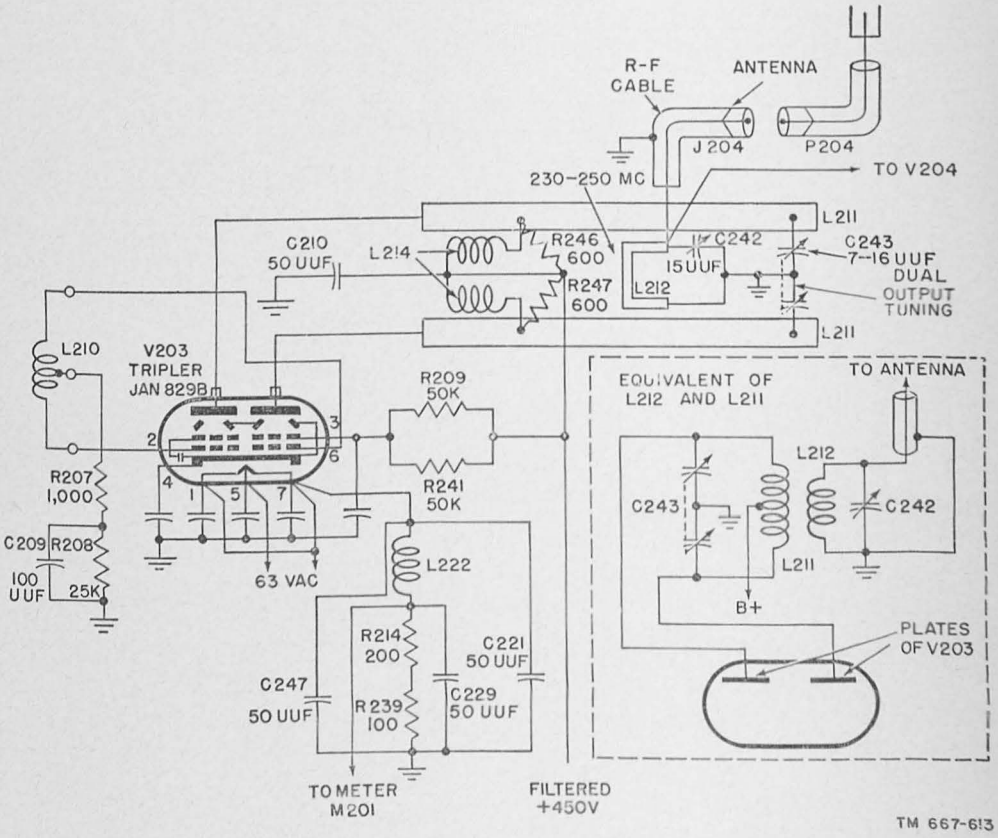

Figure 81. Schematic of parallel line-section power amplifier.

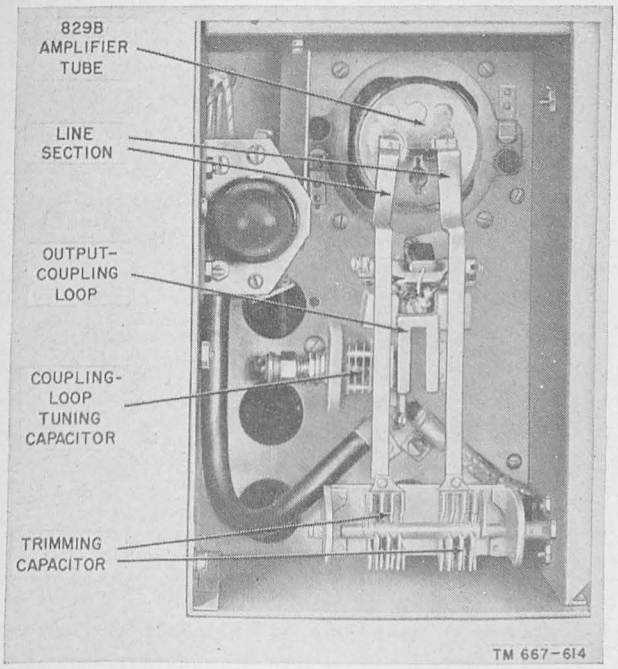

Figure 82. Top view of parallel line-section power amplifier.

ing the tuning disk, Y. The only coupling between grid and plate circuit occurs through the capacity that exists between the plate and cathode, and this is very small because of the shielding action of the grid. As a result, neutralizing is not required, and circuit operation is stable. The equivalent circuit diagram of this amplifier is shown in figure 84.

d. Cathode Follower. The fundamental operating principles of cathode-follower amplifiers for use above 30 mc are the same as those for lower frequency applications. A pentode cathode-follower amplifier is shown in the schematic diagram of figure 85. This amplifier is used to couple a pulse signal containing vhf harmonics to a low-impedance transmission line from a relatively high-impedance source. The grid return resistor, R122, is returned to the junction of R123 and R124, which are connected in series to form the cathode load resistor. The value of R123 is chosen to develop the proper negative bias for the stage. R123 and R124 in series are effectively in parallel with the line impedance, and by proper choice of value for R124, the combination can be made to match the line impedance properly. Cathode follower circuits seldom are used in the r-f power stages of communication equipment. An important feature of the cathode follower is that, whereas the voltage gain is always less than 1.0, the *power gain* is the same as in an ordinary plate-loaded amplifier circuit.

59. Summary

a. Distributed-property circuit elements can provide greater electrical efficiency at any frequency but are heavier and bulkier than practical lumped-property components.

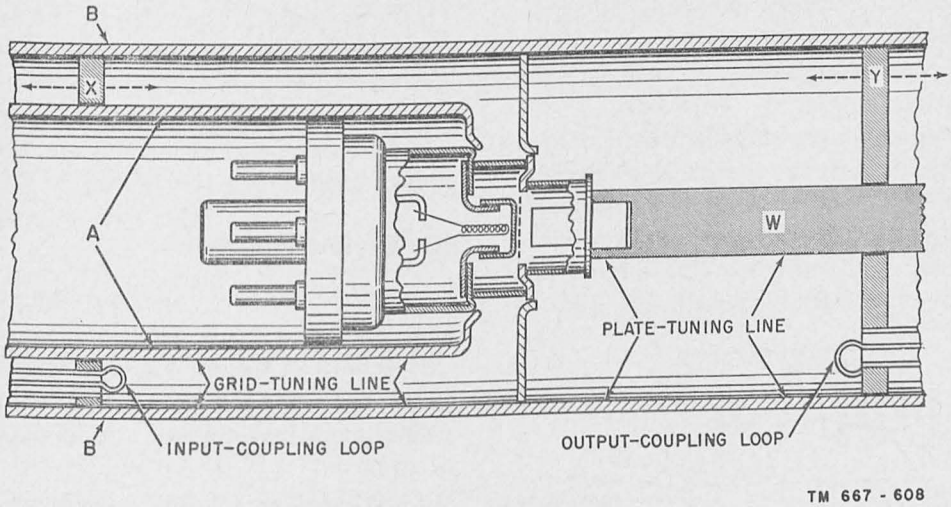

Figure 83. Cross-sectional view of coaxial-line triode power amplifier.

b. The term *wide-band amplifier* usually implies a tuned amplifier with a pass band of at least 1 megacycle.

c. Bandwidth means the band of frequencies passed by a tuned circuit or amplifier whose upper and lower frequencies are attenuated from

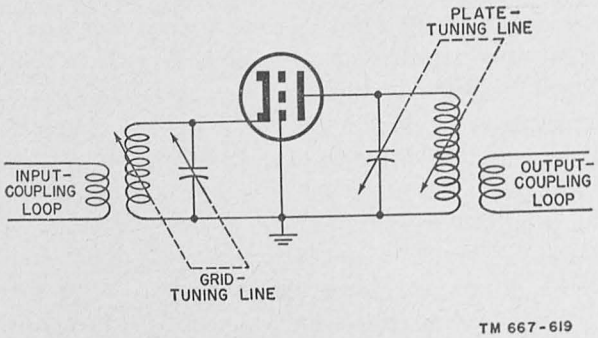

Figure 84. Equivalent circuit of coaxial-line triode power amplifier.

the peak value by not more than 3 db, or one-half the peak power. These points are known as *half-power points.*

d. As the bandwidth of an amplifier increases or decreases, the gain varies in inverse proportion to the bandwidth, causing the mathematical product of gain and bandwidth to remain constant.

e. Increasing the bandwidth of a circuit increases the total circuit noise, resulting in a relatively poor signal-to-noise ratio.

f. Because of the greater relative importance of component values, stray lead inductance, and stray capacitance, the adjustments made in wide-band amplifiers become increasingly critical.

g. Although triodes are desirable in wide-band amplifiers because of their low noise and relatively high figure of merit, their large plate-grid capacitance causes enough feedback to make stable operation hard to obtain.

h. The voltage gain per stage in wide-band amplifiers is dependent on the specific characteristics of the tube used, the input and output impedances, and the bandwidth for which the stage is designed.

i. Above 450 mc, concentric-line circuits and special lighthouse, rocket, pencil, or disk-seal

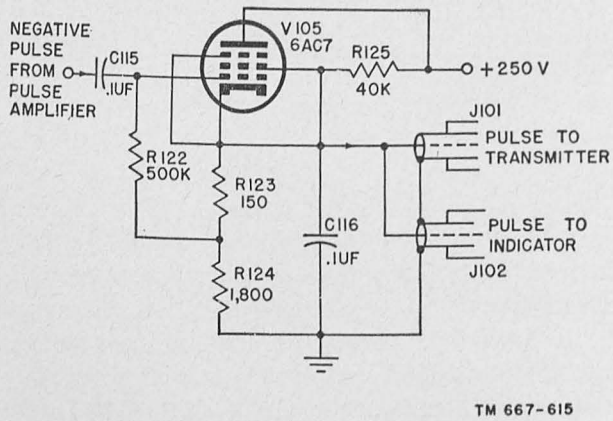

Figure 85. Schematic of pentode cathode follower.

planar type tubes are used to obtain voltage gain with an acceptable noise figure.

j. A figure of merit for a single amplifier stage is called the *gain-bandwidth product* and, for a given configuration, the product of gain times bandwidth is constant.

k. For a single-tuned amplifier stage, the gain bandwidth product is equal to the tube transconductance divided by 2π times the total circuit capacitance.

l. In an amplifier consisting of a cascaded series of single-tuned amplifier stages, all resonant at the same frequency, the over-all response band becomes narrower as the number of stages is increased.

m. Noise figure is equal to the product of the reciprocal of the gain times the ratio of the output noise to the input noise.

n. The noise figure of a given tube increases as the operating frequency is increased because of cathode lead inductance, transit time, and similar factors.

o. The cascode circuit effectively uses two triodes in series to obtain a satisfactory noise figure and adequate gain.

p. Since power-amplifiers draw grid current, considerable driving power must be supplied to the grid circuit.

q. Power gain is the ratio of the power output of an amplifier stage to the driving-power input.

r. The power gain of a given amplifier decreases with an increase in frequency.

s. At frequencies above 500 mc, triodes almost always outperform the multigrid tubes.

60. Review Questions

a. What is a voltage amplifier? A power amplifier?

b. What is a wide-band amplifier?

c. What is the percentage bandwidth of an amplifier operating at 60 mc and having a pass band of 15 mc?

d. What is a cascade amplifier? A cascode amplifier?

e. How is a stagger-tuned amplifier adjusted?

f. On what does the stability of a wide-band amplifier depend?

g. What are some of the methods used to obtain good stability in wide-band amplifiers?

h. Why are lumped-property components used at frequencies below 500 mc?

i. Why are concentric lines generally used above 450 mc?

j. If the g_m of a tube is 3,000 micromhos and the total circuit capacitance of the stage is 50 $\mu\mu$f, what will the bandwidth product equal?

k. If the required bandwidth in the previous problem is equal to 4 mc, what is the gain of the stage?

l. How is the plate-operating efficiency of a power amplifier found?

CHAPTER 7

SPECIAL OSCILLATOR CIRCUITS

61. Introduction

a. General. The oscillators used in the 30- to 1,000-mc range serve the same purpose as those at lower frequencies; that is, they generate radio-frequency energy for transmitters or a heterodyning local oscillator signal to be mixed with the incoming r-f signal in a superheterodyne receiver. Their application as r-f power sources in transmitters requires that a reasonable amount of power be available. The output generally drives one or more following amplifier stages although it may be used directly to drive the transmitting antenna. The output of an oscillator circuit may be utilized at its fundamental frequency, or at one of its harmonics or overtones. An oscillator, for purposes of this chapter, is defined as a vacuum-tube oscillator circuit, which produces an output frequency within the limits of the 30- to 1,000-mc range. This output can be the fundamental frequency of the oscillator or one of its overtones or harmonics. An oscillator circuit consists basically of an electron tube capable of providing amplification, a tuned circuit, and a feedback path capable of coupling enough in-phase energy from the output terminal of the amplifying element back to its input terminal to sustain oscillation. Figure 86 shows a simple oscillator circuit embodying the application of these basic principles.

b. Stability. Although the basic principles are the same, the circuitry and some of the parts used for oscillators in this frequency range are different from those used at lower frequencies. Excellent percentage stability of operation is an important requirement. *Percentage stability* is a measure of the percentage of the design-center frequency within which the frequency of oscillation varies, rather than the actual variation of frequency, measured in cycles, kilocycles, or megacycles. A measurement expressed in cycles is relatively meaningless, unless interpreted in the light of the

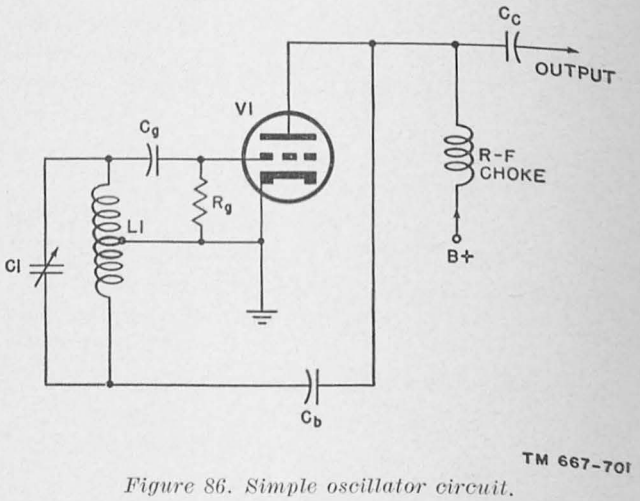

Figure 86. Simple oscillator circuit.

actual operating frequency of the circuit. For example, when an oscillator designed for 1,000 kc deviates ±20 kc from the 1,000-kc point, it is said to have a frequency stability of 2 percent; an oscillator designed to operate at 500 mc, with the same frequency stability figure of 2 percent has a deviation of ±10 mc. A deviation of 10 mc in the oscillating frequency generally is more than can be tolerated under actual operating conditions. Therefore, to make as efficient use as possible of the available frequency spectrum, and to make fairly consistent reception possible, it is necessary that the tolerances on percentage frequency stability be made progressively smaller as operating frequencies rise. It would be highly satisfactory if the same *absolute* stability could be maintained as at lower frequencies, but the attainment of this condition is impracticable.

c. Vacuum-Tube Limitations. Since the operating efficiency of vacuum tubes decreases as the frequency increases, it is necessary to use more efficient components in the external circuits, particularly in tank circuits. Some of the characteristics of vacuum tubes which increasingly tend to limit performance as the frequency is raised are interelectrode capacitance, electrode and lead in-

ductance, envelope and base dielectric losses, radiation losses, and electron transit time. The transit time tends to increase the effective series grid-circuit impedance, and to introduce unwanted phase distortion in the plate circuit. It also increases as the square of the operating frequency. The other factors introduce undesirable circuit impedances and increase shunt signal-conduction paths to ground, thereby effectively reducing the available output signal. In any given vacuum tube, there is an upper frequency limit beyond which the tube will not function satisfactorily as either an amplifier or an oscillator. The limits for each type of service are not the same, but they are related. The exact upper-frequency limit is affected to some degree by the characteristics of the components used in the external circuit; but, regardless of how efficient these may be, the limit still exists. To realize acceptable values of stability, efficiency, and usable power output, tubes must be operated considerably below the upper frequency limit. As the limit is approached, operation becomes less stable and the factors of power output and efficiency fall off rather rapidly.

62. Harmonic and Overtone Crystal Oscillators

a. General. Harmonic and overtone oscillators used for the generation of stable radio frequencies usually are controlled by crystals. Their output may be amplified or multiplied for use as a transmitter frequency, or it may be used directly, as in a receiver local oscillator. A harmonic oscillator is one in which the frequency taken from the plate circuit is an integral multiple of the operating frequency of the grid circuit, which may or may not be crystal-controlled. An overtone oscillator is a crystal oscillator that does not oscillate at its fundamental frequency, but at frequencies very close to odd harmonics of the fundamental. Special circuits or crystals cut for overtone service must be used.

b. Harmonic Oscillators. In harmonic oscillators, the tube and associated circuits operate in the normal manner, but a voltage at one of the harmonics of the fundamental frequency is taken from the output circuit. This provides low-frequency fundamental operation with either a crystal or a noncrystal oscillator, and allows a multiple of the desired frequency to be obtained at the output. It is practical to generate a frequency that can be multiplied to any frequency in the 30- to 1,000-mc band, but the circuitry involved is relatively complex and requires many parts. Adjustment and maintenance are difficult and the harmonic oscillator is used above 300 mc only for special purpose. Below 300 mc, the number of harmonic multiplying stages is small enough to justify its use. The circuit for a harmonic oscillator is shown in figure 87. This oscillator uses a 6AN5 to generate r-f for a low-power transmitter. The crystal in this arrangement is in series with the plate-grid feedback circuit, and therefore controls the frequency through its effect on the magnitude and phase of the feedback signal. The crystal is cut for 12 mc, capacitor C2 tunes the output tank for the third harmonic of the crystal frequency, and the output signal from the plate tank is 36 mc. The signal then is passed through capacitor C5 to another r-f amplifier or multiplier stage. Tuning the plate tank to a slightly higher frequency than that of the crystal harmonic insures better stability and self-starting.

c. Overtone Oscillators.

(1) Overtone oscillators should not be confused with harmonic oscillators since, in an overtone oscillator, the only frequency present at the input and output is the desired frequency. Almost any crystal can be used for overtone service; however, the power output above the third overtone is poor. The desired frequency usually is obtained directly from the mechanical vibrations of a crystal designed for overtone service, and is close to an *odd* harmonic of some fundamental frequency for which the crystal was basically cut. The crystals used may have the greater thickness typical of a crystal at a lower fundamental frequency, but act as though they have been sliced in a number of thinner layers equivalent to the overtone being used. Since it is impracticable to cut and grind crystals thin enough to vibrate at the desired frequency as a fundamental, the overtone frequency is a mechanical function of the crystal. The overtone frequency of a crystal is either above or below a harmonic of the fundamental frequency by an unpredictable amount; the fundamental frequency is ignored, and the crystal

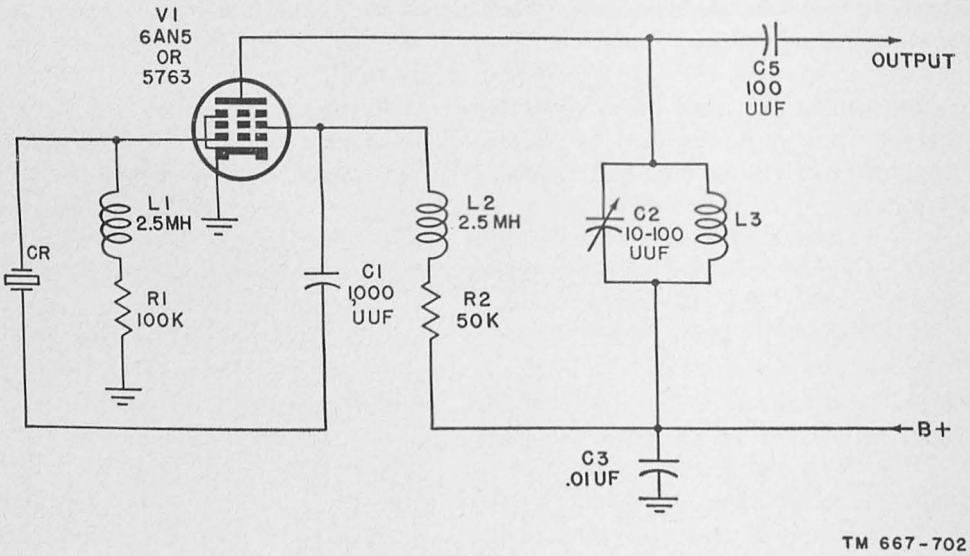

Figure 87. Crystal-controlled harmonic oscillator circuit.

is ground for, and marked with, the desired overtone value.

(2) Since the overtone crystal vibrates at the desired frequency, or at a much higher submultiple of the final frequency than conventional crystals, there are fewer spurious and sum-and-difference frequency oscillations. Less frequency multiplication is required than with conventional crystals, and thus the number of components is reduced and the circuitry is considerably simplified. For example, if an output frequency of 576 mc is desired, conventional crystal circuitry might use a fundamental crystal frequency of 6 or 12 mc, and multiply it 48 or 96 times. With an overtone crystal oscillator circuit, this could be done by using an overtone crystal frequency of 96 mc, fed through a doubler and a tripler (multiplied 6 times) to get 576 mc. The 96-mc frequency could be the ninth overtone of a 10.67-mc fundamental crystal. The lowest frequency present in this circuit would be 96 mc, as against 6 or 12 mc, using a conventional crystal circuit. For communication work, this allows channels to be spaced at much closer intervals without danger of interference.

(3) Overtone crystal oscillators exhibit excellent frequency stability in the presence of plate voltage changes, severe physical vibration, and temperature fluctuations. Smaller and more efficient equipment, with lower-power supply requirements, is feasible. Certain special circuit conditions are required for proper operation of an overtone crystal. As the overtone at which a crystal is operated increases, its effective capacitive component C decreases proportionately. This increases the ratio of the combined effects of crystal holder, wiring, and tube-input capacitances, which remain substantially constant, to the effective capacitive component. To sustain oscillations at a reasonable power level an extremely high grid-circuit impedance is required. A crystal can be broken down into electrical properties of L, C, and R. When a piezoelectric crystal is energized at a frequency below the series-resonant frequency of its own L and C, the crystal exhibits a capacitive reactance to the external circuit. By shunting the input circuit with added inductance, to make it appear inductive to the crystal, it is possible to combine the inductive effect of the input circuit with the capacitive effect of the crystal to form a parallel-resonant circuit having the desired high impedance at the selected crystal operating frequency.

(4) A circuit designed for an overtone output of 77 mc is shown in figure 88. This is the ninth overtone of a crystal having a fundamental frequency of approximately 8.55 mc. Since such a high overtone is

used, a pentode has been selected, rather than a triode, to control any tendency toward self-oscillation through the plate-grid capacitance of the tube. However, in oscillators using lower overtones, a triode will give good results. Inductor L1 is used to balance out the capacitive effect of the crystal and stray circuit capacitance, and the variable capacitor C1 tunes the circuit. The circuit is resonated at a frequency *higher* than that of the desired overtone, to insure oscillation in the correct mode and to assist the self-starting of oscillations. The resonant frequency of the grid circuit may be considerably higher than the overtone frequency; the greater the difference within the oscillating range of the circuit, the wider the range over which the plate tank can be tuned without causing self-oscillation. As the overtone is increased, the grid resonant frequency approaches the overtone frequency; therefore, the higher the overtone, the greater the likelihood of self-oscillation. The plate tank capacitor C5 is tuned to resonate with L2 at the desired overtone frequency. Thermal stability of better than one part per million over a wide range of temperatures has been obtained with this oscillator.

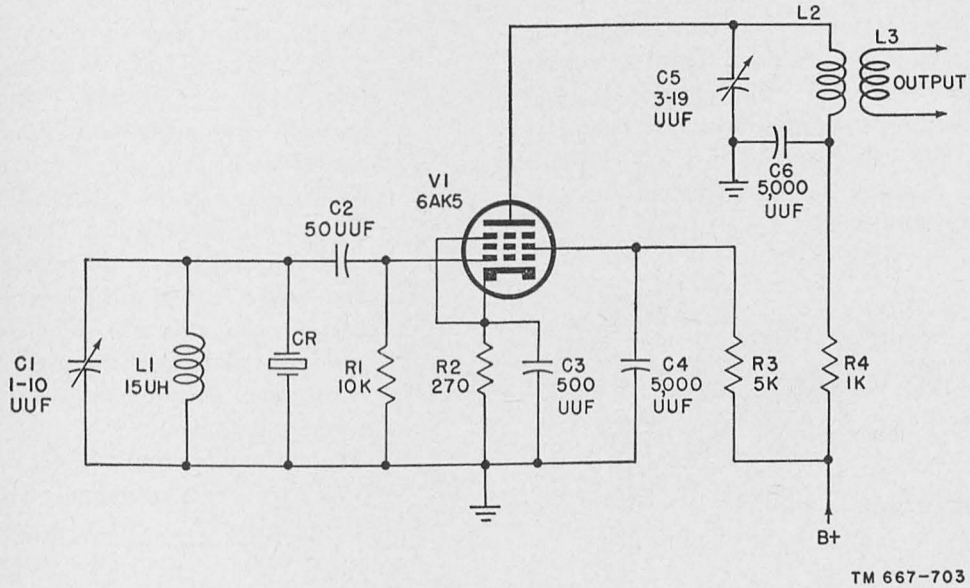

Figure 88. Overtone crystal oscillator circuit.

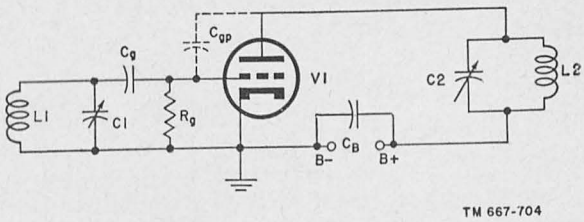

Figure 89. Tuned-plate, tuned-grid oscillator circuit, using lumped-property components.

63. Tuned-Plate, Tuned-Grid Oscillator

a. General. The basic circuit of a TPTG (tuned-plate, tuned-grid) oscillator is similar to that of a simple crystal oscillator, except that a tuned circuit is substituted for the crystal in the grid circuit. A basic single-tube TPTG oscillator circuit designed for low-frequency use is shown in figure 89. The grid- and plate-tank circuits are tuned independently and there is no magnetic coupling between the two coils L1 and L2. The feedback path is through the plate-grid capacitance of the tube. Correct operation results when the plate tank is tuned to a slightly higher frequency than the grid tank. This places the feedback signal in the proper phase for regeneration. Adjustment of either tank controls the amount of feedback. The tank that has the higher Q determines the frequency of oscillation.

b. High-Frequency TPTG. The TPTG oscillator can be used at the higher frequencies if the tank-circuit impedances are changed to the resonant line type. Figure 90 shows a schematic-pictorial representation of a TPTG oscillator using

parallel-line sections for tank circuits. This arrangement is suitable for use in the transition range of the 30- to 1,000-mc band. Since parallel-line sections are suited best to push-pull configurations and allow better performance and stability, two tubes wired in push-pull are used instead of a single tube. This increases the power output available and also effectively places the plate-grid capacitance of the two tubes in series. Because the value of interelectrode capacitance is cut in half, operation at considerably higher frequencies can be obtained with the same circuit elements. The main differences between this circuit and those used at lower frequencies are the use of plate and grid lines L_p and L_g, instead of lumped-property tanks, and the filtering provisions in the filament circuit. Adjusting the shorting bars changes the electrical length of the lines and tunes the circuit to the desired frequency. Inductances L1 and L2 are r-f chokes which are effectively open circuits to r-f, and capacitors C1, C2, C3, and C4 are r-f short circuits, thus isolating r-f currents from the filament supply.

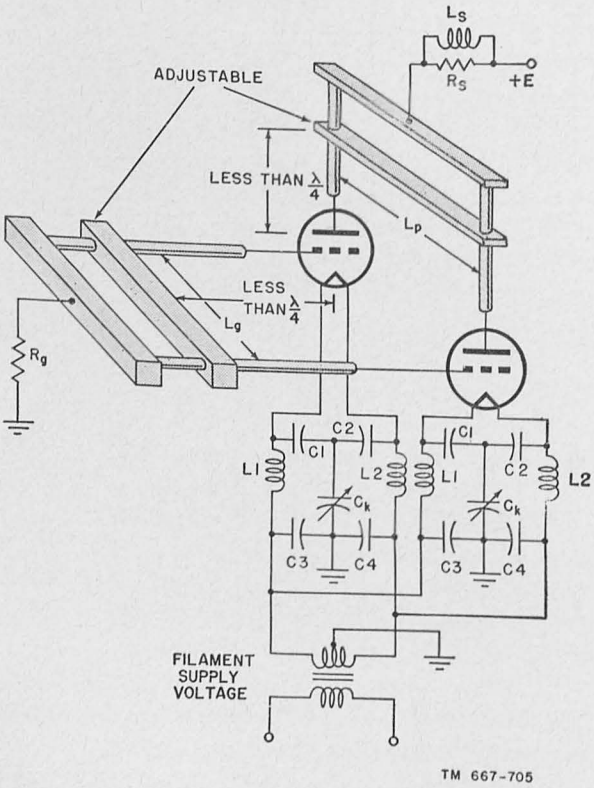

Figure 90. Tuned-plate, tuned-grid oscillator circuit using parallel-line sections.

c. Equivalent Circuits.

(1) Reference to the equivalent circuits shown in figure 91 will help in understanding the operation of the oscillator. In A, line sections L_p and L_g and inductances L_s, L1, and L2 are not shown since they are d-c short circuits. C_g represents the stray capacitance between the short-circuited end of grid line L_g and ground, and the tubes appear to be in parallel. An r-f equivalent circuit, omitting tube capacitances, is shown in B. Since a TPTG oscillator oscillates at a frequency higher than the resonant frequency to which the tank circuits are tuned, lines L_p and L_g, plus the plate and grid leads, are effectively less than one quarter-wavelength, causing them to appear as inductive reactances. Each cathode circuit consists of an adjustable capacitor, C_k, in series with the tube lead inductance. Grid resistor R_g and parasitic suppressor R_s are apparently open circuits for r-f currents, and the center points of the grid and plate inductances are shown connected to ground. The balanced-to-ground structure of the push-pull circuit maintains the center points of the lines at zero r-f potential.

(2) The cathode variable capacitors, C_k, are tuned to series resonance with the lead inductances, L_k. Since a resonant condition exists, and the cathode circuit losses are small, the cathodes are placed effectively at r-f ground potential as shown at C. Only one tube is shown, because they are identical. C_{gp} and C_{gk} are the interelectrode capacitances. The similarity of this oscillator to the low-frequency oscillator shown in figure 90 is obvious. L_{pk} and L_{gk} in C of figure 91, correspond to L_p and L_g in B. The circuit can be redrawn and further simplified, as shown in D. Since the tank circuits are inductive at the oscillating frequency, they are represented by inductive reactances X_{pk} and X_{gk}. The plate-grid feedback capacitance, C_{gp}, remains as in C. At the frequency of oscillation, the

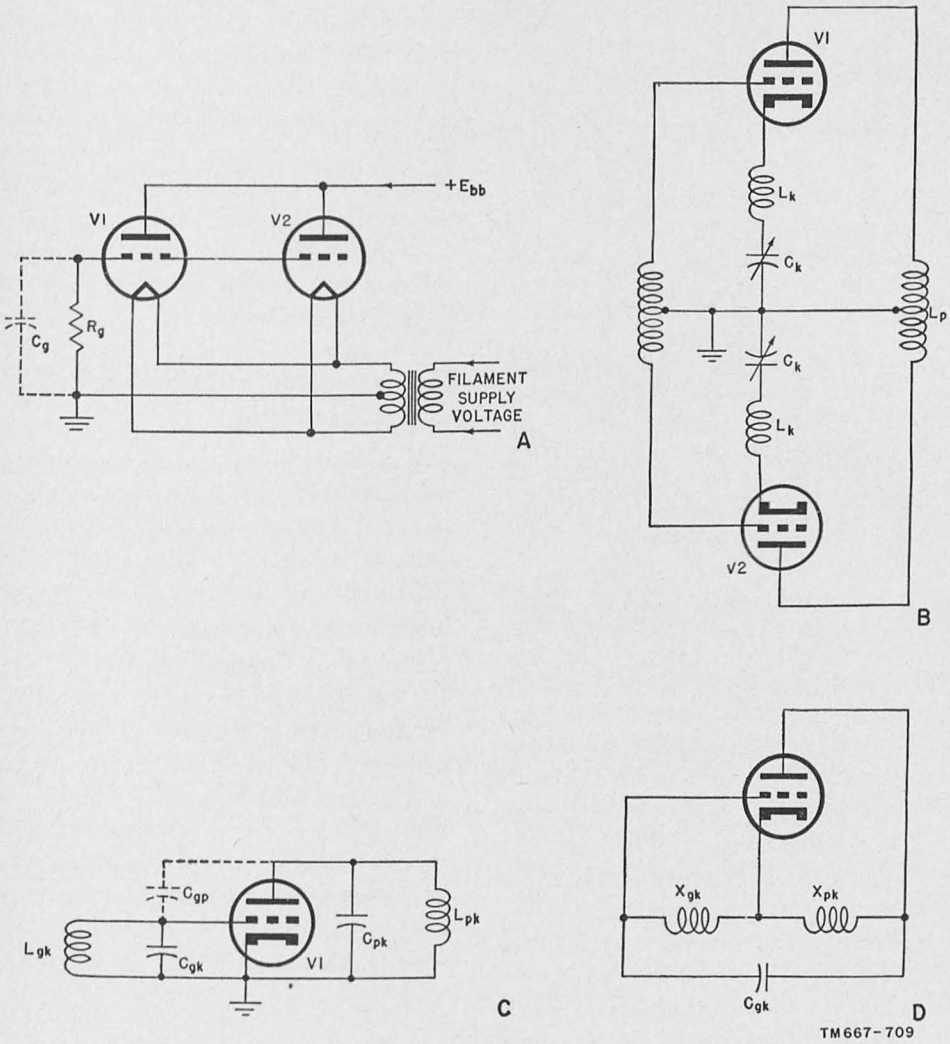

Figure 91. Tuned-plate, tuned-grid oscillator, equivalent circuits.

circuit is that of a conventional Hartley oscillator, as shown in D. Since the oscillating frequency must be lower than that of the two tank resonant frequencies; the tank tuned to the lower frequency controls the frequency of oscillation and the other affects the magnitude of the feedback voltage. The oscillator output usually is coupled to the load by means of an inductive loop, located near a low-voltage high-current point on the resonant plate line.

64. Tuned-grid, Tuned-cathode Oscillator

a. A tuned-grid, tuned-cathode oscillator using push-pull line sections is shown schematically in figure 92. The grid and cathode lines in this oscillator are tunable, and the connection between the two plates is as nearly a perfect short circuit as possible. When tubes having appreciable plate lead inductance are used, a half-wavelength line is used to connect them, giving an effective short circuit.

221643°—52——7

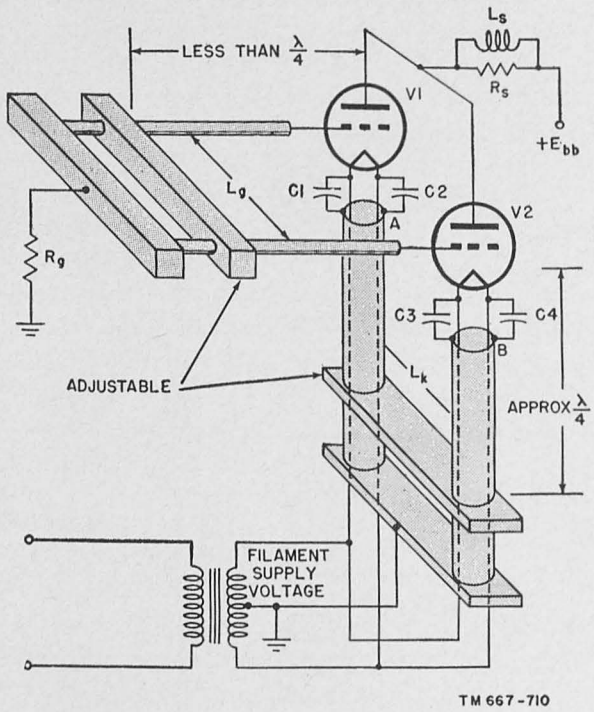

Figure 92. Tuned-grid, tuned-cathode oscillator circuit, using parallel-line sections.

b. The plate circuit in this oscillator plays no part in the oscillatory circuit, since it has been placed at r-f ground potential. The grid circuit functions like that described for the TPTG oscillator. In the cathode circuit, hollow tubular conductors form the r-f line section. These may be tuned to the oscillating frequency or slightly above or below, thereby adjusting the reactance of the circuit, and controlling the amount and phase of the feedback voltage. An r-f voltage exists between points A and B on the cathode lines; therefore, standing waves are present on the lines and r-f fields exist in the space surrounding them. Since high-frequency currents travel on the surface of conductors, however, and these are good conductors, r-f does not penetrate to the space within the hollow conductors. Thus, the filament leads which are brought to the tube through the space within the tubular conductors are not affected by r-f currents. This shielding effect is so efficient that the relatively complex filter network used in the TPTG circuit is unnecessary. Capacitors C_1, C_2, C_3, and C_4 are simple r-f bypass capacitors.

c. Broken down to its simplest form, this circuit is the equivalent of a conventional Colpitts oscillator. Adjustment of the grid shorting bar controls the frequency of oscillation, and it always must be adjusted to less than one quarter-wavelength. Adjustment of the cathode shorting bar controls the amount of feedback voltage, and, consequently, the output of the oscillator. There is a small amount of interaction between the controls. One advantage of this circuit is that these are the only two adjustments required. Since only d-c voltage exists between plate and ground, and only r-f voltages exist between cathode and ground, the peak voltage between any point in the oscillator circuit and ground is reduced to a minimum. The cathode is at ground potential for d-c, and output connections to the load may be made directly by taps on the cathode line.

65. Tuned-plate, Tuned-grid, Tuned-cathode Oscillator

A circuit combining the essential arrangements of the TPTG and tuned grid, tuned cathode oscillators is called a tuned-plate, tuned-grid, tuned-cathode oscillator. Depending on the relative adjustments of the three lines, this circuit can be made to simulate either the TPTG of the tuned-grid, tuned-cathode oscillator. Generally, the frequency depends on the *sum* of the lengths of the plate and grid lines; the feedback voltage depends on the *ratio* of the plate- and grid-line lengths, as well as on the length of the cathode line *relative* to a quarter-wavelength. Since there are three variables in this arrangement, and only frequency and the amount of feedback voltage to be controlled, numerous combinations of line length are available, all of which will give the same frequency and efficiency.

66. Lighthouse Tube Oscillator

a. The lighthouse type tube, 2C43, serves as an efficient oscillator at frequencies up to 1,000 mc. It is particularly adapted for use in a coaxial-line circuit configuration, in which it becomes an integral part of the physical circuit shown in figure 93.

b. The oscillator assembly consists of three coaxial cylindrical conductors. The inner conductor makes contact with the plate, the next with the grid, and the outer one with the shell, or cathode of the tube. The cathode connection is external for d-c, and through the capacitance between the cathode and outer conductor for r-f. The space between the cathode and grid conductors forms the cathode line which is tuned by an

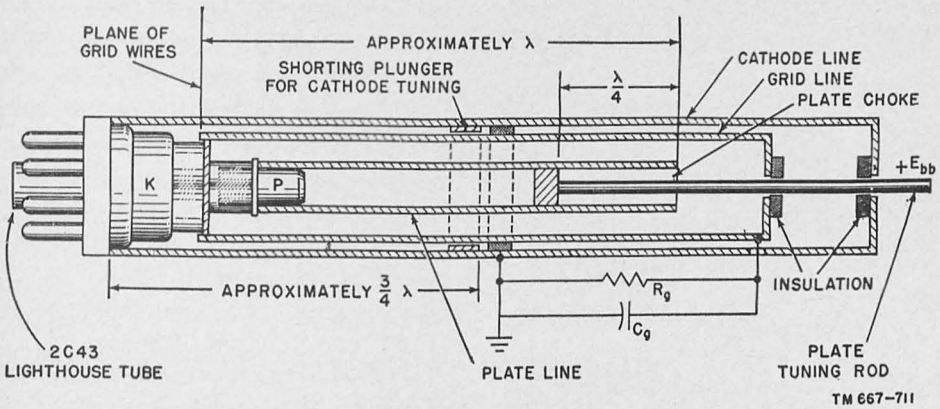

Figure 93. Coaxial-line oscillator circuit, using lighthouse tube.

adjustable shorting plunger. The plunger does not actually touch the grid conductor, but sufficient capacitance exists to provide an r-f short circuit. The d-c grid-cathode path is through R_g. The grid and plate conductors form the plate line which is open-circuited at the end away from the tube. An open-circuited plate line is used because of the high d-c voltage between the grid and plate lines. A re-entrant quarter-wave line, called a quarter-wave choke, is built into the end of the plate conductor to isolate r-f currents in the plate circuit from the power supply. This choke can be adjusted with a plate-tuning rod. The construction of the tube is such that the lead inductances and tube capacitances form part of the tuning circuits.

c. Because of the arrangement of tuning circuits, this oscillator can be called a tuned-plate, tuned-cathode oscillator, which is a grid-isolation type of circuitry. Its equivalent is similar to the Colpitts circuit. The cathode circuit must present a capacitive reactance, and is, therefore, tuned to a frequency lower than the oscillating frequency. The plate circuit must be inductive, and is tuned to a *higher* frequency than the frequency of oscillation. Consequently, the circuit oscillates at a frequency somewhere between the resonant frequencies of the cathode and plate tanks. The tuning of the plate line controls the frequency, and the tuning of the cathode line controls the amount of feedback, and the output. Correct tuning is indicated by maximum output. The completely shielded construction insures that no lines other than the plate- and cathode-tuning lines are potentially available to support parasitic oscillations. The only possibilities for wrong oscillating frequencies are those for which the lines are multiples of a quarter-wavelength. For example, with oscillations occurring at one-third the desired frequency, the cathode line would appear as approximately one quarter-wavelength. At this frequency, the plate line would act no longer as a $\lambda/4$ choke, but when measured from the short circuit within the plate conductor around the open end and back to the tube, it would act approximately as a 5 $\lambda/12$ choke. This length is sufficiently close to one half-wavelength that its reactance would be extremely low, and oscillations at that frequency would be impossible.

67. Ring Oscillator

a. General. The power output of a two-tube push-pull oscillator is limited by the maximum allowable current-carrying capacity of the tubes used. The size of tubes in vhf and uhf oscillators is relatively small, to avoid excessive transit time and interelectrode capacitance. These considerations result in small available power outputs, particularly at frequencies in the upper portion of the 30- to 1,000-mc range. Although the logical solution to the problem is to increase the number of tubes, adding tubes in parallel increases the effect of the interelectrode capacitances. A ring oscillator (fig. 94) can be constructed by connecting several push-pull units in such a manner that they operate as one circuit. Since push-pull arrangements are used, the tubes always are added in pairs, and the interelectrode capacitors are not as great. To shorten leads, the tubes usually are arranged about the circumference of a circle. The circuits of the individual push-pull units which makeup the oscillator are the same as those already described. There is no theoretical maximum, but the principles of operation are the same regardless of the number of tubes.

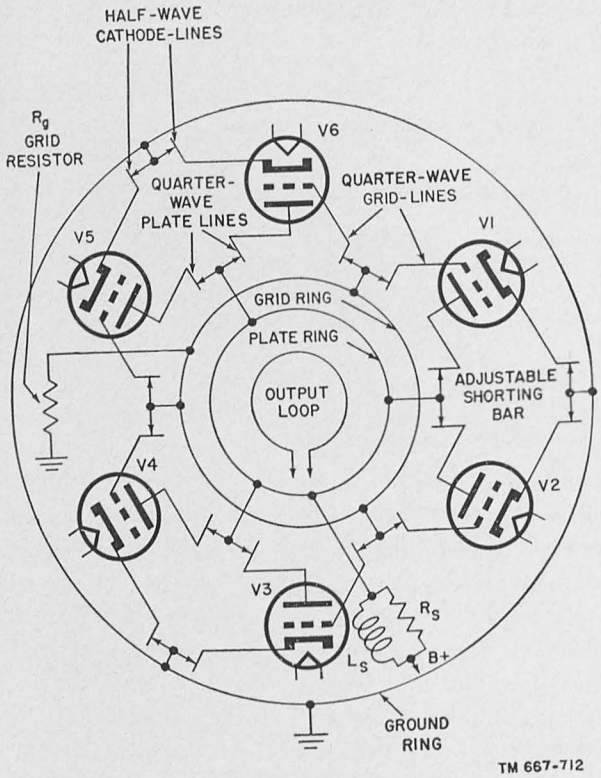

Figure 94. Ring oscillator circuit, using six tubes.

b. Operating Principles.

(1) The schematic in figure 94 shows that the six tubes are effectively connected in series. Since the interelectrode capacitances also are in series, the total capacitance is reduced. This advantage is somewhat nullified because the lead inductances are in series, and the total inductance is increased. The operation of each pair of tubes in this circuit is comparable to the tuned-plate, tuned-grid oscillator of figure 90. The outer ring is grounded and the cathodes are connected to this ring through half-wave resonant lines, placing the cathodes effectively at r-f ground potential. The plates and grids are connected to the inner and second rings, respectively, through quarter-wave tuned lines. The grid load, plate load, and parasitic suppression are furnished by circuits common to all tubes. Since the tubes are in push-pull, the instantaneous conditions in adjacent tubes are always of opposite phase. For example, assume that the grid signal of V_1 is a positive maximum at a given instant. At the same instant, the plate signal of V_1 will be at a negative maximum. The plate of V_2, approximately one half-wavelength away, is positive because of the standing wave of voltage on the tuned transmission line. The signal on the grid of V_2 is produced by the interelectrode capacitance and is a negative maximum. Continuing around the ring in this manner, the electrode voltages of alternate tubes are in phase, and those of adjacent tubes are 180° out of phase.

(2) The arrangement of tubes around a circle with the plate lines connected at the center allows the output to be taken off by means of an inductive coupling loop placed close to the plate ring. One of the disadvantages of the ring oscillator is the number of adjustments that must be made. If they are not made properly, inefficient operation will result, or, in extreme cases, the circuit will not oscillate at all. Because of the symmetrical mechanical arrangement of the circuit elements, it is possible to gang together similar adjustments, and reduce the controls to a relatively small number, simplifying operation.

68. Butterfly Oscillator

The butterfly tuner is particularly useful in applications where it is necessary to tune the circuits through a wide band of frequencies. They are used commonly in the vhf and uhf receiver local oscillators where power requirements are low. A pictorial diagram of a butterfly tuner used in a receiver local oscillator circuit is shown in figure 95. This oscillator is used in one of several interchangeable tuners covering different frequency ranges. This receiver monitors enemy radar signals and, since the frequency of these signals is unknown, the receiver must be tunable over a wide range of frequencies, with a minimum number of different tuners. The butterfly capacitor is well adapted to this type of service, and this particular circuit covers frequencies from 100 to 500 mc. The butterfly unit is about 4½ inches in diameter. The 10 silver-plated brass stator plates and 9 silver-plated brass rotor plates are shaped to provide a semilogarithmic frequency variation with rotation, and a relatively high resonant impedance at the lower frequencies. The oscillator tube, a 955 acorn triode, is mounted directly on top of the

unit. Its plate and grid leads are connected to the butterfly by means of low-inductance arms. Figure 96 shows the schematic diagram of the oscillator. Capacitor C1 and resistor R1 serve to isolate the plate supply; Z1 is the butterfly tuner, which is connected between the grid and plate of the tube. Energy is coupled to the grid circuit through capacitor C2, and resistor R2 is the grid load. The plate-grid capacitance of the tube C_{gp} serves as the feedback path. To reduce the resonance effects of cathode lead inductance, which would cause serious dips in the frequency curve of the oscillator, the cathode and heater leads are isolated from ground by means of damping resistors R3 and R4. These are shunted by r-f chokes L1 and L2, which are wound around the tubular resistors, and furnish a low-resistance path for the heater current. Capacitor C3 bypasses r-f currents to ground on the high side of the heater circuit. The output is coupled inductively by a pick-up loop, as shown in figure 95, and fed to the i-f amplifier, together with the r-f signal which is inserted through the untuned crystal mixer.

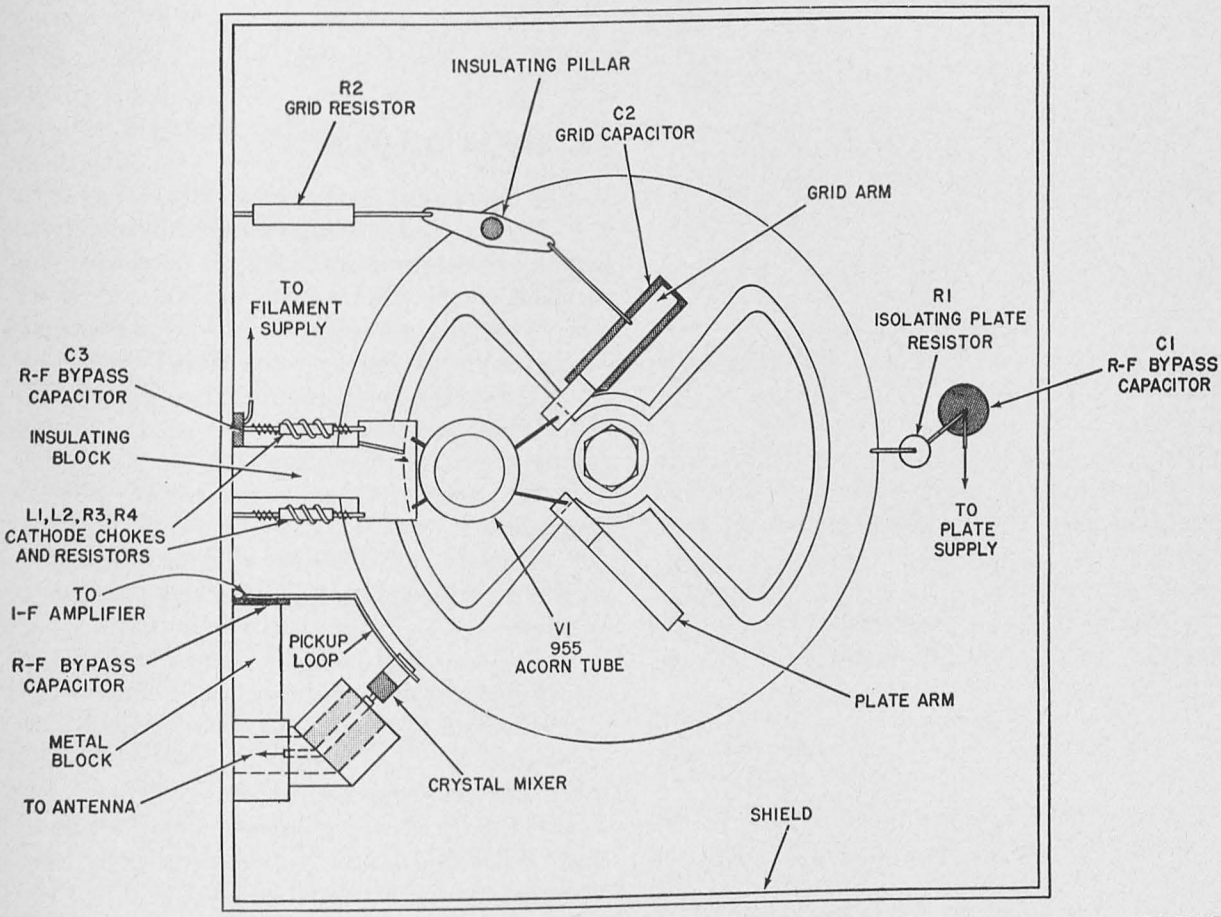

Figure 95. Construction of 100- to 500-mc butterfly oscillator assembly.

69. Summary

a. Oscillators in the 30- to 1,000-mc band are used to generate r-f energy for transmitters and as local oscillators in superheterodyne receivers.

b. Special circuits and components are required in this frequency range for good percentage stability of operating frequency.

c. In harmonic oscillators, the grid circuit, which usually is crystal-controlled, resonates at a fundamental frequency; the plate circuit is tuned to some harmonic of the fundamental frequency.

d. An overtone crystal oscillator generally is characterized by the use of a specially cut crystal which vibrates at some overtone of its fundamental frequency. The overtone is related to, but not equal to, some odd harmonic of the fundamental.

e. This overtone is the lowest frequency present in the circuit, simplifying construction as well as

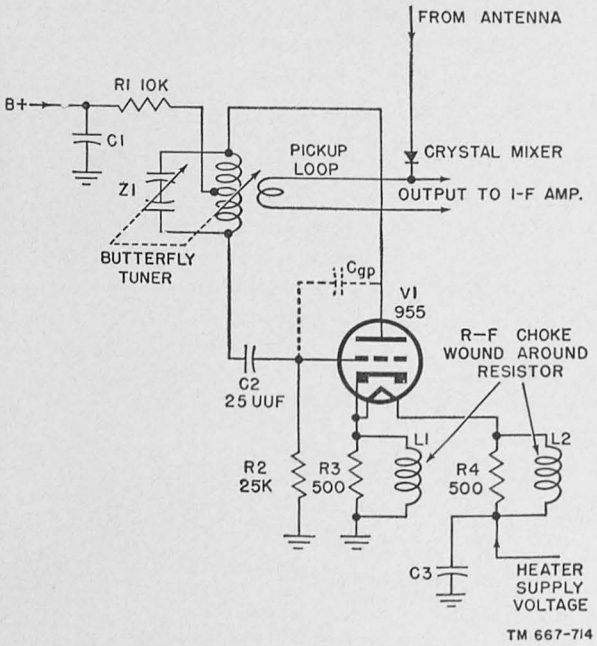

Figure 96. Butterfly local oscillator 100- to 500-mc schematic diagram.

the problem of spurious oscillations. The plate circuit of an overtone oscillator is tuned to the same frequency as the grid current.

f. In a tuned-plate, tuned-grid oscillator, there are separate tank circuits for grid and plate, and there is no magnetic coupling between the tank circuits.

g. As the operating frequency is increased, the lumped-property tank components of the TPTG oscillator are replaced by parallel-tuned resonant-line sections.

h. At the operating frequency, a TPTG oscillator circuit is the equivalent of a Hartley oscillator.

i. A tuned-grid, tuned-cathode oscillator breaks down into the equivalent of a Colpitts oscillator circuit.

j. The essential features of the TPTG oscillators sometimes are combined in a tuned-plate, tuned-grid, tuned-cathode arrangement, giving advantages of increased flexibility.

k. At frequencies above 300 mc, a lighthouse tube often is used as an oscillator in a resonant coaxial-line configuration.

l. When r-f energy is required at high power levels, several push-pull parallel-line oscillators may be arranged about a circle to form a ring oscillator.

m. For low-power receiver local oscillators which must be tunable over a wide frequency range, the butterfly oscillator produces good results.

70. Review Questions

a. What does an oscillator circuit consist of?

b. What is meant by percentage stability?

c. What determines the upper frequency limit at which a tube will oscillate?

d. What is the difference between a harmonic oscillator and an overtone oscillator?

e. How do frequency multipliers operate?

f. What are the advantages of an overtone oscillator?

g. Why are TPTG oscillators used at the higher frequencies?

h. Explain the operation of a tuned-plate, tuned-cathode oscillator circuit using parallel-line sections.

i. Explain the operation of a tuned-plate, tuned-grid, tuned-cathode oscillator circuit.

j. How is a lighthouse oscillator assembly constructed?

k. What is a ring oscillator?

l. What are the advantages of a ring oscillator?

m. What is a butterfly tuner and how does it operate?

CHAPTER 8

COUPLING PRINCIPLES AND CIRCUITS

71. Differences from Lower Frequency Practices

It often is necessary to transfer r-f energy from one circuit to another, and this transfer of energy is called *coupling*. Almost any element in a signal circuit of a receiver or a transmitter acts to couple energy from one point in the circuit to another, often while serving another purpose. For example, an i-f transformer serves as the coupling device between the plate circuit of one tube and the grid circuit of the next, and also provides control of bandwidth as well as a path for the d-c voltage. The principles on which coupling depends are the same at all frequencies, but the shorter wavelengths make different physical configurations necessary for coupling devices in this range. Where electrostatic coupling is not wanted, it is necessary either to shield the inductive coupling loop with a Faraday screen, or to mount it in such a position that coupling is at a minimum. This is true also at lower frequencies, but to a much lesser extent, because of the smaller proportion of capacitive coupling to inductive coupling. The low-frequency tank-circuit inductance shown in figure 97 is designed to operate at about 7 mc. The coil in the center inductively couples the larger coils to another circuit. The coupling coil is large at the low frequencies, but as the frequency is increased, adequate inductive coupling can be obtained with a relatively small inductor. Thus, at 30 mc or above, it is common to use only a single-turn link for coupling to the tank circuit. This is shown in the lumped-property component tank circuit (fig. 80) for use at about 70 mc.

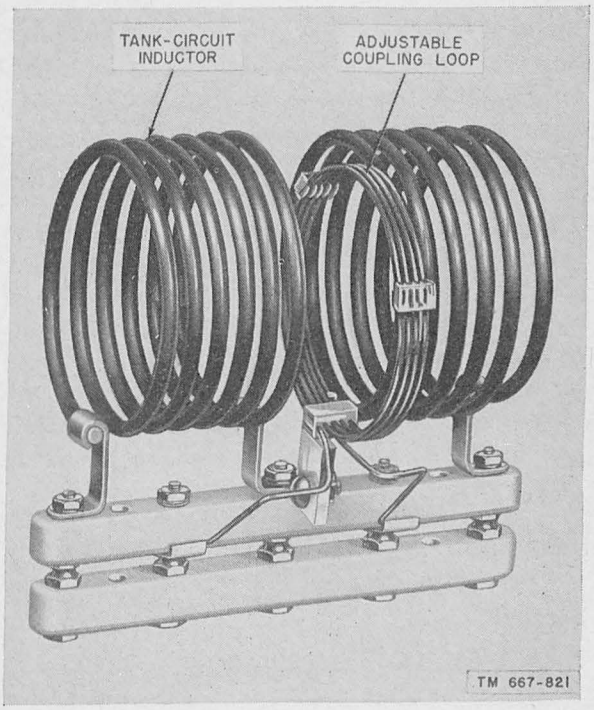

Figure 97. Low-frequency tank-circuit inductance.

72. Added Functions

In addition to their primary function of providing a controllable means of coupling energy from one circuit to another, coupling devices in practical equipment often are designed to perform certain other functions. Isolation of circuits for direct current is one of the most common functions of a coupling circuit, because this is necessary between most stages of transmitters and receivers. Obviously the plate voltage of a stage must be kept off the grid of the following stage in grounded-cathode amplifier circuits. This is equally important at low or high frequencies, and can be done easily by using inductive or capacitive coupling for the signal frequency, with no d-c connection. A change of impedance in the signal circuit permits effective transfer of energy from the relatively high impedance of a vacuum-tube output circuit to the relatively low impedance of a load such as an antenna. Couplings of this sort permit a considerable range of impedances to be matched by adjusting the degree of coupling and

can be used to provide a fixed ratio of impedance between coupled circuits. Coupling also is used to match a balanced-to-ground circuit to another circuit in which one side is at or near ground potential. This can be accomplished at low frequencies rather easily, but at higher frequencies it is more difficult because of the unbalancing effect of a relatively small difference in circuit capacitances.

73. Practical Coupling Devices

The requirements of a given piece of equipment may make necessary a special circuit or device for coupling, but the *principles* involved in the transfer of energy remain the same. Careful consideration of the particular coupling device concerned usually will make the operation clear. These principles are the same at all frequencies and depend on conductive, inductive, or capacitive effects. The *degree* of coupling is adjustable in many coupling devices, usually by a simple mechanical motion of the pick-up device, which may be an inductive loop or a capacitive probe. An adjustment of this kind may be used to control the loading of a transmitter, and the amount of energy delivered to the load circuit.

74. Inductive Coupling Methods

Many coupling devices depend on mutual induction between the circuit from which the energy is to be taken and the coupling device. The pick-up loop is mounted near the point where the largest current flows, and energy is taken from the circuit. The flux density of the r-f magnetic fields is greatest there, and a given degree of coupling can be obtained with a smaller coupling loop, and usually with less detuning. It is relatively easy to couple energy from a high-impedance circuit to a low-impedance load by inductive methods. This system is used in practical equipment, particularly where considerable power is to be transferred, such as coupling from the final amplifier of a transmitter to a transmission line.

a. Tuned-Link Coupling. In the part of the 30- to 1,000-mc band in which lumped-property components are practical, the inductively coupled tuned-link arrangement is used frequently. The transfer of energy from the tank-circuit coil to the tuned link is accomplished almost entirely through the mutual inductance between them. In circuits in which it is essential that capacitive coupling be reduced, the single-turn link may be inclosed in a Faraday screen. This almost eliminates capacitive coupling, but has practically no effect on inductive coupling. Control of capacitive coupling is usually necessary only where radiation of harmonics of the signal frequency must be reduced to the lowest possible value. The amount of coupling is greatest at resonance, because the capacitive reactance equals and cancels the inductive reactance and maximum current flows. Such a link coupling provides a good match from the tank circuit to a coaxial transmission line, and is mechanically and electrically rugged and easy to adjust. It also isolates the d-c plate voltage of the amplifier from the output circuit. The frequency range over which it can operate correctly is limited by the tuning range of the tank circuit. In equipment in which the tank coil can be changed to provide another tank-tuning range, the link also can be changed to match. When an untuned link coupling to the center of an amplifier tank circuit is used, the coupling is varied by moving the link in or out of mesh with the tank coil. The series-tuned link usually is easier to adjust, and will operate well over a greater range of frequencies.

b. Tuned-Link Coupling to Linear Tank Circuit. Figure 98 shows a series-tuned link coupling used with a tank circuit made of a section of transmission line. It is electrically similar to the series-tuned link coupling made of lumped-property components; however, the method of tuning the link to resonance differs. The length of the section of coaxial transmission line at the ground end of the link is adjusted until the capacitive reactance is equal to the inductive reactance of the link. The tuning is done by moving the internal shorting ring of the series-tuning stub in or out as required to resonate the link at the operating frequency. The spacing between the U-shaped link and the tank circuit is fixed, and the loading adjustment is made by adjusting the series tuning of the link. The efficiency, mechanical and electrical ruggedness, and stability are the same as those of the lumped-property circuit. This distributed-property type of coupling device is well suited to coupling in practical equipment using parallel-conductor line-section circuit elements. Equipment of this sort is used commonly in the frequency range between about 100 and 500 mc.

c. Adjustable Link for Coaxial-Tank Circuit. In coaxial-line tank (fig. 99) circuits used for the upper part of the 400- to 1,000-mc range, series-

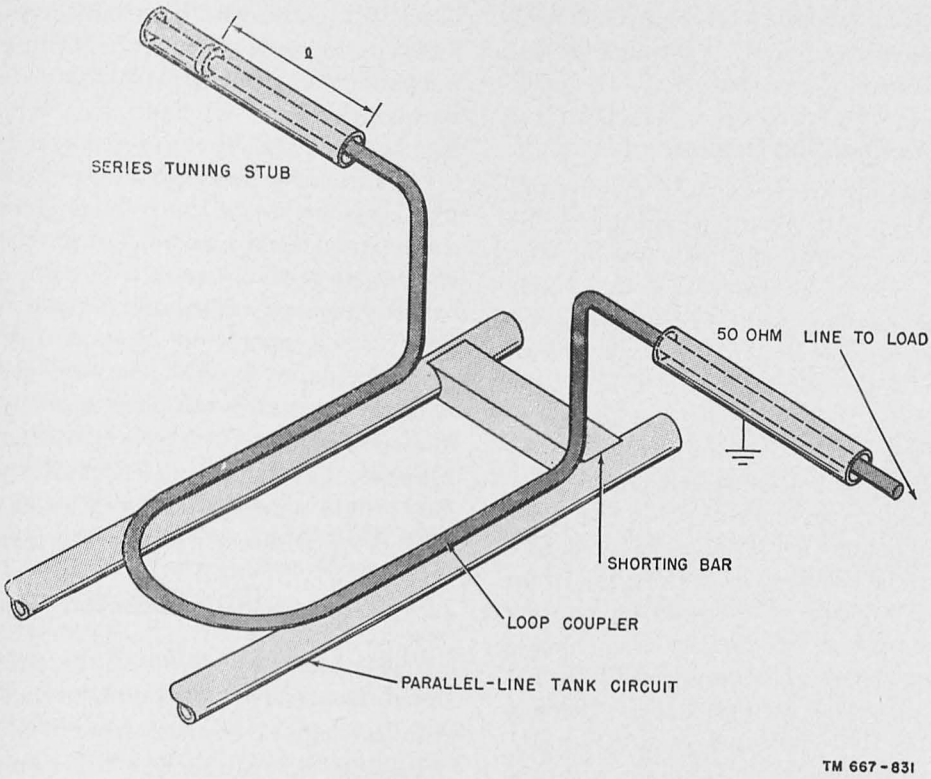

Figure 98. Series-tuned linear tank link coupling.

tuning arrangements may be difficult to design, because of the mechanical configuration of the circuit elements. Adjustable link couplings in the plate and grid circuits of a coaxial amplifier stage are shown in figure 99. The coupling link consists of a half-turn loop mounted on the inside end of the coaxial-line connection fitting mounted in the tuning ring of the coaxial-tank circuit. The coupling loop remains near the high-current, low-voltage region of the coaxial tank, regardless of how the tuning ring is moved in normal tuning. Adjustment of the amount of coupling, therefore, must be made by some other method than changing the spacing, or tuning to resonance. This is accomplished by turning the loop about the axis of the center conductor of the coaxial connecting fitting. Since the strongest part of the r-f magnetic field in the coaxial tank exists as lines of force surrounding the central rod or tubing conductor, turning the plane of the coupling loop perpendicular to the radius of the tank reduces the inductive coupling to a minimum. In that position, both sides of the loop are at the same distance from the central conductor, and have equal and opposite induced voltages, which cancel.

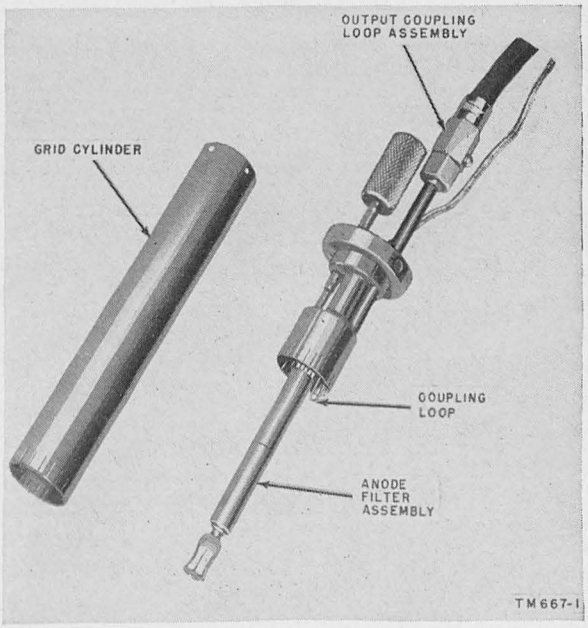

Figure 99. Link coupling in a coaxial-line circuit.

When the plane of the coupling loop is rotated to a position parallel to the radius of the tank circuit, one side of the loop is nearer the central conductor of the tank by the width of the loop. The

voltages in opposite sides of the loop no longer balance, and current can flow out through the coaxial line to the load.

75. Capacitive Coupling Devices

Where the load circuit to which it is desired to couple energy is a relatively high impedance, the use of capacitive coupling (fig. 100) is more convenient than inductive methods. The adjustable capacitance tab (probe) is actually a small metal plate which acts as one plate of a capacitor, with the center conductor of the tank acting as the other plate. Since the nonshorted end of such a quarter-wave line section is a high-voltage, low-current point, energy can be transferred readily through the small capacitance between the probe and the central conductor. Obviously the degree of coupling can be adjusted by moving the probe in or out, which increases or decreases the coupling capacity. This change of capacity also changes the resonant frequency of the tank circuit, so that it is necessary to retune it to resonance when any major change in the coupling capacitor is made. In general, a large change in coupling with *any* system, inductive or capacitive, will cause some change in the tank-circuit tuning, but, with inductive methods, this detuning effect is smaller for a given change of coupling. Capacitive coupling is effective over a relatively wide frequency range, once it has been adjusted to the proper value, and does not require frequent readjustment when the tank-circuit tuning is changed. This is true because the coupling circuit is not resonant. Because the load is shunted effectively across the high-impedance end of the tank circuit, such capacitive coupling systems are not suited for coupling to low-impedance circuits, unless the degree of coupling is kept very small. For example, if a 50-ohm coaxial line connected to a 50-ohm load were connected to the probe in place of the grid of the following stage, which is a relatively high-impedance load, the tube in the coaxial stage would see the 50-ohm load shunted across the high impedance of the coaxial tank. For efficient operation, vacuum tubes require a load impedance at least comparable to their own internal impedance, which is usually several thousand ohms, unless the tube is operating as a cathode follower. The shunting effect of such a 50-ohm load would ruin the efficiency of the stage, if it were coupled directly across the coaxial tank.

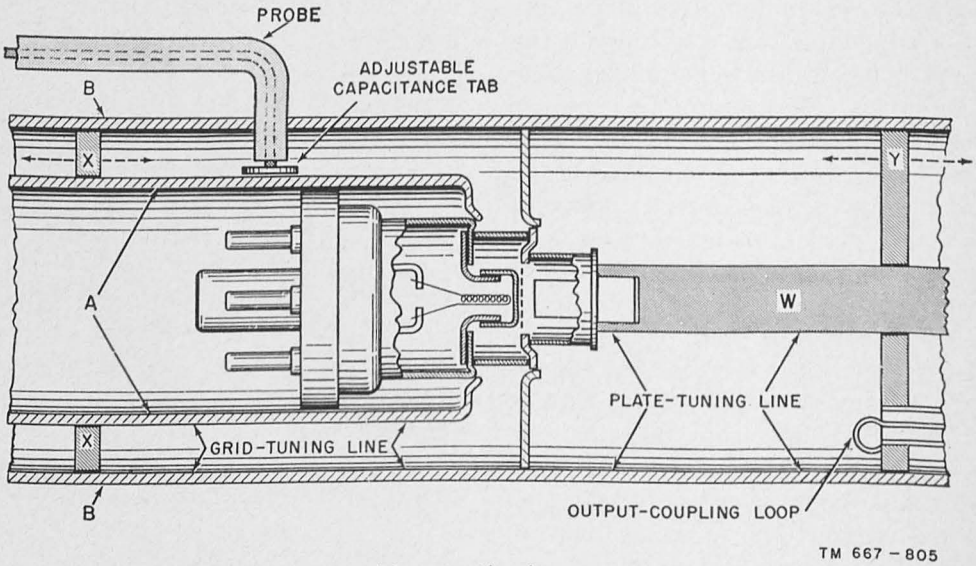

Figure 100. Capacitive coupling in a coaxial-tank circuit.

76. Balanced-to-Unbalanced Coupling

When a circuit balanced to ground for the signal frequency is to be connected to a circuit with one side at or near ground r-f potential, it is possible to combine this function with that of coupling. This can be done with either inductive or capacitive couplings, but when an impedance step-down is needed also, inductive coupling is much more practical.

a. The coupling method described in paragraph 74*a* is designed to transfer the r-f output from a push-pull amplifier tank circuit to a low-impedance coaxial line, in which the outer conductor is at ground r-f potential. A single-turn cou-

pling loop is coupled inductively to the electrical center of the tank coil, which is at ground potential for the signal frequency. The capacitive coupling between the loop and the tank inductor is small, because of the small surface area of the loop, and the separation between it and the tank coil. Because of these two facts, very little unbalance is caused by the coupling loop. The change from high to low impedance is accomplished by the step-down transformation ratio between the tank coil and the coupling loop.

b. At frequencies up to 500 mc, where parallel-conductor line sections are used commonly as circuit elements, a series-tuned loop with one side at ground potential is considerably less effective for such balanced-to-unbalanced coupling service, because the loop area is larger in proportion to the frequency, and the capacitive coupling is larger, often being equal to the inductive coupling. Since the *capacitive* coupling of a loop with one side grounded will be greatest in the ungrounded side, the loading of the linear tank will not be symmetrical, and the circuit will be unbalanced. This causes radiation losses from the tank, and forces the load current to divide unevenly between the two tubes in push-pull stages. The difficulty can be eliminated by using a coupling loop combined with a balun, as shown in figure 101. The coupling loop is constructed of tubing similar to that used in the linear tank. The balun shorting bar is adjusted to make the length between it and the ends of the tubes forming the loop an electrical quarter-wavelength at the operating frequency. When this is done, the ends of the tubes are both at the same r-f potential in respect to ground, and the center of the loop mounting support can be grounded. Although this coupling system is mechanically more complex than a simple loop, it has important advantages when used with parallel-conductor line-section tank circuits. The electrical symmetry is so good that it does not produce a serious unbalance with push-pull tanks, and it is less critical to adjust than a series-tuned loop. It is also usable over a wider frequency range with a given adjustment. The adjustment of the amount of coupling in such a system is made by varying the spacing between the coupling loop and the tank, which adds somewhat to the mechanical complexity of the arrangement.

77. Summary

a. The transfer of energy from one circuit to another is called coupling.

b. The principles on which coupling depends are the same at all frequencies, but the shorter wavelengths make different physical configurations necessary for coupling devices.

c. Adequate inductive coupling can be obtained with a relatively small inductor at the higher frequencies.

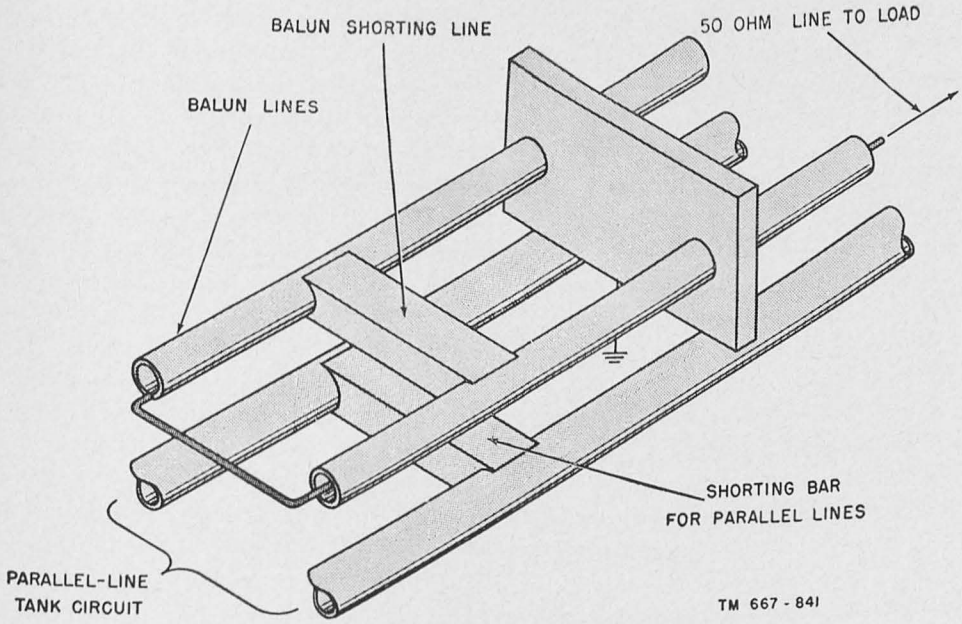

Figure 101. Balun coupling loop.

d. Isolation of circuits for direct current is necessary between most stages of transmitters and receivers. This can be accomplished by either inductive or capacitive coupling.

e. Coupling devices can be used to permit effective transfer of energy from the relatively high impedance of a vacuum-tube output circuit to the relatively low impedance of a load such as an antenna.

f. Many coupling devices depend on mutual induction between the circuit from which the energy is to be taken and the coupling device.

g. Faraday shields can be used to reduce capacitive coupling in a link-coupled device. They have practically no effect on inductive coupling.

h. The series-tuned link is easy to adjust, and operates well over a wide range of frequencies.

i. The distributed-property type of coupling device is well suited to coupling in practical equipment using parallel-conductor line-section circuit elements.

j. Where the load circuit to which it is desired to couple energy is a relatively high impedance, the use of a capacitive coupling is more convenient than inductive methods.

k. A large change of coupling with any system, inductive or capacitive, will cause some change in tuning but, with inductive methods, this detuning effect is smaller for a given change of coupling.

78. Review Questions

a. For what purposes are coupling devices used?

b. How can the degree of coupling be adjusted in capacitively coupled circuits? In inductive circuits?

c. Why is the pick-up loop in an inductively coupled circuit mounted near the point of maximum current flow?

d. Why is control of capacitive coupling usually necessary in an inductive circuit?

e. How is coupling achieved in a coaxial-tank circuit?

f. Where does the strongest part of the r-f magnetic field exist in a coaxial tank?

g. How can capacitive coupling be accomplished in a quarter-wave line section?

h. How can balanced-to-unbalanced coupling be accomplished?

i. What will be the effect of nonsymmetrical loading on a linear tank circuit?

CHAPTER 9

PROPAGATION AND ANTENNAS

79. Introduction

a. Field Relationships. To make efficient use of radio equipment in the frequency range from 30 to 1,000 mc, it is necessary to understand the natural phenomena that influence the propagation of radio waves at these frequencies. The effects of the atmosphere and the surface of the earth on frequencies above approximately 30 mc vary with climate, terrain, geographical location, frequency, and other conditions. In any radio wave, the electric and magnetic fields are at exactly a 90° angle to each other, and both are also at a 90° angle to the direction of wave motion. This basic physical relationship in space is shown in figure 102. A train of radio waves is illustrated moving from left to right across the field of view of the observer. If all points of identical phase in a selected wave could be made visible at a given instant, they would be seen to form a surface curved on a radius centered on the antenna. When the antenna is at a considerable distance from the observing point, and the portion of such a surface of identical phase considered is small in relation to the distance to the antenna, the curvature of the surface may be neglected for practical purposes. This means that a given small area of such an equiphase surface can be represented as a plane surface.

b. Radio-wave Representation. A single complete wave occupies the space between A and A_1, and several equiphase planes within the wave are shown. Solid vertical lines represent the lines of force in the electrical field, and dotted horizontal lines are used for the force lines in the magnetic field. In each equiphase plane, the weight of the lines indicates the intensity of the electric field in that plane. Thus, in planes B, D, and B_1, the field has its greatest intensity, and in planes A, C, and A_1, the field strength is zero. This is shown also by the background shading, which is heaviest in the planes of greatest instantaneous field strength, and on the graph of field intensity above the pictorial view. Only a small area of each equiphase plane in the advancing wave is shown filled in with force lines. This is necessary to prevent confusion, but the lines should be imagined as extending to considerable distances, both vertically and horizontally.

c. Polarization. A radio wave is considered to be polarized in the plane of the electric field lines. The choice of vertical or horizontal polarization is governed by such factors as the extent and direction of the area it is desired to cover from a given transmitting antenna. For example, if it is desirable to radiate the waves in all horizontal directions from the transmitting point, a simple half-wave dipole mounted with its axis vertical is often chosen. Such a vertically polarized antenna radiates equally well in all horizontal directions. It also radiates upward sufficiently to communicate satisfactorily with aircraft, excepting for a small area directly above the antenna. In actual radio communication, the plane of polarization of the received radio wave at any given point may differ somewhat from that at the transmitting antenna. This is because of the effects of reflection from the ground and surfaces such as water tanks and buildings. It also is possible to radiate elliptically polarized radio waves from special antennas. In such waves, the plane of polarization rotates as the wave advances. At present, such waves are used almost entirely in experimental work.

80. Propagation of Direct, Sky, and Ground Waves

a. General. In considering propagation in the 30- to 1,000-mc band, only the direct-wave mode of propagation is effective at all times. The direct wave is defined as that part of the radiated energy that travels directly from the transmitting antenna to the receiving antenna, without being re-

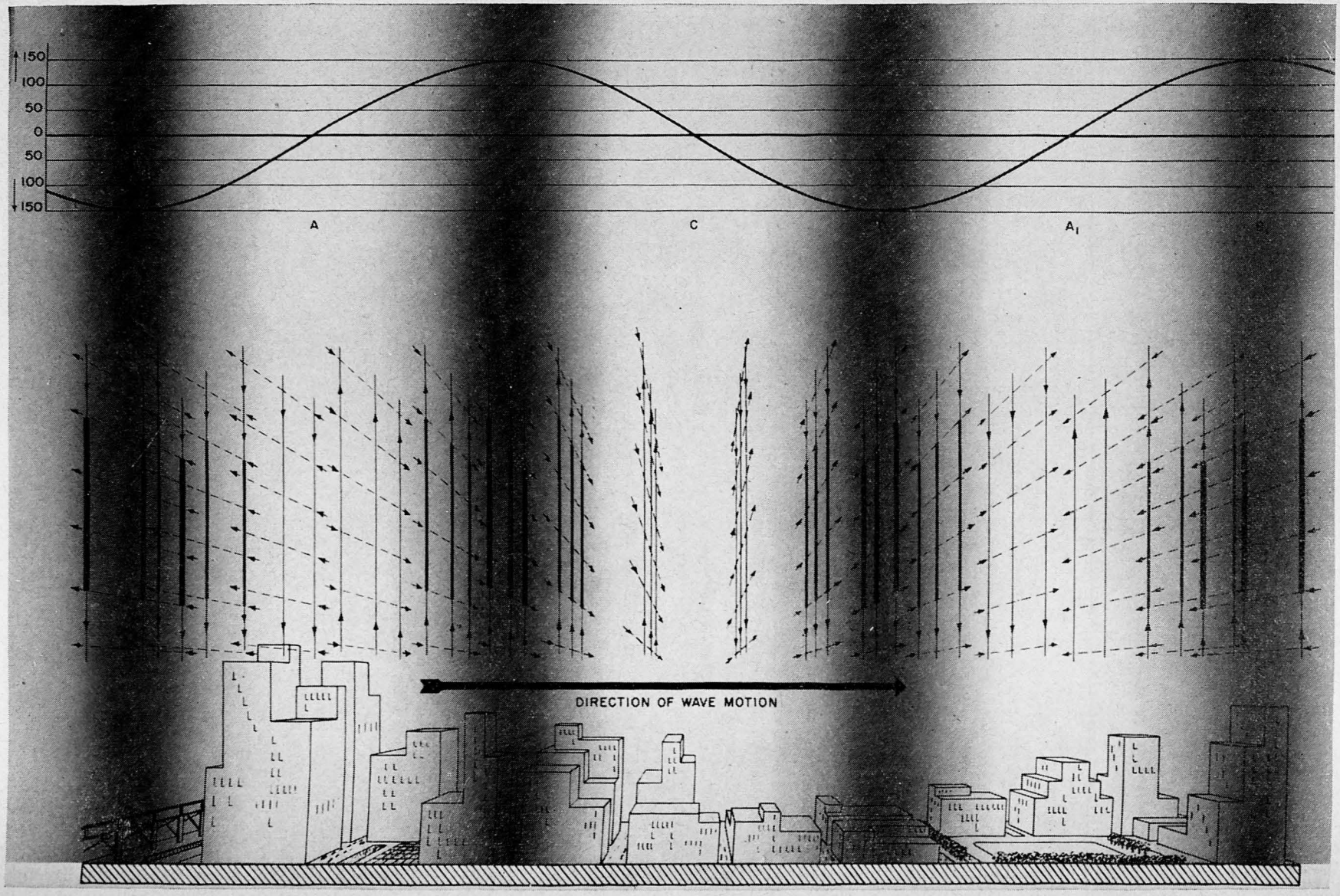

Figure 102. Electric and magnetic field lines in vertically polarized radio wave.

turned from the ionosphere above or reflected from the surface of the earth or objects on or above it. Sky propagation and ground-wave propagation, which account for the long distances covered by radio waves on lower frequencies, become less effective as the frequency is raised above 30 mc. At frequencies of 100 mc and above, they are of little practical use, except under unusual circumstances.

b. Propagation. Figure 103 shows the portions of the radiated wave in the sky wave, the reflected wave, and the direct wave, also called the space wave. The sky wave is considered to be that portion of the radiated wave that reaches the receiving antenna after being deflected downward from its original direction. This wave becomes very weak as the frequency is increased, as shown by the dotted line. At 30 mc and above, most of the energy radiated passes through the ionosphere with only slight downward bending, excepting under unusual ionospheric conditions. Ground-wave propagation, strictly speaking, refers to the part of the radiated energy that moves along the surface of the earth at and closely above the boundary between the surface and the air above it. At frequencies below 3 mc, the ground wave (sometimes called the surface, or surface-guided wave) is strong enough to permit communication at distances far beyond the optical horizon. At the higher frequencies, however, the attenuation of the ground wave is great, and the true ground or surface wave decreases in strength so rapidly beyond the horizon that it is useless for practical purposes. Because of these conditions, sky and ground waves are relatively unimportant in this frequency range most of the time.

c. Reception. The radio energy intercepted by a receiving antenna, located relatively near but above the surface of the earth, is actually the *resultant* of the *direct* and *reflected* waves that reach that point. The reflected wave is almost always the weaker of the two, because of some absorption and scattering at the reflecting point. As a result, the actual strength of the signal generated in the receiving antenna may be either stronger or weaker than that which would be produced by the direct wave alone, the strength of the signal depending on the phase relationship between the direct and reflected waves at the antenna. The reflected wave is usually weaker, and the two waves seldom will cancel each other completely, even when they are exactly out of phase at the receiving antenna. Because of the relative ineffectiveness of sky-wave and ground-wave propagation in the vhf and uhf bands, only those points on or above the surface of the earth that can be reached by the direct wave are normally within effective communication range. The general effect on communications can be seen in figure 104. The aircraft at C and the antenna on the tower at B receive good signals, but the jeep at D receives only a very weak ground-wave signal.

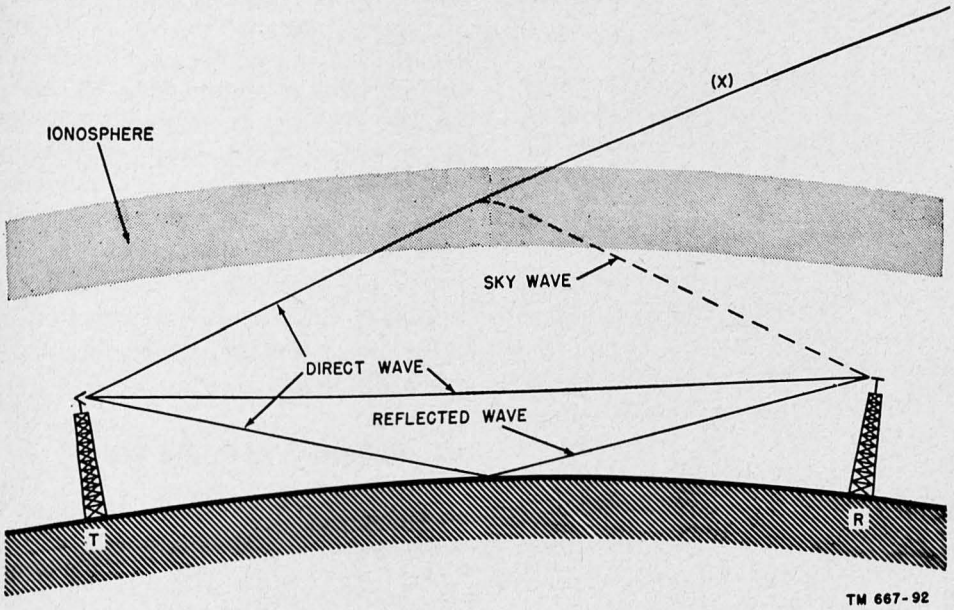

Figure 103. Direct, sky, and reflected waves.

d. Radio Horizon. Since all electromagnetic waves move in straight lines in free space, it might

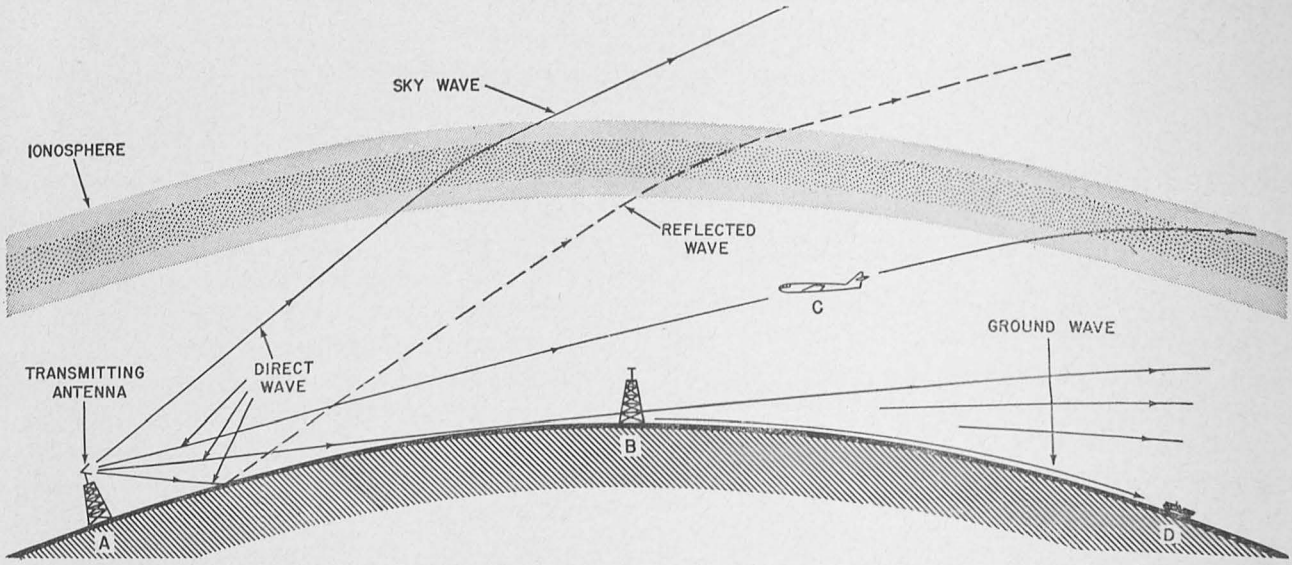

Figure 104. Practical propagation at vhf.

seem at first that communication beyond the range at which the receiving antenna actually can be seen from the transmitting antenna would be impossible. Experiment has shown that this is not true. The actual range beyond true optical line of sight is rather limited in the vhf and uhf bands, except under unusual atmospheric conditions. For this reason, radio waves above 30 mc often are referred to as quasioptical, to indicate that they behave similarly to light waves. Since radio waves in this frequency range do behave similarly to light waves, their propagation characteristics are often called line-of-sight transmission and reception. Actually, the radio horizon is somewhat beyond the optical horizon under normal conditions of the lower part of the atmosphere, which is called the troposphere. If the earth is considered to have a radius about 1.33 times as great as its actual radius, a straight line drawn from the transmitting antenna to the visible horizon of this larger earth will indicate the true radio line-of-sight distance. The difference in the behavior of light, and that of radio waves in this band, is due almost entirely to the difference in wavelength.

e. Practical Range of Communication. With reasonable antenna heights at the transmitter and receiver, and transmitters of 50 to 100 watts, reliable communication by a-m (amplitude-modulated) radio telephone can be had at distances up to 100 miles. This rough estimate of distance is for average rolling country during normal tropospheric conditions, and may be modified greatly by other factors. With greater antenna heights at one or both ends of the link, or with greater transmitter power, the reliable communication distance can be increased somewhat. Because the terrain varies greatly in different localities, and the radio equipment available for use is of many types, it is beyond the scope of this manual to attempt a description of the performance to be expected when all these factors are varied.

81. Reflection of Radio Waves

a. General. Reflection of radio waves in this frequency range occurs by the same process as at lower frequencies. When electromagnetic waves of *any* frequency encounter an object of different conductivity and/or dielectric constant from that of the medium in which they are moving, some of the energy will be reflected. The degree of reflection will depend on the conductivity and dielectric constant of the obstacle and its physical size as compared with the wavelength. The better the conductivity of the reflecting object, or the greater the dielectric constant, the more effectively it will reflect radiation of a given wavelength. Also, large objects of a given material reflect better than small ones. Objects of a half-wavelength or exact multiples of a half-wavelength, in the plane of polarization of the radio waves, reflect more effectively than those of other dimensions. Objects of less than one-fifth wavelength act rather to scat-

ter the radiation over a large angle than to reflect it in a given direction.

b. Ground Reflection Effects.

(1) One of the most important effects is that produced by radio waves reflected from the ground after leaving the transmitting antenna. The paths followed by the direct and reflected energy traveling between two antennas relatively near a plane reflecting surface are shown in figure 105.

(2) It can be seen that, for the conditions given, R is the only point on the surface from which reflected energy can reach antenna B from antenna A. Waves reflected from M and N do not pass through B, and would not produce any effect in an antenna located there. However, with antenna B located at any other point above the surface of the earth, there will always be some point on the surface from which it can be reached by reflected waves. The phase relationship between the direct wave arriving along path A-B and the reflected wave arriving along path A-R-B, is dependent on the difference in length of the paths A-B and A-R-B, the polarization, and the amount of phase shift that occurs at the reflecting point. The difference in path length will vary as the relative location of the antennas is changed in respect to the surface of the earth, and the phase shift at the reflection point will vary also as the angle of incidence and/or the conductivity and dielectric constant of the surface changes. The over-all effect of this combining of direct and reflected energy is to produce a pattern of alternate lobes of reinforcement and cancellation in the whole region above the reflecting surface. Figure 106 shows a cross section of the lobe structure, with the dotted lines drawn through points of maximum and minimum field strength.

(3) The curvature of the earth modifies the lobe pattern only slightly, because the radius of the earth is large in relation to the distance being considered. However, the effects of ground-surface irregularities are considerable, because they are approximately of the same magnitude as, or larger than the wavelengths of radio waves within this frequency band. The over-all result is that, even over fairly smooth terrain, the lobe structure of maximum and minimum signals is usually rather broken up. The differences in amplitude between maximum and minimum signal strength points are a great deal less than they would be over a perfectly regular, smooth surface. However, there is enough of the lobe structure effect to show up as considerable variations in received signal strength in an aircraft flying a straight course toward a distant transmitting antenna. As it approaches the transmitting antenna at a constant altitude, there will be alternate regions of maximum and minimum signal strength. Figure 107 shows a three-di-

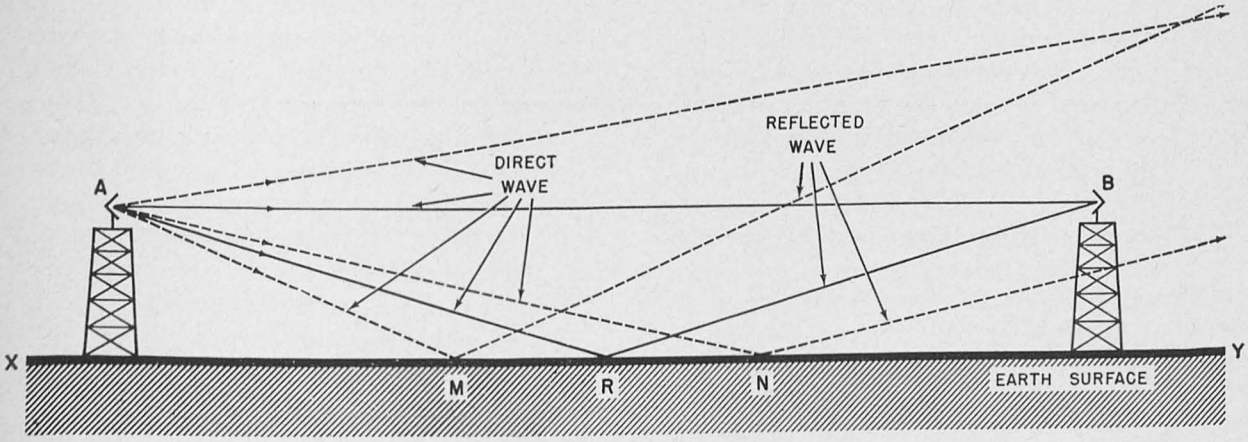

Figure 105. Direct and reflected waves above plane-reflecting surface.

221643°—52——8

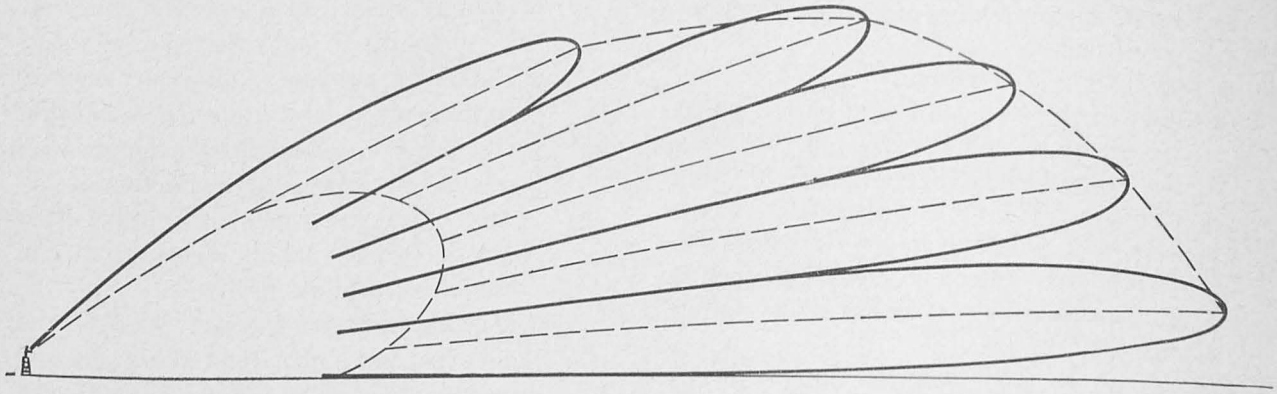

TM 667 - 93

Figure 106. Lobe structure of radiated field.

mensional view of the lobe structure, as it would be radiated from a directional antenna. The shape and depth of the lobes have been idealized as they would exist over very smooth terrain, in order to show the effect.

(4) Reflections from objects of good conductivity are particularly strong, and since many of the works of men are metallic, reflections from them often are troublesome. Whenever the waves of the desired signal reach the receiving antenna over paths of different lengths, there is the possibility of *multipath interference.* Obviously, when the difference in path length is great enough, the receiver receives two signal impulses carrying the same information, but separated by a short time interval. If the two signals are of approximately the same amplitude, the interference thus produced can be serious. In receiving television signals, multipath reception produces a ghost image or images displaced to the right of the main image on the face of the kinescope.

(5) The amount of displacement for a given difference in path length depends on the size of the television screen. For example, on a 16-inch screen the displacement will be about 1 inch for a path-length difference of 1,000 yards. Figure 108 illustrates the principle and the effect in the picture. The effects in receiving aural programs are just as undesirable. Distortion and unintelligibility result if the interfering reflected signal is strong, and the time difference is more than a hundredth of a second. Multipath interference caused by reflected

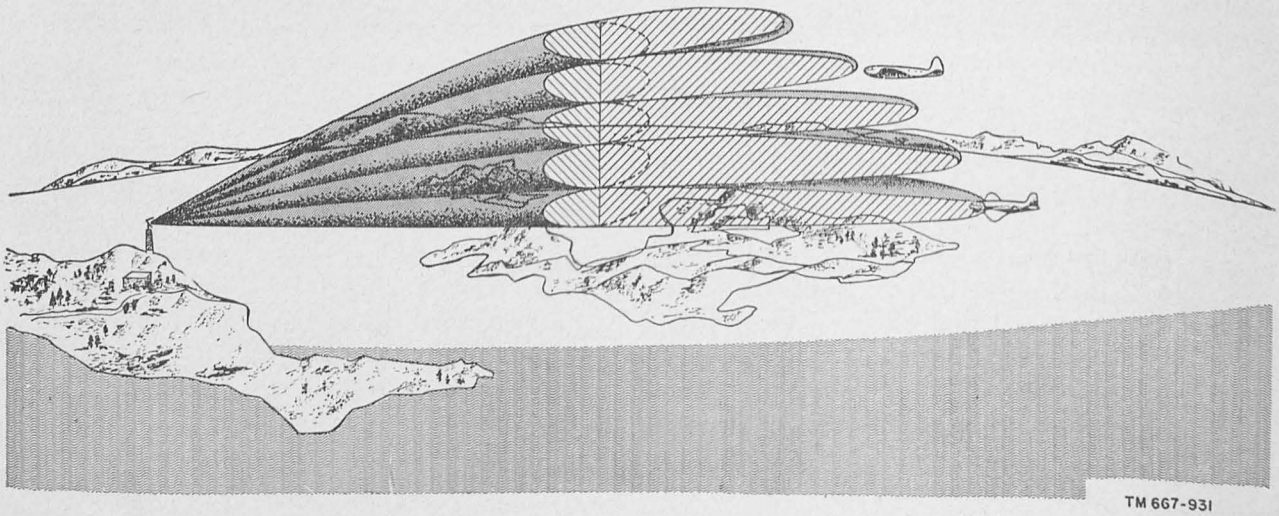

TM 667-931

Figure 107. Practical effects of lobe structure.

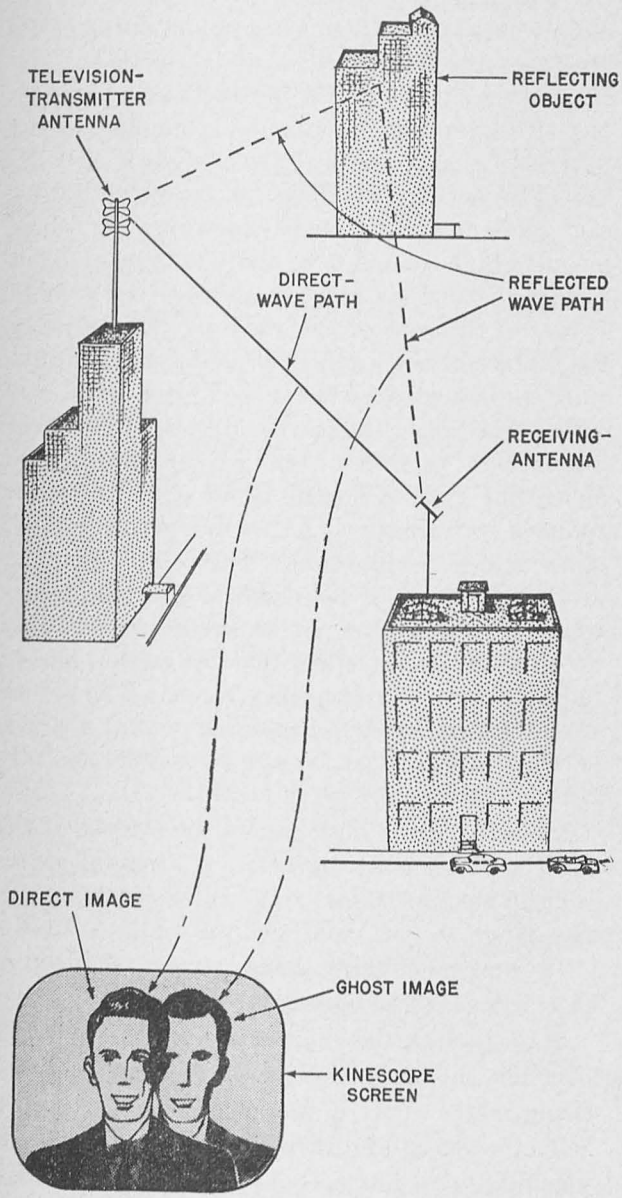

FM 667—901

Figure 108. Television ghost images.

signal energy is most likely to be serious in an area where there are large structures of metal. Interference can occur also in hilly or mountainous terrain, particularly if the transmitting antenna is on a peak, and the receivers are not in a position to pick up a strong direct signal.

(6) The phenomenon of reflection is made use of in directional antennas, where additional antenna elements are mounted in such a physical relationship to the actual radiating element, usually a dipole, that the reflected energy acts to reinforce the dipole radiation in a desired direction. Many antennas using parasitic elements depend on this principle for at least a part of their directivity. When objects are small in proportion to the wavelength of the radiation, the effect is to scatter the reflected energy with nonuniform distribution over a very wide solid angle approaching 360°. The amount of energy reflected to any given point from such obstacles is small, and usually not important. The reflection of radio waves from relatively sharp discontinuities in the dielectric constant of the atmosphere can take place at boundaries between air masses of different characteristics, or from strongly ionized parts of the aurora borealis or of the E layer of the ionosphere. Reflections of this sort sometimes return signal energy that ordinarily would escape into outer space to the surface of the earth at points several hundreds or even thousands of miles distant, for relatively short, erratic periods. The effect decreases with increasing frequency, and is seldom of any importance above 300 mc. Many f-m broadcasting stations in the United States, on frequencies near 100 mc, have been received for short periods in Australia.

82. Diffraction of Radio Waves

a. Diffraction is the phenomenon by means of which waves are bent around obstacles in the path of their motion. Most material objects offer some impedance to the passage of radio waves, either by attenuating, reflecting, or scattering the wave in new directions. Diffraction causes some of that portion of the wave just grazing the edges of the radio-shadow region behind the obstacle. Figure 109 shows the effects of diffraction of two different wavelengths.

b. Long waves are diffracted more around an obstacle of given size than shorter waves, as shown in A and B, where the actual amount of diffraction of both wavelengths is exaggerated for clarity. The strength of the diffracted wave drops very rapidly as the shadow zone is entered. This would make reception practically impossible in the shadow area behind large obstacles if the effects of reflection did not act to modify the result. Actually, some energy is reflected into the shadow area from other obstacles in the path of

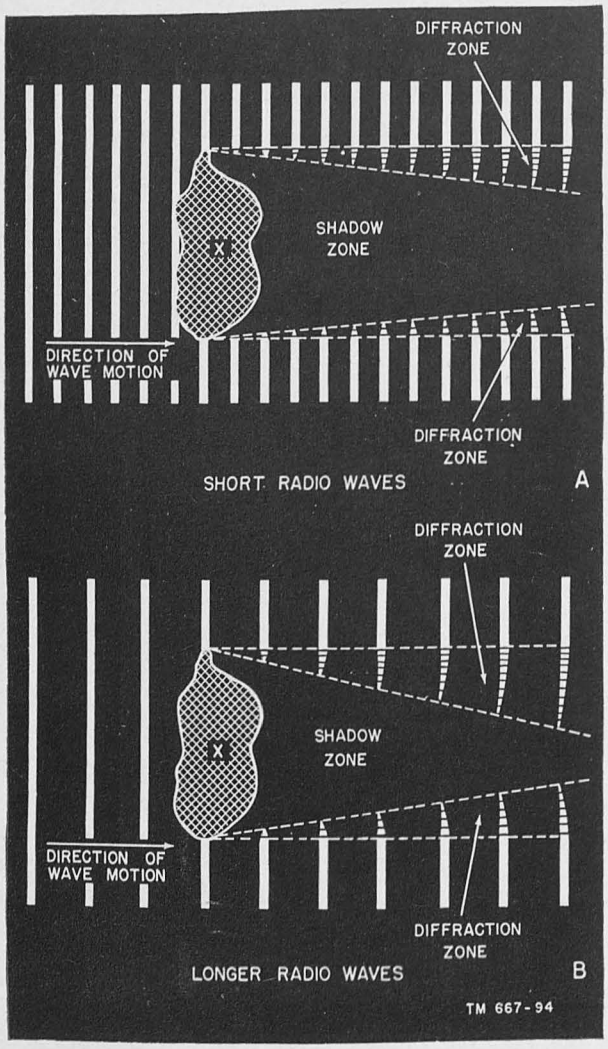

Figure 109. Diffraction of different wavelengths.

the radiated waves, thus minimizing dead spots. When the size of the obstacle is large compared with the wavelength of the radio waves, the shadowing effect may make reception from certain directions difficult or impossible.

c. The main obstacle that must be considered for radio waves in this frequency range is the earth itself and the irregularities of its surface. The effect of the surface curvature can be seen in figure 110. The transmitting antenna is mounted on the tower at A, and the optical line of sight is A-W-X. The only receiving antennas beyond point *W* that can receive undiffracted radiation are those mounted high enough to be above the line of sight, such as the antenna at B, or in the aircraft at P. However, the part of the radiated wave grazing the surface of the earth at *W* is diffracted downward, as indicated by the dotted lines, W-Y, and W-Z. The longer the wavelength, the greater the diffraction; therefore, the energy propagated along line A-W-Z would result from a longer radiated wavelength than that along line A-W-Y, other things being equal. This slight bending around the curve of the earth or over the larger topographical features of its surface is probably the most important effect that diffraction has on radio waves in this frequency range. The net effect of diffraction is to extend the actual distance to which a signal can be propagated successfully between antennas of given height.

d. Many natural obstacles on the surface of the earth are sufficiently large in relation to waves from 10 meters (30 mc) to .3 meter (1,000 mc) in this range to cast well defined radio shadows. Hills and mountains have strong shadowing effects, as shown in figure 111.

e. In general, the sharper the peak of the obstruction, the more effective diffraction will be in filling in the edge of the shadow area. In the field, the effect of diffraction over such ridges should be taken into account when sites for transmitting and receiving equipment are chosen.

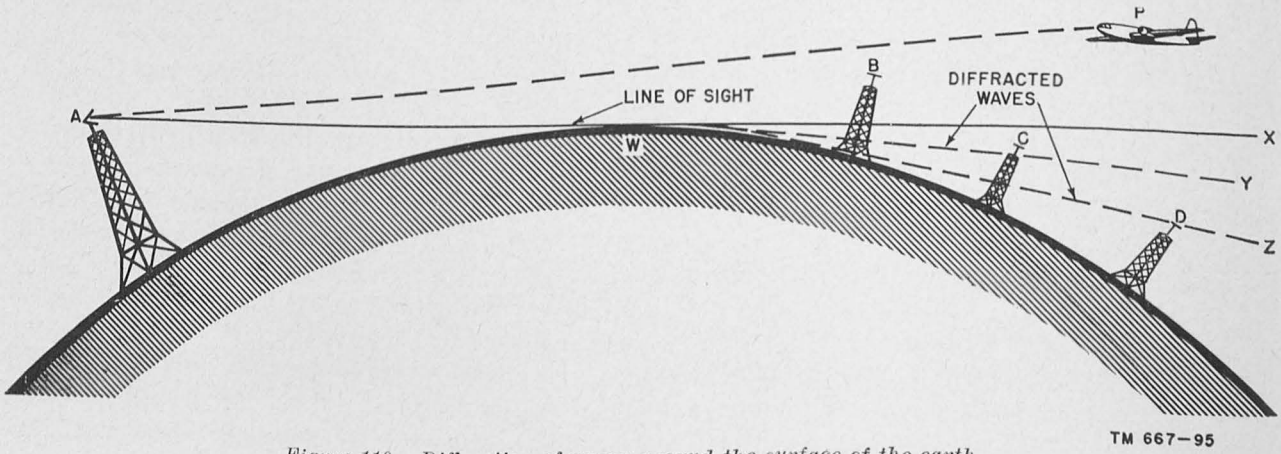

Figure 110. Diffraction of waves around the surface of the earth.

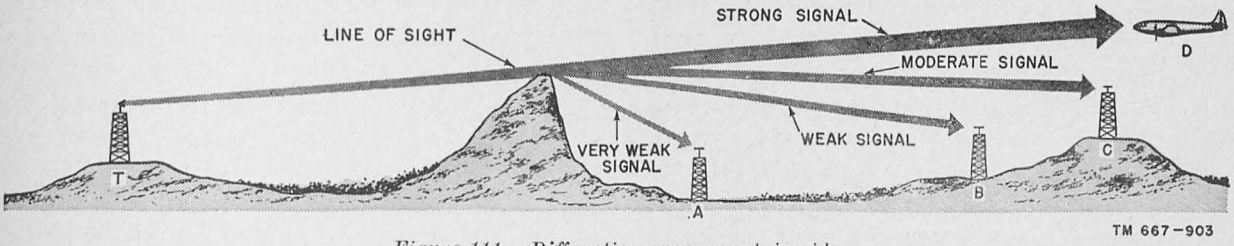

Figure 111. Diffraction over mountain ridge.

However, the natural features of the earth vary greatly in different localities, and only a few general rules for selecting sites for radio equipment operating in this frequency can be given. Even these must be used with caution, and tested by cut-and-try experiment when the results obtained are unsatisfactory. The following points should be taken into account:

(1) For maximum reliable range, erect the transmitting antenna as high, and as far removed from nearby objects, as possible. This is particularly important in reaching the low-lying areas of the surrounding country, such as the floors of canyons and valleys.

(2) If an obstruction between transmitting and receiving points prevents line-of-sight communication, it is better to place the receiving antenna away from the obstacle than close to it, as seen from the transmitting antenna. In figure 111, the receiving antenna at B usually will receive more signal from transmitter T than will an identical antenna installed at A, if both antennas are at about the same actual altitude.

(3) When it is impossible to site the receiving antenna at a favorable point, such as B or C, it may be practicable to use a directional receiving antenna pointed toward some reflecting object that receives a strong signal. This possibility is illustrated in figure 112.

83. Refraction

a. General. When a radio wave crosses a boundary between the two media having different dielectric constants, the direction of motion of the wave front is altered unless it strikes the boundary at exactly a 90° angle. This change of direction is called refraction. The angle of incidence of the wave on the boundary surface and the difference in dielectric constant of the two media govern the amount of this refractive bending of the wave path.

b. Refractive Index. The index of refraction of any medium is defined as the ratio of the velocity of light in the medium, and its velocity in a vacuum. The dielectric constant of the medium has a direct effect on the speed of propagation of electromagnetic waves moving through it, and consequently is connected directly with the phenomenon of refraction.

(1) In considering the effects of atmospheric refraction on radio waves in the 30- to 1,000-mc band, an understanding of the conditions in the first few thousand feet above the ground is important. Air is compressible, and the weight of the atmosphere above causes the air to increase in density as the surface is approached. Also, air near the surface usually contains more water vapor than air at higher

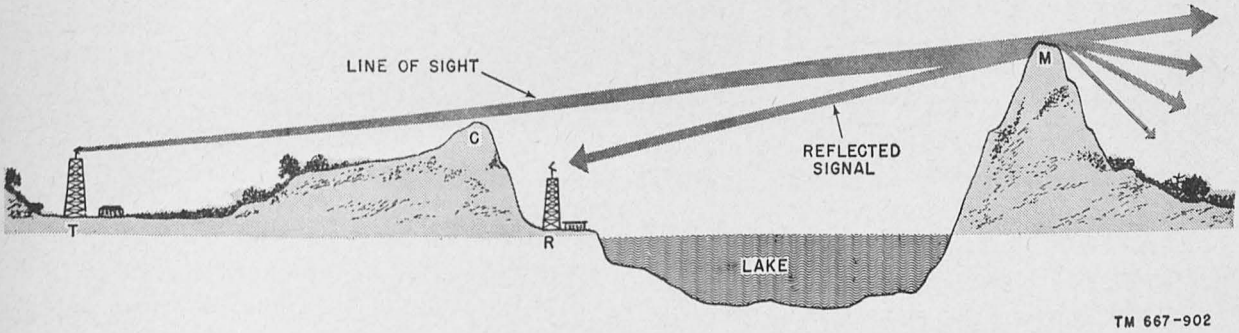

Figure 112. Receiving signal by reflection.

altitudes, because of evaporation from vegetation and the surfaces of bodies of water. Both of these conditions cause the dielectric constant to be greater near the ground, and decrease gradually with increasing altitude. As a result, the refractive index also is greater near the ground, and decreases with increasing altitude under normal conditions. The change in refractive index is not extremely large, but it is enough to cause radio waves propagated horizontally to be bent downward slightly. The amount of bending is proportional to the *rate of change* of refractive index with height, which is referred to as the refractive index gradient. This effect adds to the downward bending because of diffraction, and extends the expected communication range somewhat farther than the optical horizon. The total effect when the index of refraction diminishes smoothly with altitude is to extend the actual radio horizon to where the optical horizon would be if the radius of the earth were increased by one-third. Figure 113 illustrates the bending of the wave path under the standard atmosphere condition.

(2) Unfortunately, standard atmosphere conditions do not occur for more than a few hours with any great degree of regularity, because the gradient of refractive index is controlled by local weather and climatic conditions. The gradients of temperature, pressure, and humidity in the first few thousand feet of the atmosphere all affect the refractive index. Prediction of these conditions and their over-all effect on the refractive index gradient is difficult or impossible except in a few locations.

c. Types of Refractive Index Gradient Conditions. In the graphs of figure 114, the slope of the refractive index is plotted against height for four different atmospheric conditions. This method of plotting shows the *actual* direction of index change, which decreases gradually with height under normal conditions. When other methods of plotting are used for special purposes, the graph is called a *modified* index plot.

(1) In A of figure 114, the standard atmosphere condition is shown, with horizontally propagated waves bent downward somewhat less than the curvature of the surface of the earth. The density of the shading in the corresponding sketch of the earth profile also illustrates the gradient of refractive index.

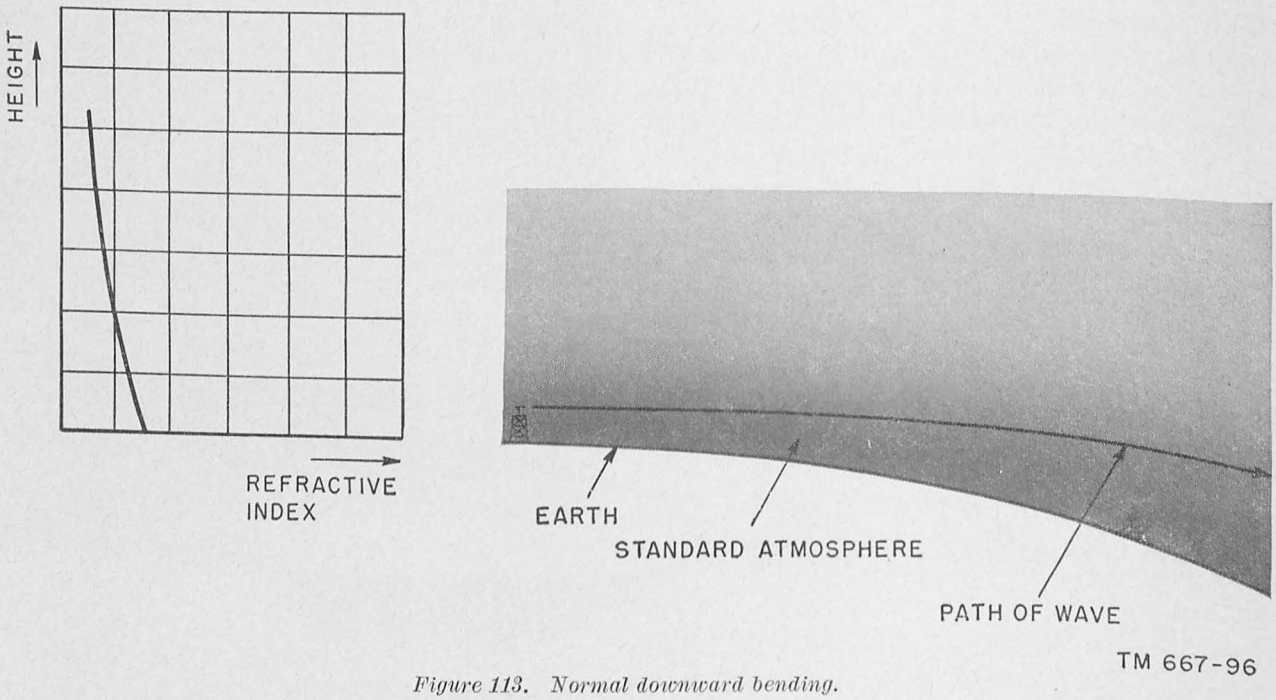

Figure 113. Normal downward bending.

(2) In B of figure 114, the refractive index gradient is considerably steeper below 1,100 feet, which causes the condition called a surface duct. When this condition exists, radio waves of appropriate length propagated horizontally from an antenna located within or closely above the affected air layer will be refracted downward more than the normal amount, and thus will reach points on the surface well beyond the usual range. When this effect is rather strong, it is called trapping, because the waves are at least partially trapped in the layer of abnormal refractive index gradient. In fact, such a layer may be considered to act somewhat as a wave guide with a leaky surface when the departure of the gradient from the standard condition is large. The greater the vertical thickness of the layer or duct, the longer the wavelength of radiation that will be trapped.

(3) C of figure 114, illustrates an elevated duct condition, in which the slope of refractive index approximates the standard value of the surface, but increases at about 700 feet, and returns to the standard slope at about 1,200 feet. Under such conditions radio waves propagated horizontally from antennas positioned below, in, or close above the duct layer will be at least partially trapped in the layer. A receiving antenna well beyond the normal range may pick up a relatively strong signal, if it is at an altitude between the upper and lower limits of the duct. An antenna at the same location either above or below the boundary surfaces of the duct will receive less energy than the same antenna sited within the duct.

d. Substandard Layer. An opposite condition to that of a surface duct is shown in D of figure 114. The slope of the line indicates that the index is substantially constant, or perhaps even increases slightly with height. Such a layer sometimes is called a substandard layer. Horizontal propagation in a substandard layer tends to move more nearly tangent to the curve of the earth's surface than under standard conditions, or perhaps even to be refracted upward slightly. The effect is to shorten the range of successful propagation between antennas positioned below the top of the layer, but there is little effect on expected range between antennas above it. Only those radio waves in the 30- to 1,000-mc range are likely to be heavily trapped, except in a few localities where unusually thick duct layers occur. Table III shows the approximate relationship between duct thickness and the maximum wavelength that will be heavily trapped, when the duct is well established.

Table III. Duct Heights and Wavelengths

Duct height	Wavelength
80 feet	0.1 meter.
120 feet	0.3 meter.
400 feet	1 meter.
600 feet	3 meters.
2,000 feet	10 meters.

e. Trapping. Trapping extends the possible communication range most when both transmitting and receiving antennas are within the duct, but still has some effect when either antenna or both antennas are above, but fairly near the upper surface. The general effect for antennas sited at various heights in respect to the duct are shown in figure 115.

f. Climatic Conditions. Some geographical localities already are known to favor duct formation during portions of the year because of local climatic conditions. The Mediterranean Sea, Persian Gulf, and Northern Indian Ocean areas show strong duct formations during certain seasons, and many parts of the Pacific Ocean also develop ducts frequently. As a specific example of an extreme effect, a 200-mc radar at Bombay, India, during World War II, observed points on the Arabian coast regularly during the period from February to May inclusive, at ranges up to 1,700 miles. In general, ducts seem to occur most frequently in any locality during the hot months, under conditions that permit the atmosphere near the surface to become stratified. Scientific study of the conditions that produce ducts has not yet made possible accurate prediction of duct occurrence or effects, excepting in a few localities. However, measurements of the temperature, pressure, and humidity gradients in the lowest two or three thousand feet of the atmosphere at any location make possible reasonably accurate com-

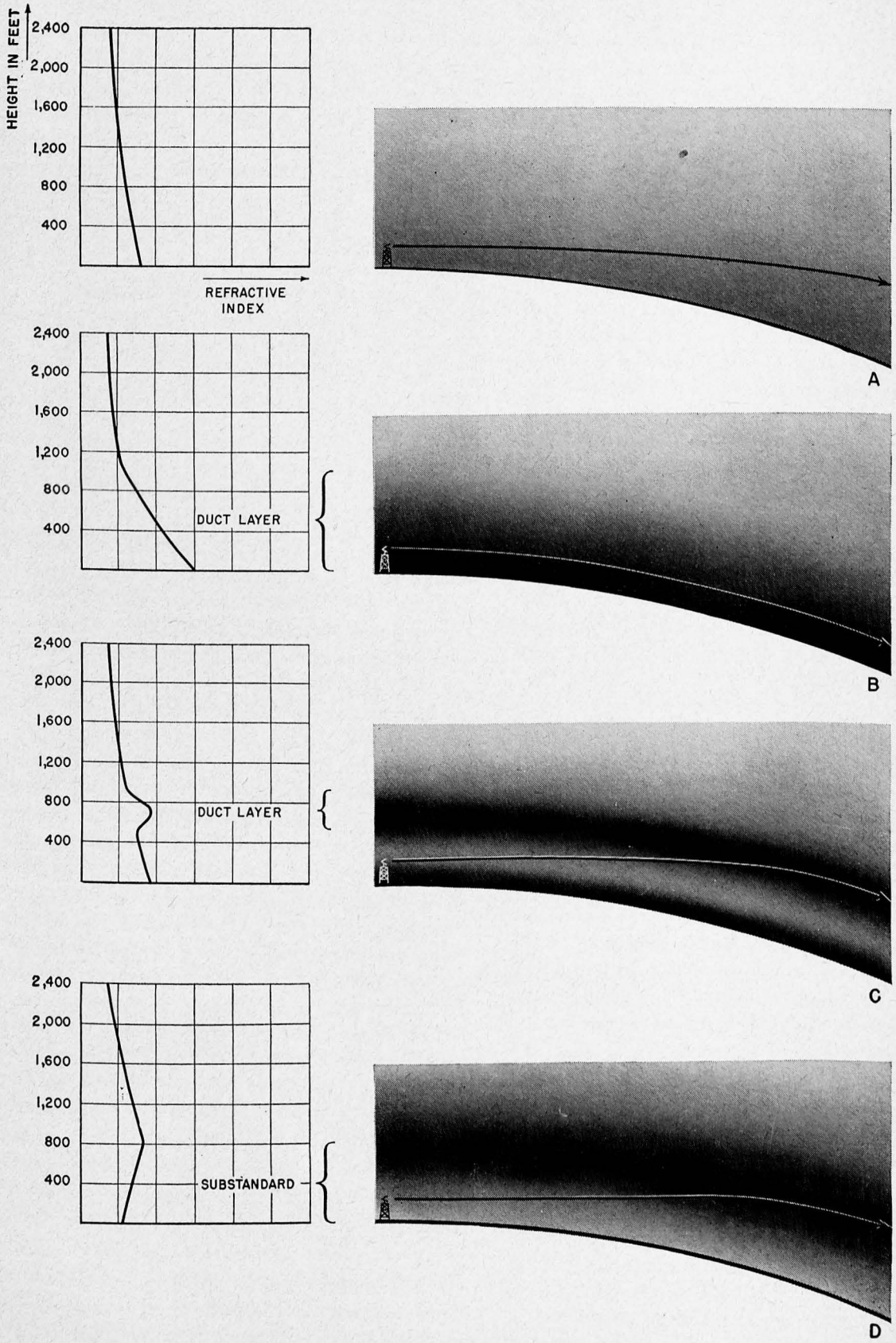

TM 667-97

Figure 114. Effects of index gradient.

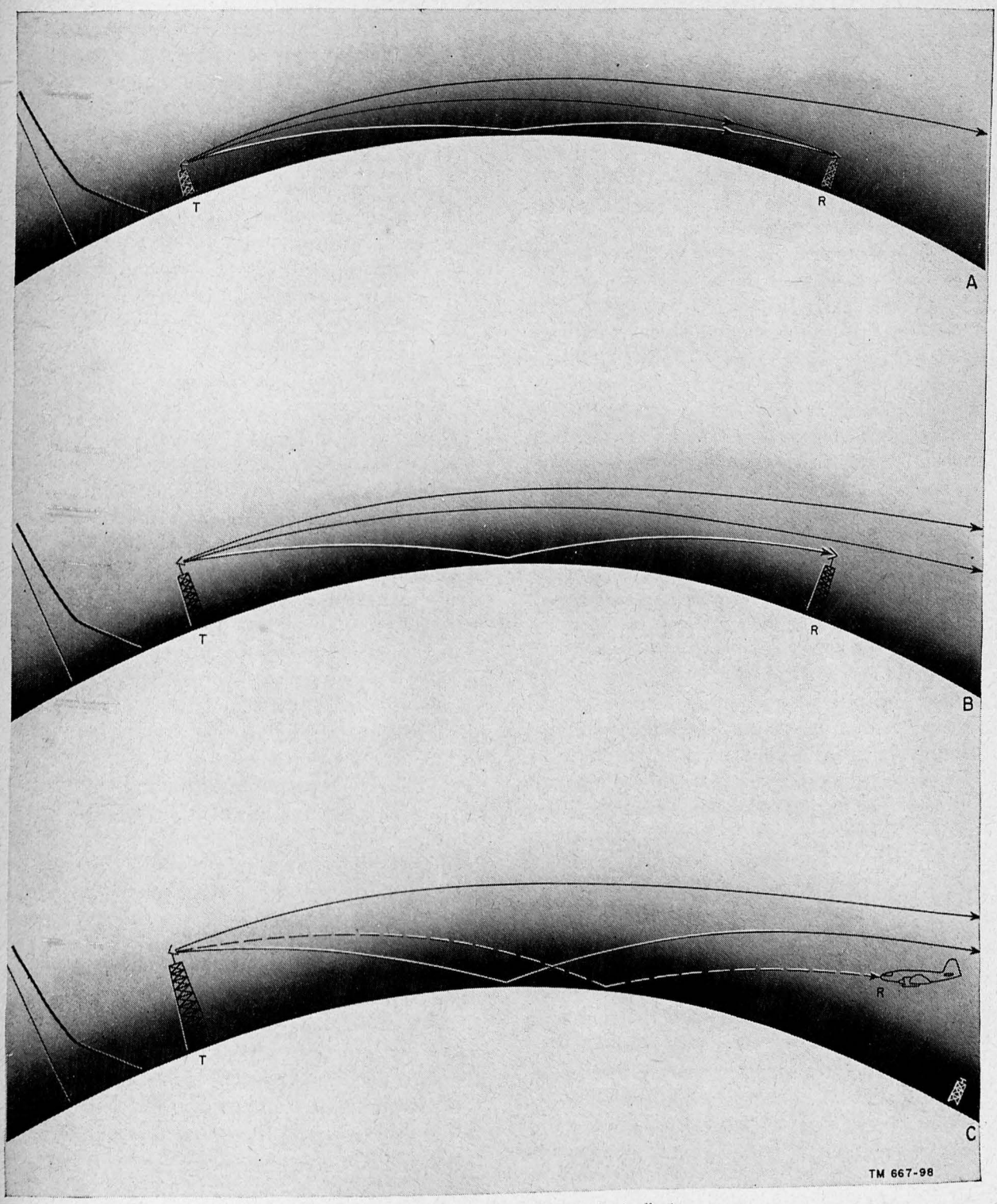

Figure 115. Antenna heights and duct effects.

putation of the existence, intensity, and extent of duct formation.

84. Attenuation, Fading, and Noise

a. Radio waves in this frequency range are attenuated little by the atmosphere in passing through it between the transmitting and receiving antennas. However, the effects of heavy vegetation can cause serious attenuation, even over relatively short distances. In heavy jungle or forest, unless one antenna or both antennas can be mounted well above the top of the general level of growth, the communication range is reduced drastically. In dense, heavily foliaged, moist, tropical rain forest, for instance, the maximum dependable range for field equipment of moderate power may be as little as ½ mile. This degree of attenuation can occur even at 30 mc and lower frequencies, and becomes more serious with increasing frequency.

b. Fading at distances up to slightly less than the optical horizon is relatively unimportant for this band of frequencies. However, at and beyond the optical horizon, in the region where diffraction and refraction effects are important, severe rapid fading can occur. The effect is caused partly by interference between components of the received signal arriving over paths of slightly different lengths, and small instantaneous variations in refractive index which result from atmospheric turbulence. The rapidity and depth of such fading increase somewhat with frequency. The effects can be minimized by the use of diversity reception and similar techniques.

c. Steady atmospheric noise is low even at the lower limit of the frequency band, and declines steadily as the frequency is raised. Noise caused by severe electrical storms near the receiving location may reduce circuit effectiveness at frequencies up to 70 or 80 mc, but even their effects decline rapidly with frequency. Electrical noise generated by the sun and stars (called stellar noise) also has some effect within this frequency range, but its average level is such that it is masked by the effects of atmospheric noise below 10 mc. In the region from 30 to 300 mc, this noise can be heard in very quiet receivers as a rather weak, smooth hiss resembling the internally generated noise of the set. The noise in the receiver input circuits begins to override the stellar noise in the 300-mc region for even the quietest receivers, unless extremely high-gain antennas are used. Noise from electrical devices such as power tools, razors, diathermy equipment, and vehicle ignition systems is a much more serious limiting factor in many localities. This is a high-amplitude impulse noise, with very steep wave fronts, that tends to shock-excite sharply tuned receiver circuits. The resulting interference to communication circuits can be severe up to 200 or 300 mc, but declines as the frequency is increased. In areas subject to such noise, peak-clipping noise limiters in receiving equipment have proved effective in minimizing its actual effects on circuit communication efficiency.

85. Antennas

a. Practical antennas used in the 30- to 1,000-mc range have the identical electrical principles of antennas at lower frequencies. The effective power gain in the desired direction usually is obtained by one or more parasitic, or suitably phased, driven elements. The principal differences between antennas for this range and those used at lower frequencies is caused by the shorter wavelengths. Since there is a direct relationship between wavelength and the physical length and spacing of antenna elements, multielement antennas of large, effective, signal-gathering area and high directivity are physically practicable in this part of the frequency spectrum.

b. Above approximately 100 mc, corner reflectors can be used, and at about 400 mc the wavelength is such that even a parabolic reflector excited by a dipole at the focal point becomes practicable. In the remaining region, up to 1,000 mc, the use of the parabolic reflector for permanent, point-to-point installations and arrays of stacked rhombic or Yagi antennas become effective. Figure 116 shows typical antennas for use in the 30- to 1,000-mc frequency band.

c. The reciprocity principle, which shows that the gain and directivity of an antenna are the same when either transmitting or receiving, applies to this and all other parts of the frequency spectrum. The net result of the shortness of wavelengths in the 30- to 1000-mc band is to make physically practicable antennas of such high directivity and power gain that equipment of low to moderate power can provide reliable communication or other service at ranges of from 100 to 300 miles, depending on atmospheric conditions, location, coverage pattern, and similar factors. The high directivity possible also aids in obtaining

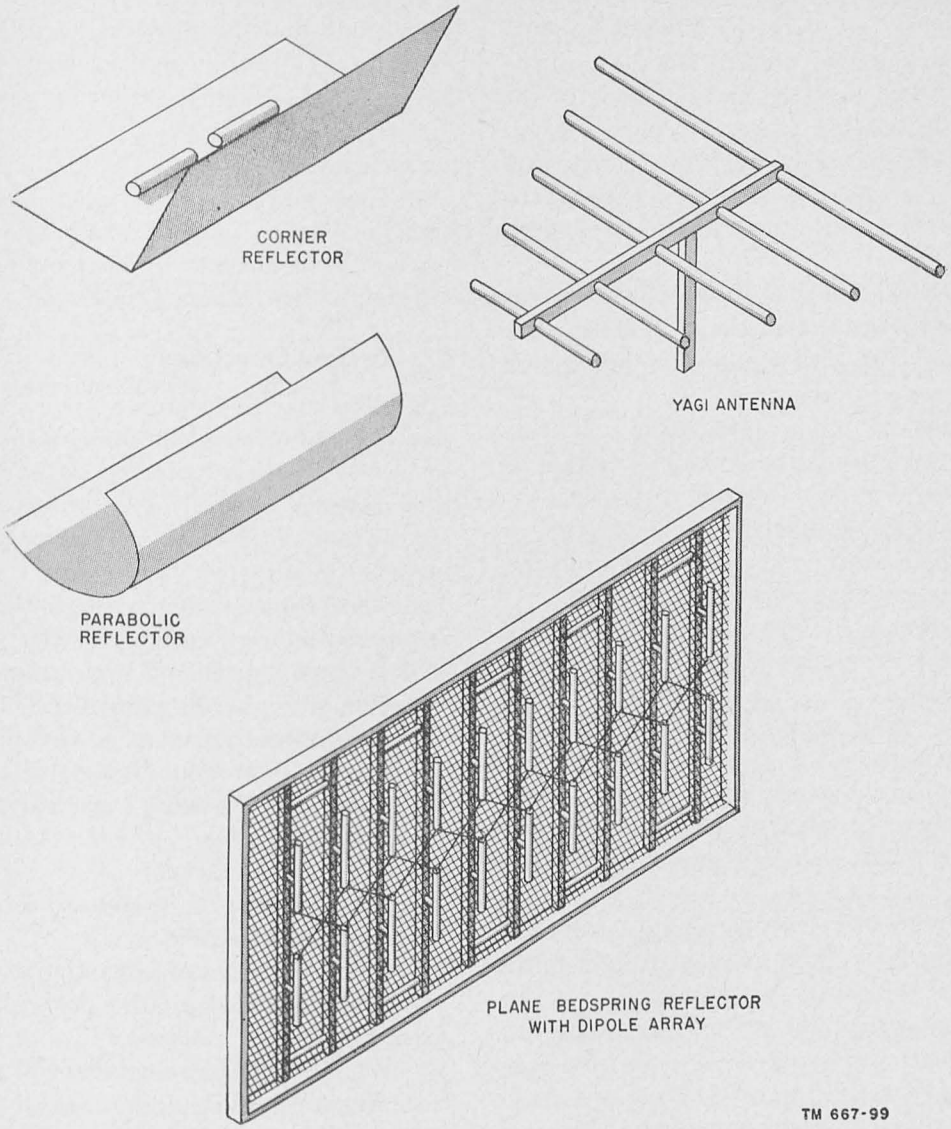

Figure 116. Typical antennas.

reasonable secrecy and security, makes rather accurate direction-finding possible, and aids in overcoming the effects of noise, interference, and fading.

86. Summary

a. The effects of the atmosphere and the surface of the earth on the propagation of frequencies above 30 mc vary with climate, terrain, geographical location, frequency, and other conditions.

b. In any radio wave, the electric and magnetic fields are at exactly a 90° angle to each other, and both are also at a 90° angle to the direction of motion.

c. A vertically polarized antenna radiates equally well in all horizontal directions.

d. The direct wave is defined as that part of the radiated energy that travels directly from the transmitting antenna to the receiving antenna, without being returned from the ionosphere above, or reflected from the surface of the earth, or objects above it or on it.

e. At the higher frequencies, the attenuation of the ground wave is great, and the true ground or surface wave decreases in strength so rapidly beyond the horizon that it is useless for practical purposes.

f. If the earth is considered to have a radius of 1.33 times its actual radius, a straight line drawn from the transmitting antenna to the visible horizon of this larger earth will indicate the true radio line-of-sight distance.

g. When electromagnetic waves of any frequency encounter an object of different conductivity and/or dielectric constant from that of the medium in which they are moving, some of the energy will be reflected.

h. The better the conductivity of the reflecting object, or the greater the dielectric constant, the more effectively it will reflect radiation of a given wavelength.

i. When objects are small in proportion to the wavelength of the radiation, the effect is to scatter the reflected energy with nonuniform distribution over a wide angle approaching 360°.

j. Reflection of radio waves from relatively sharp discontinuities in the dielectric constant of the atmosphere can take place at boundaries between air masses of different characteristics, or from strongly ionized parts of the aurora borealis, or of the E layer of the ionosphere.

k. Diffraction is the phenomenon by means of which waves are bent around obstacles in the path of their motion.

l. When a radio wave crosses a boundary between two media having different dielectric constants, the direction of motion of the wave front is altered unless it strikes the boundary at exactly a 90° angle. This change of direction is called refraction.

m. The index of refraction of any medium is defined as the ratio of the velocity of light in the medium, and its velocity in a vacuum.

n. At and beyond the optical horizon, severe rapid fading caused by interference between components of the received signal arriving over paths of slightly different length can occur, as well as small instantaneous variations in refractive index which result from atmospheric turbulence.

o. Steady atmospheric noise is low even at the lower limit of the frequency band, and declines steadily as the frequency increases.

p. Because there is a direct relationship between wavelength and the physical length and spacing of antenna elements, multielement antennas of large, effective, signal-gathering area and high directivity are physically practicable at the higher frequencies.

q. The reciprocity principle, which shows that the gain and directivity of an antenna are the same when either transmitting or receiving, applies to all parts of the frequency spectrum.

87. Review Questions

a. Why may the plane of polarization of the received radio wave at any given point differ somewhat from the polarization at the transmitting antenna?

b. What is meant by space wave? By surface wave?

c. What does the degree of reflection of high-frequency radio waves depend on?

d. What is the effect of ground reflection?

e. How does the directional antenna make use of the reflection phenomenon?

f. What is diffraction?

g. What are the effects of diffraction on the propagated wave?

h. What is refraction?

i. What governs the amount of refractive bending of the wave path?

j. Define the index of refraction of any medium.

k. What are some of the factors affecting the refractive index?

l. What is meant by duct transmission?

m. What is a substandard layer?

n. At what time of the year do duct formations generally occur?

o. What are the advantages of a highly directional antenna?

p. Why are parabolic reflectors used in the higher frequency ranges?

CHAPTER 10

HIGH-FREQUENCY RADIO-COMMUNICATIONS SET

88. System Requirements

a. General. Progress in the field of radio communications has reached a point where the equipment is designed with a specific group of performance characteristics in mind. This is particularly true in military equipment, where many requirements are severe. This tendency toward specialization leads to some confusion in considering the many sizes and types of equipment classed as radio sets. Each radio set, or group of pieces classed as such, has as its main function the communication of information from one place to another by means of radio waves. The information to be transmitted may be human speech, meter readings, the presence or absence of an object (as in radar), or *any* kind of information that can be converted into equivalent electrical impulses. Practically *any* data can be converted directly or indirectly into electrical impulses. These impulses can be transmitted from place to place by means of radio waves, and reconverted into a nearly perfect replica of the original data. The *kind* of information to be transmitted affects the design of the radio-frequency equipment in the system very little, but the *quantity* of information to be transmitted in a given unit of time is an important factor. The amount of information or data to be transmitted through the system in a given time unit—say 1 second—is limited directly by the bandwidth of the whole system and the amplitude range it can handle. The amplitude range is limited by the maximum power capability of the equipment and the unavoidable noise level. The quantity of information to be carried during a given time unit is one of the fundamental considerations that affect all the practical problems of radio-equipment design. For example, a bandwidth of 6 mc is required to transmit a sufficient quantity of information per unit of time for a reasonably good television picture. On the other hand, a bandwidth of 3 kc is sufficient to permit effective speech transmission, and a bandwidth of only a few hundred cycles is enough for high-speed radio telegraphy.

b. Practical Factors. The required bandwidth affects equipment design, no matter how components are improved, or what the propagation conditions may be. The limitations and the large number of practical performance factors needed in the many different uses of radio tend to overshadow the importance of bandwidth. Some of the more important practical considerations in military applications of radio are as follows:

(1) Maximum range over which reliable communication must be maintained.
(2) Radiation pattern desired: directional or nondirectional.
(3) Permissible size, weight, and power drain of equipment.
(4) Service conditions, such as fixed or mobile station, and climatic conditions expected.
(5) Operational life expectancy required.
(6) Reliability.

c. Effects of Practical Factors. The effects of these widely varying requirements make necessary a wide variety of radio sets. Consider, for example, two widely different applications of radio quipment, such as a proximity fuse and a radio-telegraph transmitter for long-distance, point-to-point communication. The size, weight, and power drain of a proximity fuse are obviously limited, and the service life need be only seconds, whereas the large transmitter will be expected to function for many years with normal maintenance.

89. Basic Units and Functions

a. Transmitter-Equipment Functions. The information to be transmitted through the system shown in figure 117 is applied first to the transducer unit, which translates the information into an electrical impulse that is proportional in some way to the data. In a radio-telephone transmitter, for example, the transducer is a microphone which

converts the sound waves produced by the voice of the operator into an electrical signal. In a radio set used for telemetering, the transducer might be a temperature or strain gage mounted in a guided missile which converts a temperature change or mechanical strain into an electrical signal. Whatever the transducing device used, its electrical output is applied to another part of the transmitter where it is caused to vary the radio-frequency output with the variations of the data. This process actually takes place in one of the radio-frequency amplifying stages of the transmitter. However, the actual power produced by the transducer is seldom great enough fully to modulate the radio-frequency output of the transmitter. For this reason, the transducer output is amplified first to the required power level, and the output is applied to an r-f amplifier stage, where the modulation process takes place. The power amplifier that actually supplies the amplified signal from the transducer to the r-f amplifier is called the modulator. The modulation method may vary the amplitude or frequency of the r-f output power of the transmitter with the variations of the data applied to the transducer, or it may be a form of pulse modulation, in which the spacing or amplitude of a series of pulses is caused to vary with the applied data. The essential part of the process is the variation of the r-f output in accordance with the data to be transmitted. The source of the radio frequency (the oscillator) may be modulated directly. However, the oscillator frequency usually is amplified further and/or multiplied several times, and then applied to a power amplifier. The modulating signal actually may be with the carrier in any r-f stage, depending on the system of modulation chosen. The function of the transmitting antenna is to radiate the modulated r-f power to the desired receiving points.

b. Receiver-Equipment Functions. In the receiver, the opposite process takes place. The antenna collects some of the energy radiated from the distant transmitting antenna, and produces a radio-frequency current in the antenna that exactly resembles the vastly stronger current flowing in the transmitting antenna. The relatively feeble r-f current from the receiving antenna is amplified in suitable amplifying stages that are also selective. It then is demodulated in a stage that reverses the process of the transmitter, and yields an electrical signal similar to the output

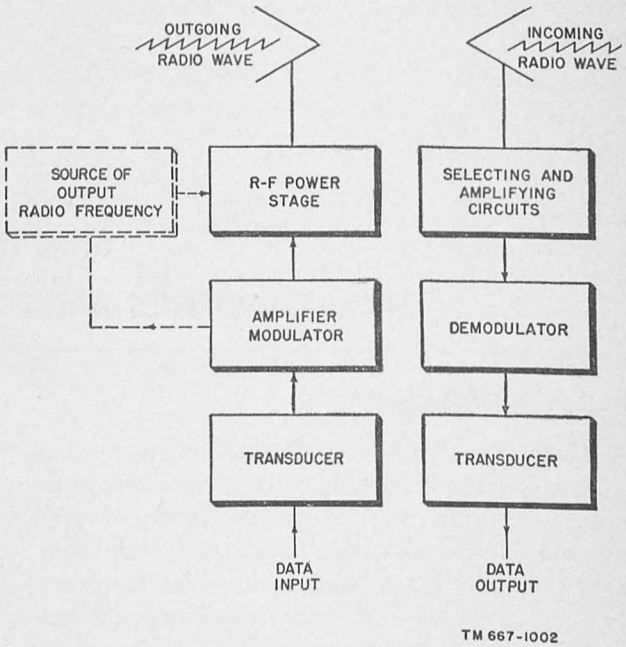

Figure 117. Block diagram of a basic transmitter and receiver.

of the transducer at the transmitter. This data-bearing signal then is applied to a suitable transducer, either directly or after further amplification, and the original data are reproduced in some desired form. In a radio-telephone circuit, the transducer at the receiver may be a loudspeaker or headphones, which recreate the sounds entering the microphone at the transmitting end. The data-bearing signal can just as easily operate some other sort of transducer, such as a recording-machine cutting head. This great flexibility is one of the many reasons that radio communication is such a powerful aid to military operations.

90. Typical Radio Set

A transmitter and receiver housed in separate weatherproof cabinets, together with their power supplies and spares, are shown in figure 118. The basic function of this equipment is to transmit and receive voice and tone-modulated signals across stretches of terrain where the stringing of wire telephone lines is not feasible. In such service, the equipment is required to be in continuous operation for long periods with relatively little attention. Because of this, the transmitter and receiver are of rugged design, both electrically and mechanically, to insure stability and dependability. The weatherproof cabinets provide good mechanical protection, and a heating unit is in-

cluded in each, to keep the interiors warm and dry. In the type of service for which this equipment is designed, the signal coming in through the receiver is amplified, demodulated, and applied to the transmitter as a modulating signal. The power output of the transmitter is radiated from the transmitting antenna toward the next relay point, where a similar set repeats the process. Thus the whole set functions essentially like a repeater amplifier in a telephone line, to reamplify and pass on whatever information is supplied to it in the received signal. Unlike an actual repeater, however, it can handle a signal in only one direction. To permit operation in both directions, a second unit is needed at each relay point. This principle is illustrated in figure 119, which is a block diagram of a two-way system with two relay stations operating between terminals separated by approximately 200 miles. The actual distance spanned in a given relay depends on the terrain, noise, interference, propagation characteristics, and similar factors that must be determined by trial and error in the field. In general, satisfactory operation over a distance between relay points of line-of-sight distance plus about 10 percent can be expected under average conditions.

91. Transmitter Characteristics

a. Electrical Features. The transmitter, A of figure 118, is an amplitude-modulated unit capable of 25 watts of r-f power output on any one of several frequencies between 132 and 156 mc. It is crystal-controlled by an oscillator operating at one-eighteenth of the output frequency. The third harmonic output of the oscillator stage is amplified and multiplied in frequency by a tripler stage, and applied to a push-push doubler stage, the output of which drives the final amplifier. The oscillator and following multiplier stages use 5763 miniature pentodes, and the final amplifier is an 829B, as shown in the block diagram of figure 120. The audio amplifier and modulator, as a result of using inverse feedback, are capable of fully modulating the transmitter output with very low distortion. This is necessary in this equipment, because a band of audio frequencies from 250 to 12,000 cycles per second must be handled. This audio bandwidth is required because, at maximum capacity, four actual speech channels are carried by the system. The components forming the tuned circuits in all stages of the transmitter are of the lumped-property type; their efficiency at the highest frequency involved is adequate, and stability is assured by the use of crystal control and the temperature and humidity control provided by the closed cabinet and heating unit.

b. Mechanical Features. The various chassis of the transmitter (A of fig. 118) are mounted vertically on a supporting rack, which can be rotated about a vertical axis on supporting bearings to give access to power and control connectors in the rear. The vertical position of the rack reduces the floor space needed for the unit in indoor installations, and supports the parts in a position that makes maintenance and repair relatively easy. It also permits good circulation of air within the cabinet. This minimizes the danger of developing local hot spots in the equipment during long periods of continuous operation. Cables for power-supply voltages and input and output signals are cut to lengths that permit turning the rack for inspection and adjustment without shutting down the equipment. The power output is fed to the antenna through a coaxial-cable transmission line, which passes through a weather-tight packing gland in the top of the cabinet. The transmitting antenna is mechanically rugged, and can withstand wind pressures up to at least 100 miles an hour, and ice loading up to at least ½-inch thickness. The mechanical arrangement of the antenna mounting brackets permits orienting the unit for either horizontally or vertically polarized radiation. The choice of the polarization plane usually is influenced by terrain and propagation conditions, and the kind and amount of noise and interference experienced.

92. Receiver Characteristics

a. Electrical Features. The receiver is a single-conversion superheterodyne, similar in design to communications receivers for frequencies below 30 mc. Its principal features can be seen in the block diagram of figure 121. The signals intercepted by the receiving antenna enter the cabinet through a coaxial transmission line, and are coupled inductively to the tuned-grid circuit of the r-f amplifier stage. The tuned circuits of this and other stages of the receiver are of the lumped-component, coil-and-capacitor type common at 30 mc and below. At the highest operating frequency of this radio set, such circuits are sufficiently stable and efficient to justify their use. The amplified signal from the r-f stage is mixed

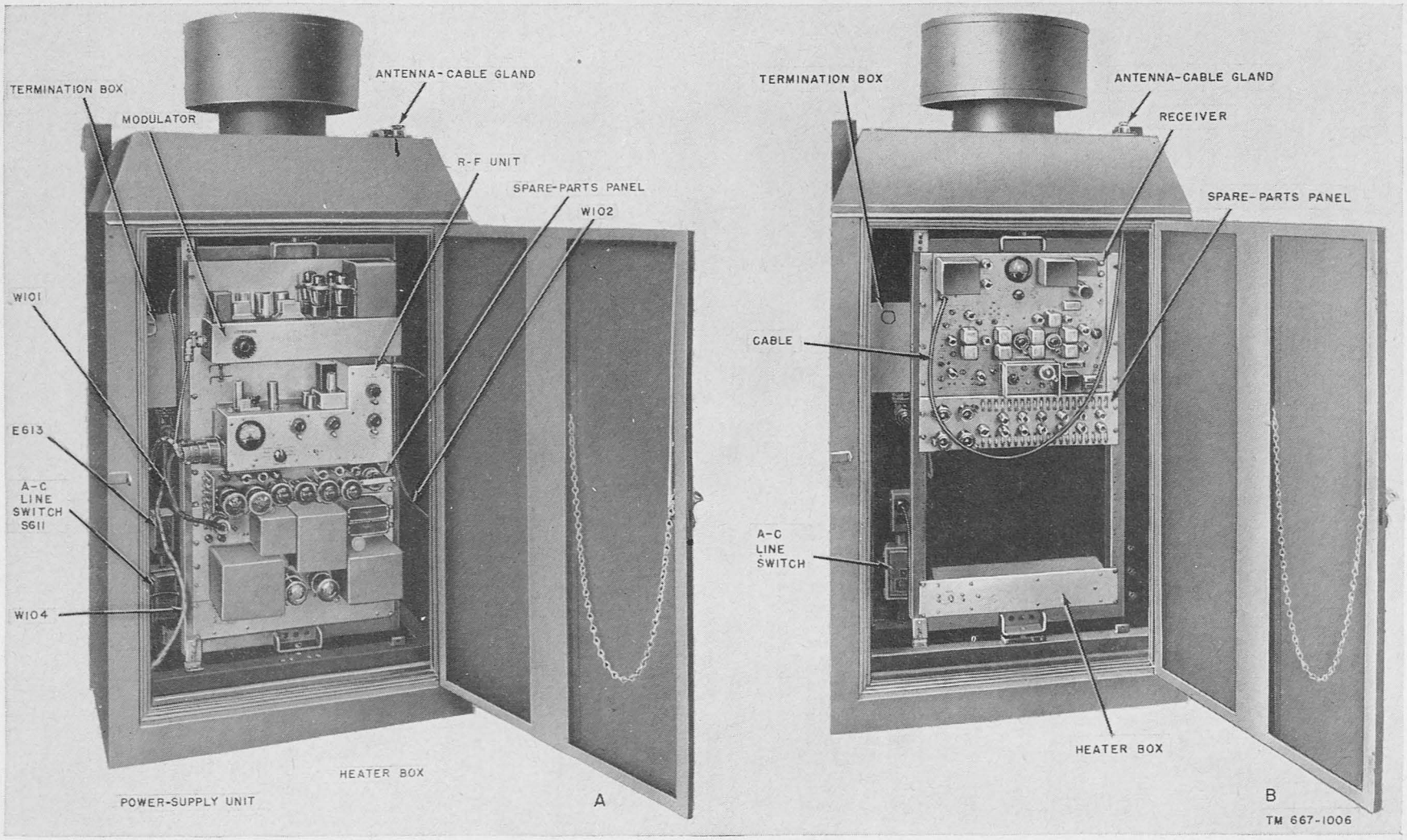

Figure 118. Radio receiver-transmitter.

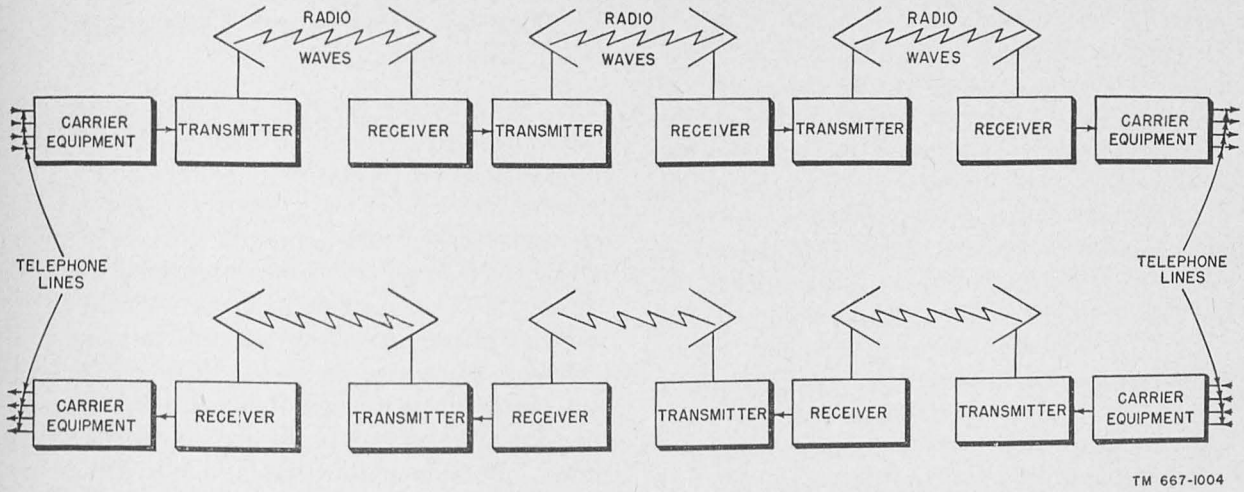

Figure 119. Block diagram of radio relay system.

in the following stage with the local oscillator signal, and converted to the intermediate frequency, which is 6.8 mc. The excellent frequency stability of the receiver is due in large part to the use of a relatively low-frequency crystal-controlled oscillator, followed by tripler and doubler stages. The i-f amplifier stages that follow the mixer are similar to those found in any communications receiver. Remote cut-off pentode amplifier tubes are used so that avc (automatic volume control) can be applied effectively to all stages. In equipment designed for long periods of operation with a minimum of attenuation, good avc action is particularly important because of the large

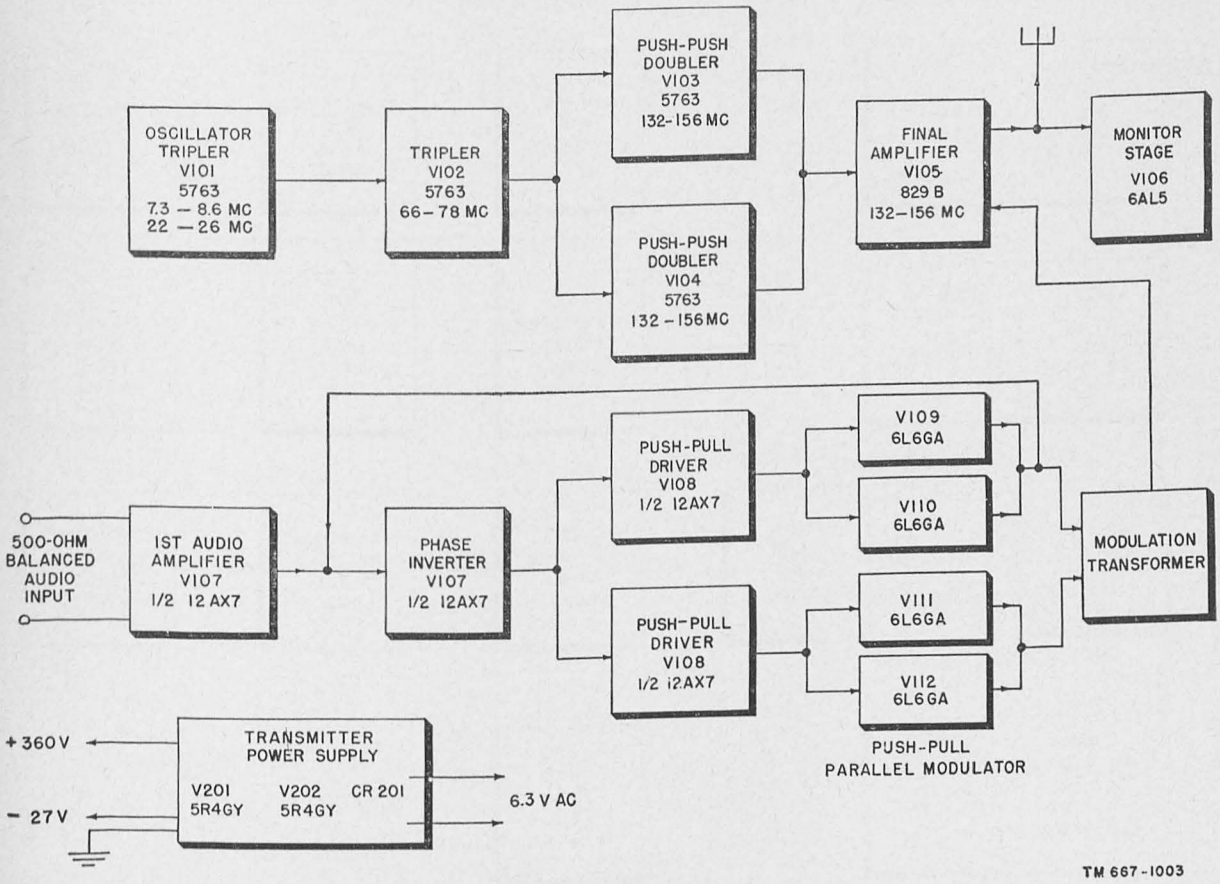

Figure 120. Block diagram of transmitter.

221643°—52——9

changes in level of the incoming signal produced by changing propagation conditions and other causes. The only unusual feature of the avc circuit is the use of one triode unit of a 12AX7 tube as a vacuum-tube voltmeter to indicate the strength of the incoming signal. Since the output of the receiver is applied to modulate the transmitter, it is necessary that the level of the modulating signal be controlled carefully so that the transmitter power will be fully modulated, but not overmodulated. The detector and audio-amplifier stages of the receiver are similar to those used in conventional receivers, except that some extra steps have been taken to minimize distortion by the use of negative feedback.

b. Mechanical Features. The receiver chassis and power supply are mounted on a vertical rack inside the cabinet. B of figure 118, shows the location of the various units. This mounting offers the same general advantages for maintenance and adjustment as that of the transmitter. The antenna and transmission line are also of the same type used for the transmitter, and the same mechanical considerations apply.

93. Over-all Design and Operating Considerations

At the operating frequencies of the equipment, maximum range is limited more by line-of-sight propagation than by atmospheric noise and similar factors. Since the sets are for point-to-point relay operation rather than general coverage, corner-reflector antennas, which are highly directional, are used. These provide adequate signals to the receiving point, and eliminate the noise and interference from other directions. The size, weight, and power drain permissible are much greater than for airborne equipment capable of the same power. Because of this, the mechanical and electrical design is rugged, and all units are operated well below their maximum ratings. This is desirable, because service conditions may vary widely, and the operational life should be reasonably long. Since the equipment is required to operate for relatively long periods with a minimum of attention, reliability based on stability and conservative operating voltages and currents has been given careful attention.

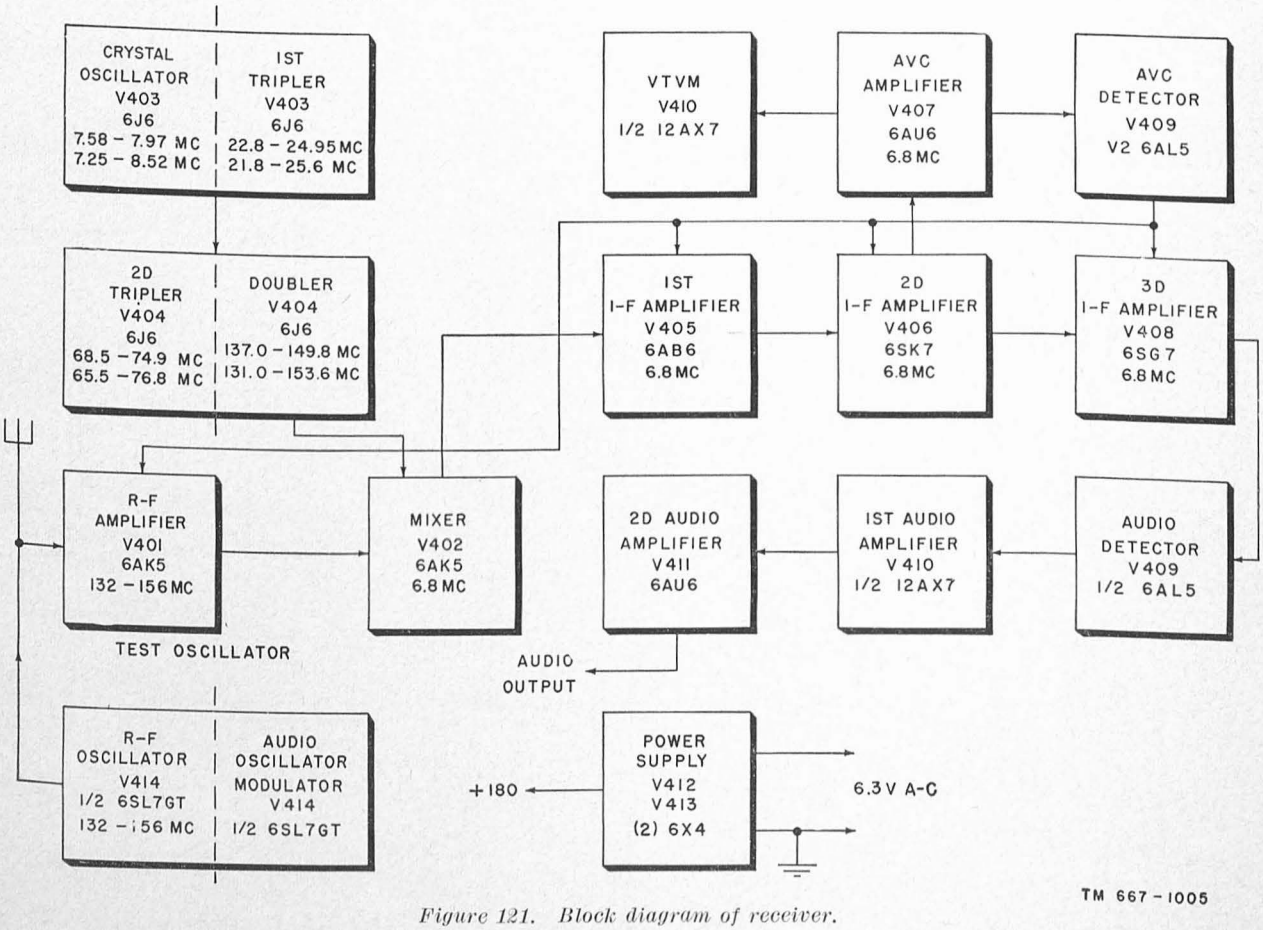

Figure 121. Block diagram of receiver.

94. Summary

a. The main function of any radio set is the transmission or reception of information by radio waves.

b. Since any information capable of being converted into equivalent electrical impulses can be transmitted and received, radio communication is extremely flexible and versatile.

c. Design of practical radio equipment is governed by bandwidth, maximum range, permissible size, weight, and power drain, service conditions, radiation pattern, operational life expectancy, and reliability.

d. The basic units of a typical transmitter are:

(1) A transducer unit, which converts the information to be transmitted to an electrical impulse which is in some way proportional to the information itself.

(2) An amplifier-modulator stage, in which the radio-frequency energy is amplified and varied by the output of the transducer in a way that corresponds closely to the variations of the data.

(3) An oscillator, the source of the r-f power.

(4) An antenna, which radiates the modulated and amplified r-f energy to the receiving point or points.

e. A typical receiver consists of stages which perform the same processes, but in reverse. The basic units are—

(1) Selecting and amplifying circuits, which amplify the r-f current received by the antenna and reject signals of frequencies other than the desired one.

(2) A demodulator, which produces a signal like that of the output of the transducer at the transmitting station.

(3) A transducer, which reproduces the transmitted information in the desired form.

95. Review Questions

a. What is the main function of a radio set?

b. What are some of the more important practical considerations in military applications of radio?

c. What is meant by the term *transducer?*

d. Explain the operation of a vhf radio receiver from antenna to transducer.

e. Explain the operation of a vhf transmitter from transducer to antenna.

INDEX

	Paragraphs	Page
Adjustable-link, coaxial tank circuit	74*c*	98
Advantages of shorter wavelengths	2*b*	2
Amplifiers:		
Bandwidth requirements	46*b*	69
Cascade	46*d*	70
Cascode	52*a*	74
Power	45	69
	53	79
Voltage	45	69
	49	72
Wide-band	46*a*	69
Antennas	85	116
Atmospheric noise	84*c*	116
Attenuation of radio waves	84	116
Back heating of cathode	32*d*	58
Balanced-line section	15*a*	25
Balanced-to-unbalanced coupling	76	100
Balun	18*a*(1)	37
	76*b*	101
Bandwidth	46	69
Bazooka	18*a*(1)	37
Broadbanding	10*d*	15
Butterfly:		
Capacitors	24*a*	46
Oscillator	68	94
Butterfly-tuned circuit	24*c*	46
Capacitive:		
Coupling	75	100
Reactance	9*a*	12
Capacitors:		
At high frequencies	22*b*	44
Butterfly	24	46
Characteristics	22*a*(1)	44
Improvements:		
Fixed	23	45
Variable	24	46
Losses	22*a*(2)	44
Cascode amplifiers	52*d*	74
Cathode:		
Follower	58*d*	83
Lead inductance degeneration	31*b*(2)	56
Ceramic capacitors at high frequency	22*b*(4)	45
Characteristic impedance	14*a*	18
Of matching transformer	15*b*(4)	31
Circuit elements	13	18
Closed-end stub	17*b*(1)	34
Coaxial-line:		
Oscillator	66	92
Section:		
Comparison with two-wire section	15*a*(6)	29
Coaxial-line—Continued		
Section—Continued		
Impedance	15*a*(4)	28
Ratio of diameter	15*a*(4)	28
Tuning methods	15*a*(2)(*b*)	26
Colpitts oscillator	31*b*(1)	56
Commercial and military frequencies, FCC		4
Communications requirements	88	119
Component efficiency in oscillators	61*c*	86
Converting from balanced to unbalanced impedance	18*a*	36
Coupling	71	97
Resonant-line sections	15*a*(3)	27
Crystal oscillator	62*b*	87
Design factors:		
Capacitors:		
Fixed	23	45
Variable	24	46
Inductors	25*f*	49
Resistors	26	51
Dielectric:		
Hysteresis loss	36	61
Losses:		
Component parts	27*a*	53
Vacuum tubes	36	61
Diffraction of radio waves	82	109
Direct radiation in vacuum tubes	38	62
Distributed:		
Constants	7	9
Inductance	8	9
Properties	7	9
Resistance	10	14
Distributed capacitance:		
Definition	9*a*	12
Desirable effects	9*c*	13
Undesirable effects	9*b*	13
Double stub matching	17*b*(2)	36
Driving-power requirements, triode	54*c*	79
Duct conditions	83*c*(3)	113
Electrolytic capacitors at high frequencies	22*b*(1)	45
Factors affecting radio communication	88*b*	119
Fading of radio waves	84*b*	116
Field relationships of radio waves	79*b*	103
Figure of merit	33*c*	60
Filament-type resistors	26*a*(3)	51
Frequency stability, overtone oscillators	62*c*(3)	88
Gain-bandwidth product	50*d*	73
Getters	39*a*	62

	Paragraphs	Page
Ghosts	81b(4)	108
Grid:		
Emission	39b	62
Gas current	39	62
Grid-plate capacitance, triodes	33a(2)	59
Grid-separation triode amplifiers	58c	82
Ground-reflection effects	81b	107
Ground wave	80b	105
Grounded-grid triode amplifiers	52e	74
Half-power points	46a	69
Half-wave:		
Frame	18e	39
Line section:		
Resonant	15b(1)	29
Transformer, 1:1	18b	38
Harmonic:		
Oscillators	62b	89
Suppression	16	33
Hartley oscillator	15b(2)	30
Heat radiation in vacuum tubes	39c	63
Historical background, vhf and uhf	3	4
Impedance:		
And Q	15a(4)	28
Characteristics	14a	18
Circuit elements	13a(2)	18
Distributed:		
Capacitances	9b	13
Inductances	8b	10
Matching	15a(3)	27
Transformer	15b(4)	31
	17b(3)	36
Vacuum tube circuits	15b(1)	34
Input	33a	58
Output	33b	60
Improvements:		
Fixed capacitors	23a	45
Variable capacitors	24	46
Induced currents in tube shields	8d	11
Inductive coupling	8d	11
Methods	74	98
Inductors:		
Characteristics	25a	47
Design factors	25f	49
Frequency of maximum Q	25b	47
Self-resonance	25c	48
Input:		
Capacitance, vacuum-tube	31a(1)	55
Conductance, vacuum-tube	33a(1)	58
Impedance, vacuum-tube	33a	58
Resistance, vacuum-tube	33a(1)	58
Invar	25g(2)	50
Ionosphere	1b	1
Isolating circuit for dc	72	97
Lighthouse-tube oscillator	66	92
Limitations of vacuum tubes	61c	86
Line-matching stubs	17b(1)	34
Line-of-sight distance	80d	105
Line sections:		
Balanced	15a	25
Coaxial	15a(2)(b)	26
Line sections—Continued		
Converting from balanced to unbalanced impedance	18a	36
Effect of tuning	14d	22
Electrical length	14g	22
Energy storage	18f	40
Half-wave	18b	38
Parallel tank circuits	14h, 15	23, 25
Phase shifter	18d	38
Principles	14	18
Reactance	17	34
Series resonant	16	33
Switching	18g	40
Time delay	18c	38
Unbalanced	15a	25
Uses	13b	18
Link coupling	8d	11
Litz wire	10b	14
Lobe structure	81b	107
Losses:		
Distributed:		
Capacitance	9a	12
Inductance	8b	10
Lumped properties:		
Advantages	21b	43
Components	21a	43
Disadvantages	21c	43
Pentode amplifiers	58a	80
Upper frequency limit	21d	43
Magnetic field about conductor	8a	9
Matching impedance	15a(3)	27
Metallic insulators	15b(3)	30
Mica capacitors at high frequency	22b(3)	45
Miniature pentodes	42	67
Multipath interference	81b(4)	108
Mutual inductance	8d	11
Natural obstacles to propagation	82c	110
Neutralized push-pull triode amplifier	52c	75
Noise figure	50b	73
	51	74
Oscillators:		
Butterfly	68	94
Colpitts	31b(1)	56
Crystal	62b	87
Hartley	15b(2)	30
Lighthouse	66	92
Overtone	62c	87
Ring	67	93
Theory	61	86
TPTG	63	89
Tuned-grid, tuned-cathode	64	91
Output:		
Capacitance, vacuum-tube	31a(1)	55
Impedance, vacuum-tube	33b	60
Overtone oscillator	62c	87
Paper capacitors at high frequency	22b(2)	45
Parallel-resonant tank circuits	15	25
Pentode i-f amplifier	52b	74
Pentodes, miniature	42	67

	Paragraphs	Page
Percentage:		
Bandwidth	46*a*	69
Stability of oscillators	61*b*	86
Phase shifter, line-section	18*d*	38
Plate-current factors	32*b*	58
Plate-operating efficiency	54*d*	79
Polarization of radio waves	79*c*	103
Power amplifiers	45, 53	69, 79
Above 450 mc	57	80
Below 450 mc	56	80
Practical	58	80
Power gain	54*b*	79
Practical inductors	25*g*	50
Propagation	80	103
Quarter-wave line sections:		
Advantages	15*a*(5)	29
Matching transformer	15*b*(4)	31
Metallic insulator	15*b*(3)	30
Series resonance	16	33
Quasi-optical waves	80*d*	105
Radiation losses	80*c*	105
Radio:		
Horizon	80*d*	105
Shadow region	82*a*	109
Ratio of diameters, coaxial line	15*a*(4)	28
Reactance:		
Limiting tube gain	33*c*	60
Line-section	17	34
Receiver:		
Characteristics	92	121
Equipment functions	89*b*	120
Reciprocity principle of antennas	85*c*	116
Reducting tube reactances	34	61
Reflected waves	80*c*, 81	105, 106
Reflection:		
Coefficient	14*d*	22
Of radio waves	2*b*(2)	2
Refraction of radio waves	83	111
Refractive index	83*b*	111
Gradient conditions	83*c*	112
Resistance ratio	10*c*	15
Resistors at high frequency	26	51
Resonance:		
Vacuum-tube leads	31*b*(1)	56
With distributed capacitance	9*c*	13
With distributed inductance	8*c*	11
R-f resistance	10*a*	14
Component parts	27*b*	53
Ring oscillator	67	93
Scope of manual	4	7
Screen-grid tubes	32*c*	58
Self-resonance:		
Capacitors	22*a*(2)	44
Inductors	25	47
Series-resonant line sections	16	33
Silver-plating conductors	10*b*	14
Skin effect:		
Definition	10*a*	14
Desirable effects	10*d*	15
Skin effect—Continued		
Minimizing	10*b*	14
Undesirable effects	10*c*	15
Vacuum-tube leads	30*b*, 37	55, 62
Sky wave	80*b*	105
Slug tuning	25*q*(2)	50
Spacing of two-wire conductors	15*a*(2)(*b*)	26
Special resistors	25*b*	47
Stability of oscillators	61*b*	86
Stagger tuning	46*d*	70
Standard atmospheric conditions	83*b*	111
Standing-wave ratio	14*d*	22
Stubs:		
Double	17*b*(2)	36
Impedance-transformer	17*b*(3)	36
Line-matching	17*b*(1)	34
Substandard layer	83*d*(3)	113
Surface leakage in component parts	27*b*	53
Surge impedance	14*a*	18
Switching functions of line sections	18*g*	40
Tables:		
Circuit		21
Commercial and military frequencies, FCC		6
Duct height and wavelength		113
Time-delay line sections	18*c*	38
TPTG oscillator	63	89
Transformer:		
Half-wave, 1:1	18*b*	38
Impedance matching	15*b*(4), 17*b*(3)	31, 34
Transit time	32, 35	57, 61
Transmission lines	14	18
Transmitter:		
Characteristics	91	121
Equipment functions	89*a*	119
Trapping	83*c*(2), 83*e*	113
Triodes:		
Driving-power requirements	54*c*	79
In amplifiers	48*c*	72
Miniature	41*a*	63
Pentodes connected as triodes	41*c*	67
Twin	41*b*	66
Voltage-gain	50*b*	73
Tuned-grid, tuned-cathode oscillator	64	91
Tuned-link coupling, linear tank circuit	74	98
Two-wire line sections:		
Comparison with coaxial line section	15*a*(6)	29
Spacing	15*a*(2)(*b*)	26
Uhf radio	2	1
Historical background	3	4
Unbalanced line sections	15*a*	25
Upper frequency limit, lumped components	21*d*	43
Vacuum tubes:		
Dielectric losses	36	61
Gain	33	58
Impedance	33	58
Interelectrode capacitance	31	55
Limitations	61*c*	86

	Paragraphs	Page
Vucuum tubes—Continued		
Miniature:		
Pentodes	42	67
Triodes and triode connected pentodes	41*a*	63
Twin triodes	41*b*	66
Miniaturization	35	61
Plate-operating efficiency	54*d*	79
Power gain	54c	79
Skin effect	37	62
Velocity:		
Factor	14*g*	22
Wave in solid dielectric	14*g*	22
Vhf radio	2	1
Historical background	3	4
Voltage:		
Amplifier	45, 49	69, 72
Gain	50	73
Wavelength relationship to physical size	2*b*(3)	4
Wide-band amplifier	46*a*	69