TM 11-5820-894-24P

TECHNICAL MANUAL

ORGANIZATIONAL, DIRECT SUPPORT, AND GENERAL SUPPORT MAINTENANCE REPAIR PARTS AND SPECIAL TOOLS LISTS (INCLUDING DEPOT MAINTENANCE REPAIR PARTS AND SPECIAL TOOLS) FOR

RADIO TERMINAL SET AN/TRC-151(V)

(NSN 5820-00-006-1831)

HEADQUARTERS, DEPARTMENT OF THE ARM
26 OCTOBER 19

TECHNICAL MANUAL
No. 11-5820-894-24P

HEADQUARTERS
DEPARTMENT OF THE ARMY
WASHINGTON, DC, *26 October 1982*

ORGANIZATIONAL, DIRECT SUPPORT AND GENERAL SUPPORT MAINTENANCE REPAIR PARTS AND SPECIAL TOOLS LIST (INCLUDING DEPOT MAINTENANCE REPAIR PARTS AND SPECIAL TOOLS)

FOR

RADIO TERMINAL SET AN/TRC-151(V)

(NSN 5820-00-006-1831)

Current as of 8 June 1982

REPORTING ERRORS AND RECOMMENDING IMPROVEMENTS

You can help improve this manual. If you find any mistakes or if you know of a way to improve the procedures, please let us know. Mail your letter, DA Form 2028 (Recommended Changes to Publications and Blank Forms), or DA Form 2028-2 located in the back of this manual direct to: Commander, US Army Communications-Electronics Command and Fort Monmouth, ATTN: DRESL-ME-MP, Fort Monmouth, New Jersey 07703.

In either case, a reply will be furnished direct to you.

TABLE OF CONTENTS

SECTION I

INTRODUCTION

1. Scope

This manual lists spares and repair parts; special tools; special test, measurement, and diagnostic equipment (TMDE), and other special support equipment required for performance of organizational, direct support, and general support maintenance of the AN/TRC-151(V). It authorizes the requisitioning and issue of spares and repair parts as indicated by the source and maintenance codes.

2. General

This Repair Parts and Special Tools List is divided into the following sections:

a. Section II. Repair Parts List. A list of spares and repair parts authorized for use in the performance of maintenance. The list also includes parts which must be removed for replacement of the authorized parts. Parts lists are composed of functional groups in numeric sequence, with the parts in each group listed in figure and item number sequence.

b. Section III. Special Tools List. Not applicable.

c. Section IV. National Stock Number and Part Number Index. A list, in National item identification number (NIIN) sequence, of all National stock numbers (NSN) appearing in the listings, followed by a list, in alphameric sequence, of all part numbers appearing in the listings. National stock numbers and part numbers are cross-referenced to each illustration figure and item number appearance.

3. Explanation of Columns

a. Illustration. This column is divided as follows:

(1) *Figure number.* Indicates the figure number of the illustration on which the item is shown.

(2) *Item number.* The number used to identify item called out in the illustration.

b. Source, Maintenance, and Recoverability (SMR) Codes.

(1) *Source code.* Source codes indicate the manner of acquiring support items for maintenance, repair, or overhaul of end items. Source codes are entered in the first and second positions of the Uniform SMR Code format as follows:

Code	*Definition*
PA	Item procured and stocked for anticipated or known usage.
PB	Item procured and stocked for insurance purpose because essentiality dictates that a minimum quantity be available in the supply system.
PD	Support item, excluding support equipment, procured for intitial issue or outfitting and stocked only for subsequent or additional initial issue or outfittings. Not subject to automatic replenishment.
XA	Item is not procured or stocked because the requirements for the item will result in the replacement of the next higher assembly.
XB	Item is not procured or stocked. If not available through salvage, requisition.
XD	A support item that is not stocked. When required, item will be procured through normal supply channels.

NOTE

Cannibalization or salvage may be used as a source of supply for any items source coded above except those coded XA and aircraft support items as restricted by AR 700-42.

(2) *Maintenance code.* Maintenance codes are assigned to indicate the levels of maintenance authorized to USE and REPAIR support items. The maintenance codes are entered in the third and fourth positions of the Uniform SMR Code format as follows:

(a) The maintenance code entered in the third position will indicate the lowest maintenance level authorized to remove, replace, and use the support item. The maintenance code entered in the third position will indicate one of the following levels of maintenance:

Code	*Application/Explanation*
O	Support item is removed, replaced, used at the organizational level.
F	Support item is removed, replaced, used at the direct support level.

(b) The maintenance code entered in the

fourth position indicates whether the item is to be repaired and identifies the lowest maintenance level with the capability to perform complete repair (i.e., all authorized maintenance functions). This position will contain one of the following maintenance codes:

Code	*Application/Explanation*
F	The lowest maintenance level capable of complete repair of the support item is the direct support level.
H	The lowest maintenance level capable of complete repair of the support item is the general support level.
D	The lowest maintenance level capable of complete repair of the support item is the depot level.
Z	Nonreparable. No repair is authorized.

(3) *Recoverability code.* Recoverability codes are assigned to support items to indicate the disposition action on unserviceable items. The recoverability code is entered in the fifth position of the Uniform SMR Code format as follows:

Recoverability codes	*Definition*
Z	Nonreparable item. When unserviceable, condemn and dispose at the level indicated in position 3.
F	Reparable item. When uneconomically reparable, condemn and dispose at the direct support level.
H	Reparable item. When uneconomically reparable, condemn and dispose at the general support level.
D	Reparable item. When beyond lower level repair capability, return to depot. Condemnation and disposal not authorized below depot level.

c. National Stock Number. Indicates the National stock number assigned to the item and will be used for requisitioning purposes.

d. Federal Supply Code for Manufacturer (FSCM). The FSCM is a 5-digit numeric code listed in SB 708-41/42 which is used to identify the manufacturer, distributor, or Government agency, etc.

e. Part Number. Indicates the primary number used by the manufacturer (individual, company, firm, corporation, or Government activity), which controls the design and characteristics of the item by means of its engineering drawings, specifications, standards, and inspection requirements to identify an item or range of items.

NOTE

When a stock numbered item is requisitioned, the repair part received may have a different part number than the part being replaced.

f. Description. Indicates the Federal item name and, if required, a minimum description to identify the item.

g. Unit of Measure (U/M). Indicates the standard of the basic quantity of the listed item as used in performing the actual maintenance function. This measure is expressed by a two-character alphabetical abbreviation (e.g., ea, in, pr, etc). When the unit of measure differs from the unit of issue, the lowest unit of issue that will satisfy the required units of measure will be requisitioned.

h. Quantity Incorporated in Unit. Indicates the quantity of the item used in the breakout shown on the illustration figure, which is prepared for a functional group, subfunctional group, or an assembly. A "V" appearing in this column in lieu of a quantity indicates that no specific quantity is applicable, (e.g., shims, spacers, etc).

4. Special Information

a. The following publication pertains to the AN/TRC-151(V) and its components:

TM 11-5820-894-14, Radio Terminal Set, AN/TRC-151(V) (To be published).

b. National stock numbers (NSN's) that are missing from P source coded items have been applied for an will be added to this TM by future change/revision when they are entered in the Army Master Data File (AMDF). Until the NSN's are established and published, submit exception requisitions to: Commander, US Army Communications-Electronics Command and Fort Monmouth, ATTN: DRSEL-MM, Fort Monmouth, New Jersey 07703 for the part required to support your equipment.

5. How to Locate Repair Parts

a. When National stock number or part number is unknown.

(1) *First.* Using the table of contents, determine the functional group within which the item belongs. This is necessary since illustrations are prepared for functional groups and listings are divided into the same groups.

(2) *Second.* Find the illustration covering the functional group to which the item belongs.

(3) *Third.* Identify the item on the illustration and note the illustration figure and item number of the item.

(4) *Fourth.* Using the Repair Parts Listing, find the figure and item number noted on the illustration.

b. When National stock number or part number is known.

(1) *First.* Using the Index of National Stock

Numbers and Part Numbers, find the pertinent National stock number or part number. This index is in NIIN sequence followed by a list of part numbers in alphameric sequence, cross-referenced to the illustration figure number and item number.

(2) *Second.* After finding the figure and item number, locate the figure and item number in the repair parts list.

6. Abbreviations

Not applicable.

(Next printed page is 4.1)

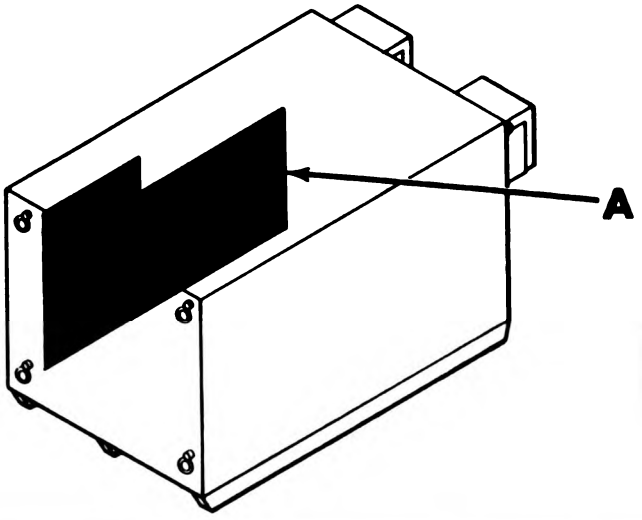

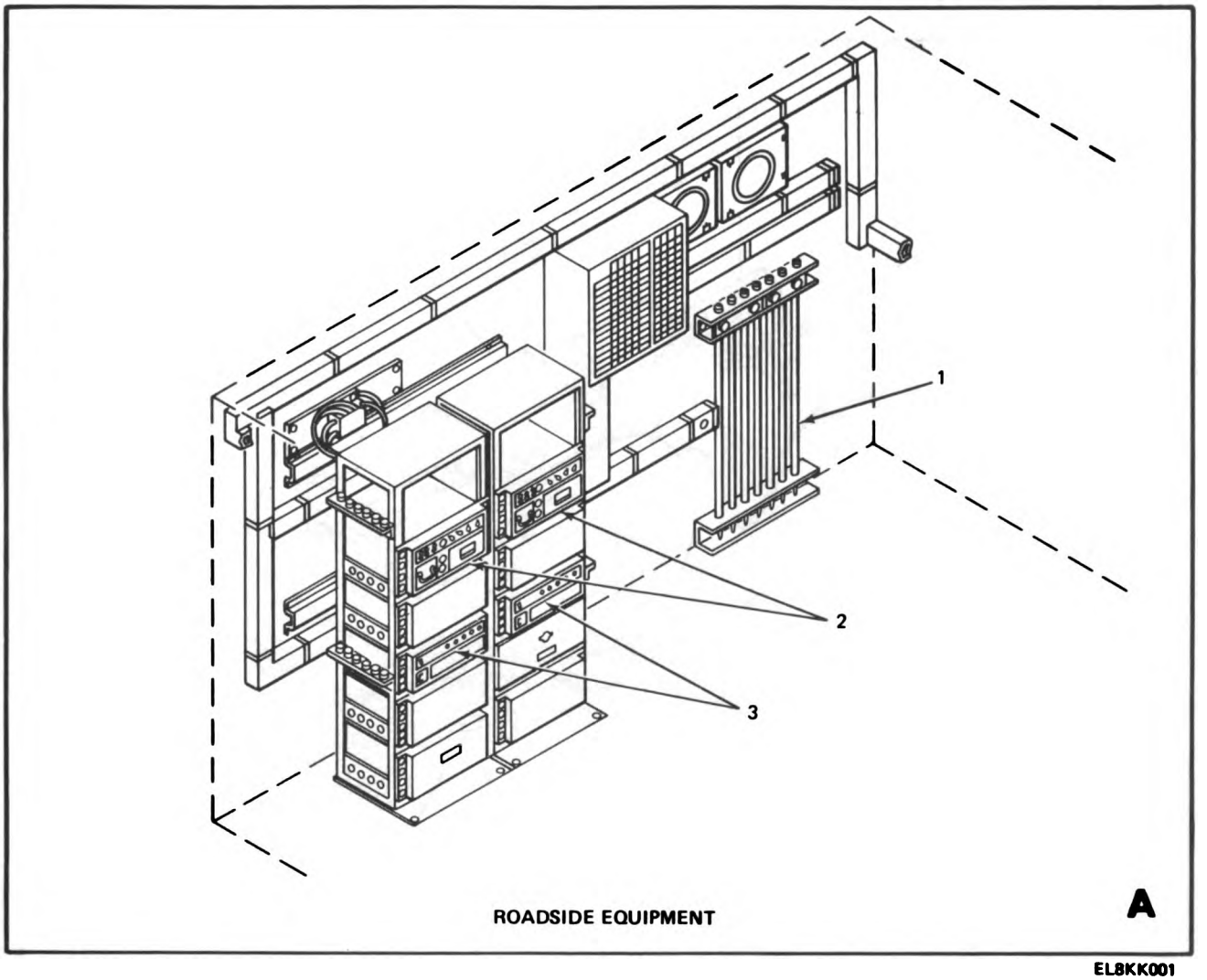

EL8KK001

Figure 1. Radio Terminal Set AN/TRC-151(V) (Sheet 1 of 4).

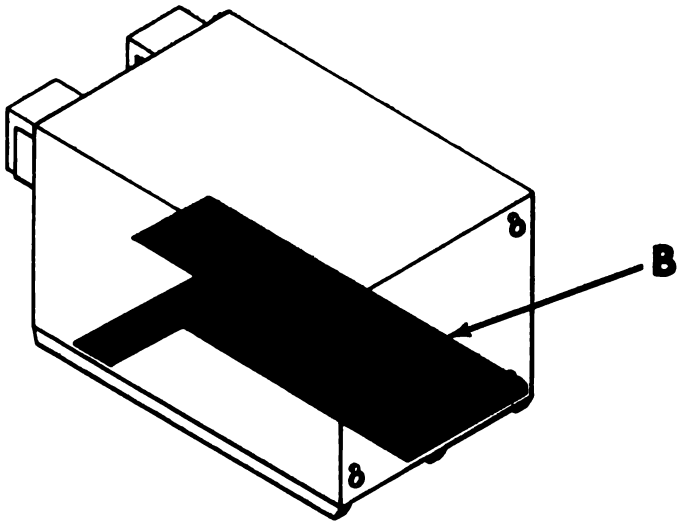

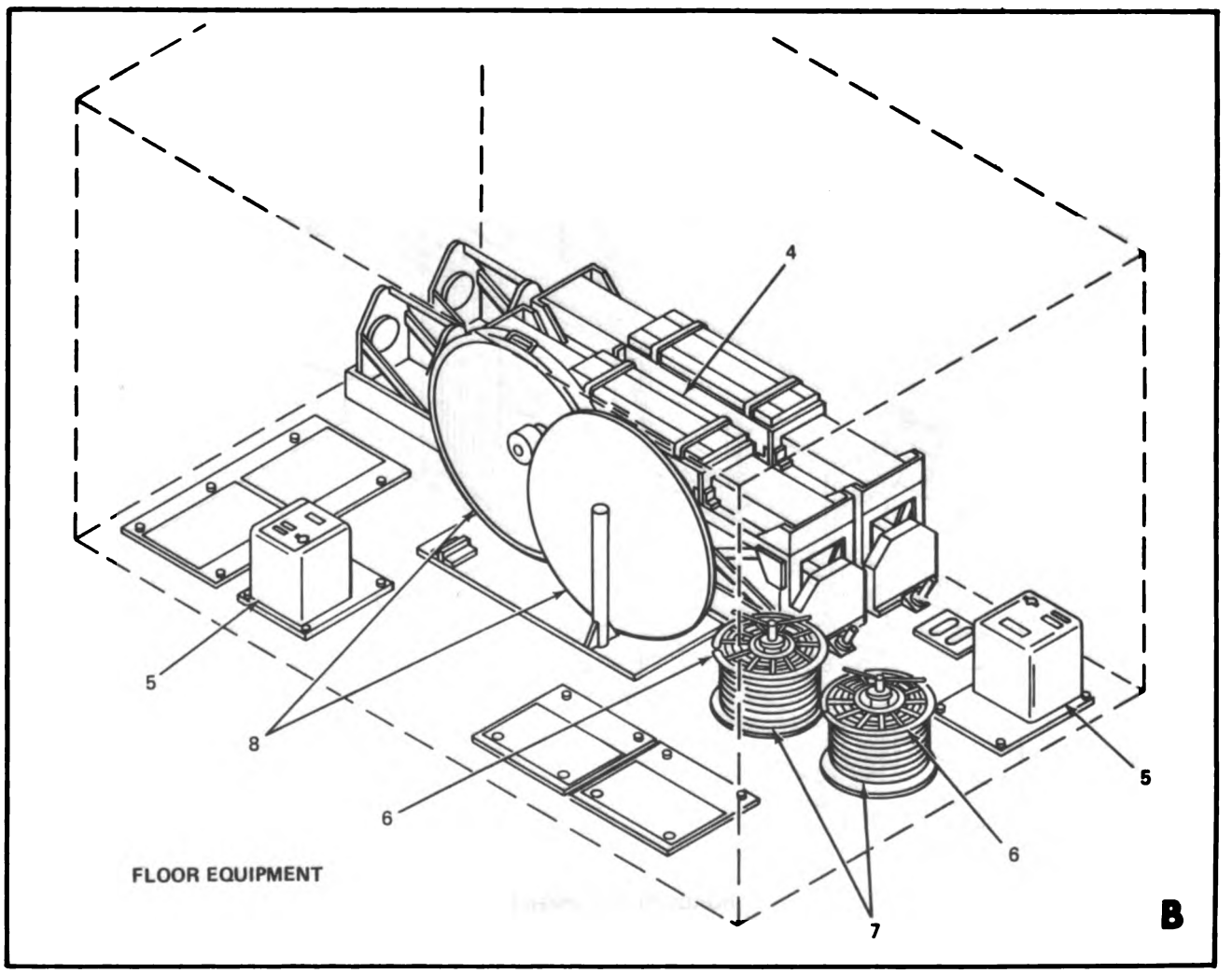

Figure 1. Radio Terminal Set AN/TRC-151(V) (Sheet 2 of 4).

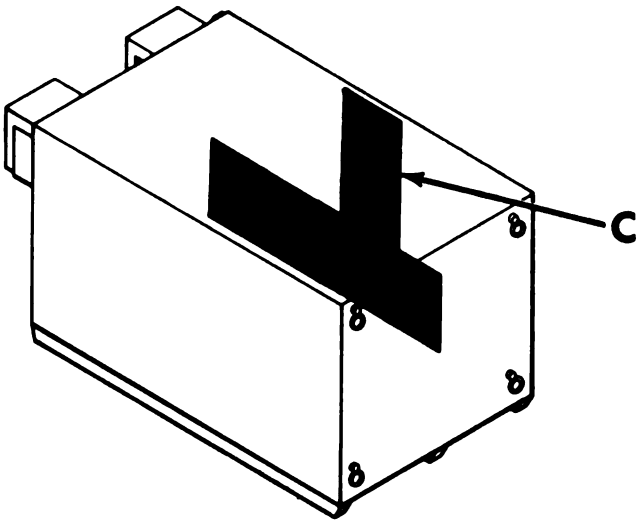

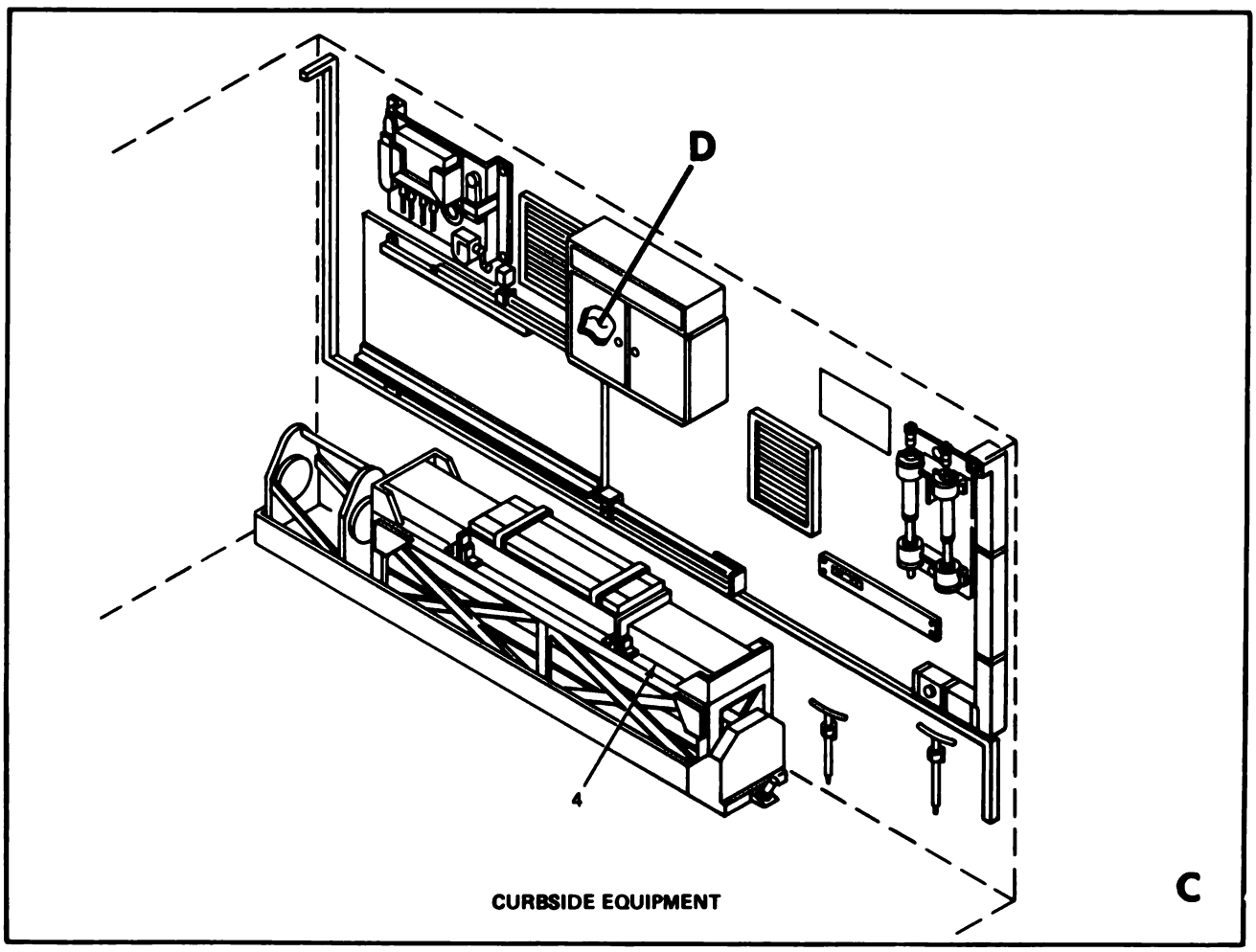

EL8KK003

Figure 1. Radio Terminal AN/TRC-151(V) (Sheet 3 of 4).

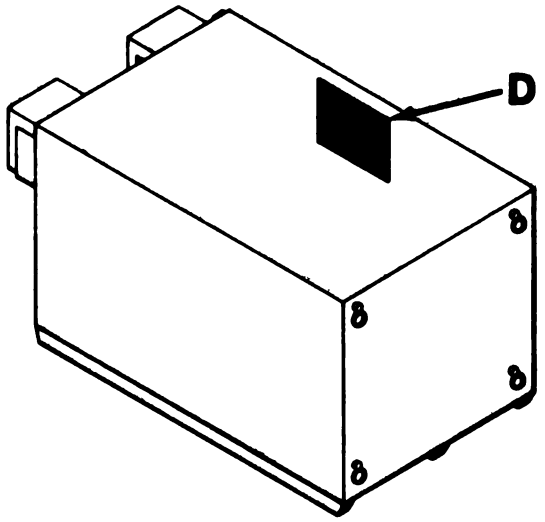

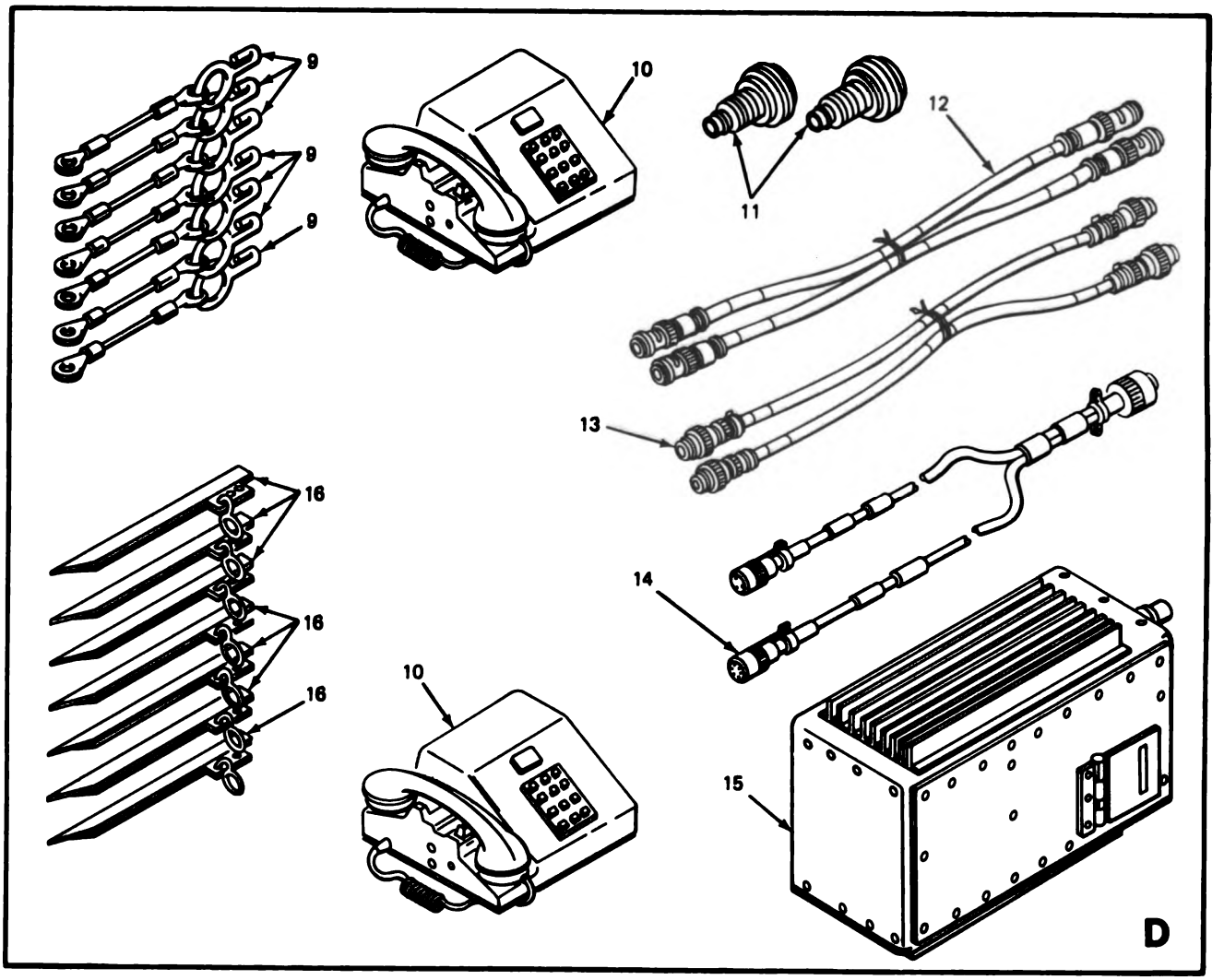

Figure 1. Radio Terminal Set AN/TRC-151(V) (Sheet 4 of 4).

(1) ILLUSTRATION (a) FIG NO.	(b) ITEM NO.	(2) SMR CODE	(3) NATIONAL STOCK NUMBER	(4) FSCM	(5) PART NUMBER	(6) DESCRIPTION / USABLE ON CODE	(7) U/M	(8) QTY INC IN UNIT
						GROUP 00 RADIO TERMINAL SET AN/TRC-151(V)		
1	1	PAOZZ	4030-00-298-1382	80058	GP-113()/G	STAKE,GUY	EA	7
1	2	PDOOO	5805-00-930-8079	80058	TD-660/G	MULTIPLEXER	EA	2
1	3	PDOOO	5805-00-069-8795	80058	CV-1548/G	CONVERTER,TELEPHONE	EA	2
1	4	PAOFF	5820-00-892-3862	80058	AB-577/GRC	MAST	EA	2
1	5	PAOHH	5820-01-110-2205	97403	DL13217E6150	HEATER,ELECTRIC	EA	2
1	6	PAFZZ	8130-00-656-1090	80058	RC-435()/U	REEL,CABLE	EA	3
1	7	PAOHH	5995-00-144-0228	80058	CG-3443/U(80FT)	CABLE ASSY,RAD FREQ	EA	4
1	8	PDOOO	5985-01-080-7917	80058	AS-3047()/GRC-103(V)	ANTENNA	EA	2
1	9	PAOZZ	4030-00-951-4431	78998	H101G	SHACKLE	EA	7
1	10	PDOFF	5965-00-892-3850	81352	H156U	HANDSET	EA	2
1	11	PAFZZ	5935-00-134-5646	96906	MS90579-1375	ADAPTER,CONNECTOR	EA	2
1	12	PAOZZ	5995-00-935-2660	90073	456-095	CABLE ASSY,RAD FREQ	EA	2
1	13	PAOZZ	5995-00-877-6290	80058	CX-10763/GRC-103(V)	CABLE ASSY,SP	EA	2
1	14	PAOZZ	5995-00-144-0282	80058	CX-10879/GRC103V2-6	CABLE ASSY,SP	EA	1
1	15	PDODL	6625-00-179-5217	80058	CV-2500/GR	CONVERTER,WAVE FORM	EA	1
1	16	XBFZZ	5975-00-395-9002	80063	SC-C-66291	CLAMP,GUY STAKE	EA	7

5/(6 BLANK)

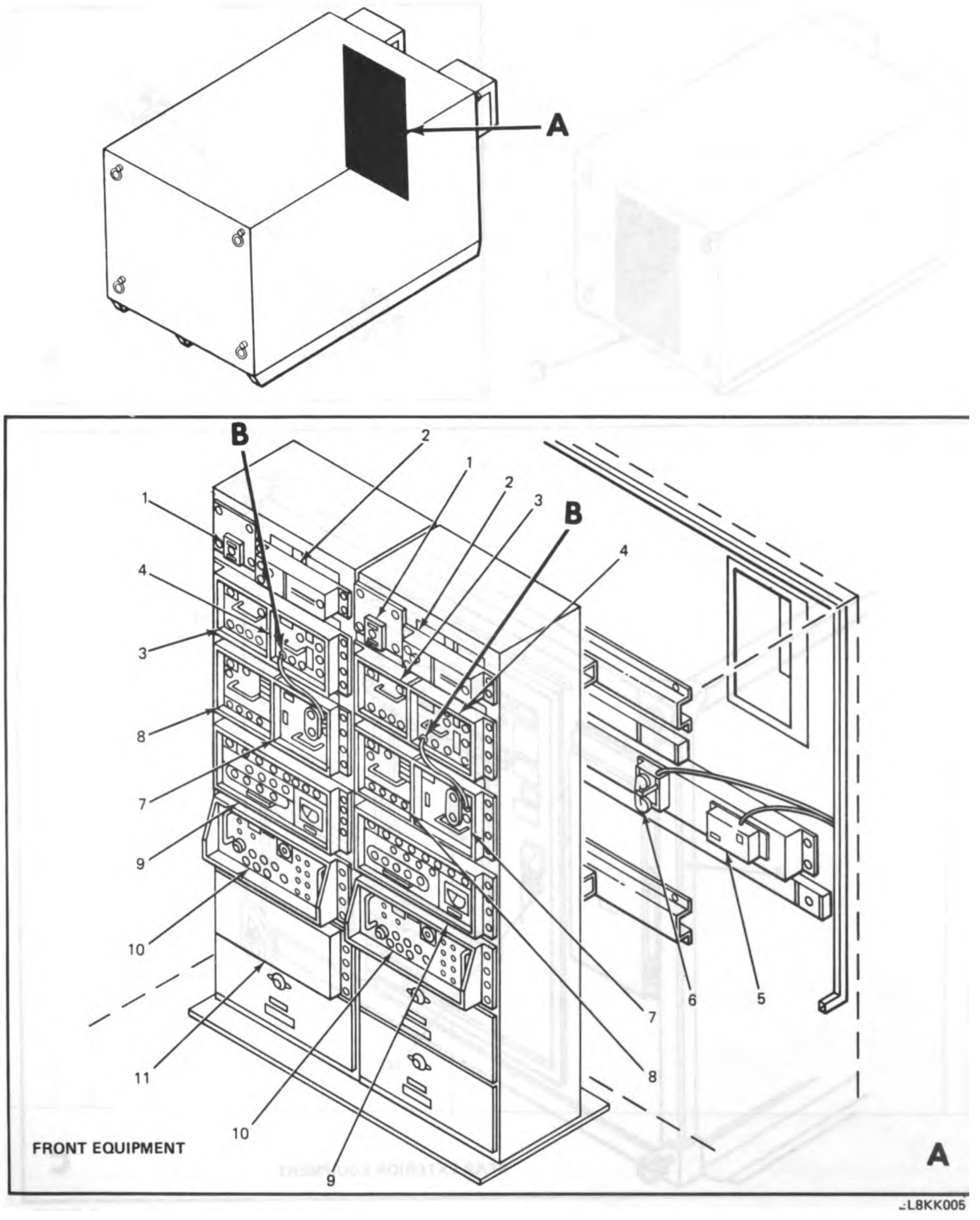

Figure 2. Shelter, Electrical Equipment S-583( )/TRC-151(V) Front and Rear Walls (Sheet 1 of 2).

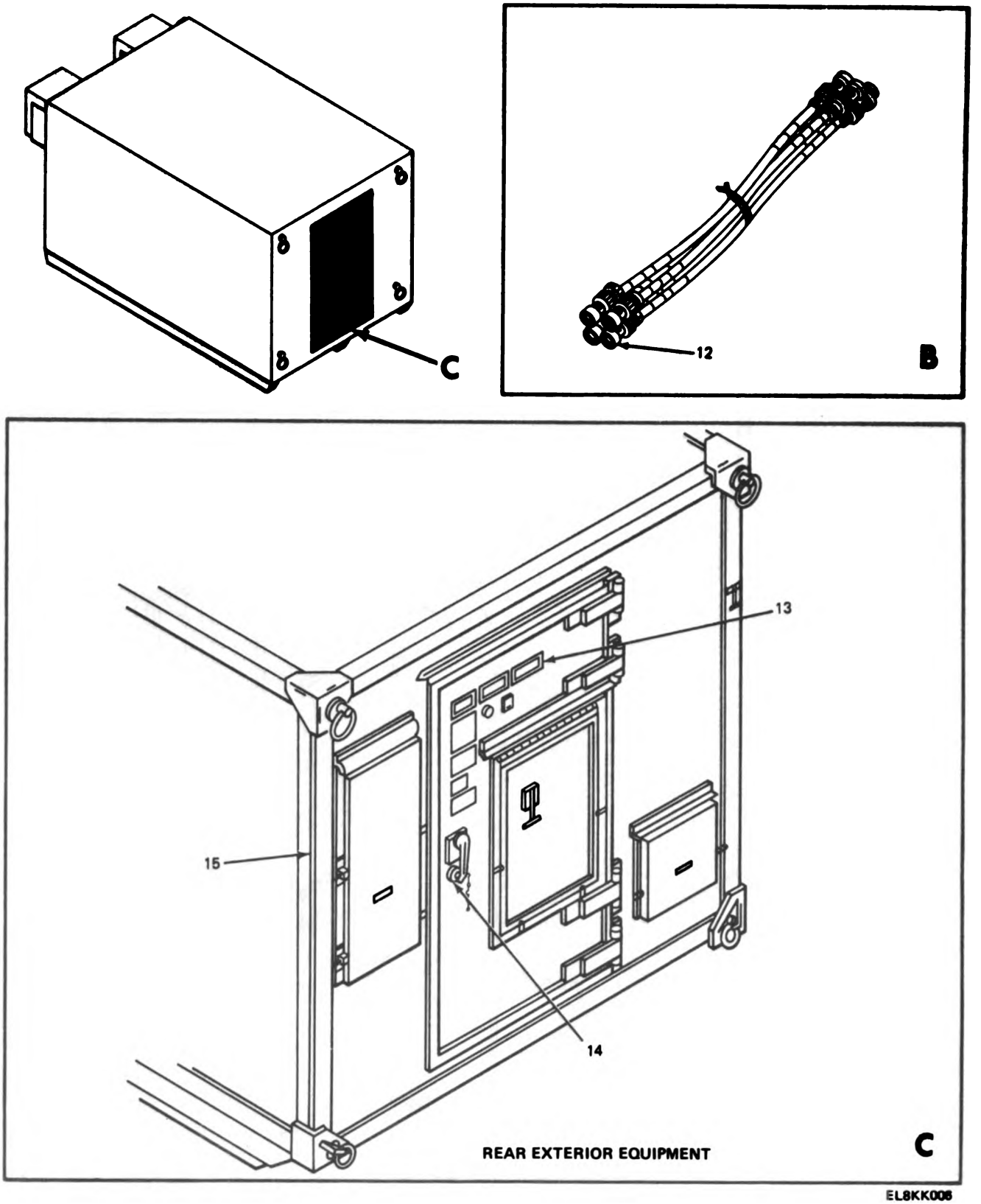

Figure 2. Shelter, Electrical Equipment S-583( )/TRC-151(V) Front and Rear Walls (Sheet 2 of 2).

(1) ILLUSTRATION (a) FIG NO	(b) ITEM NO	(2) SMR CODE	(3) NATIONAL STOCK NUMBER	(4) FSCM	(5) PART NUMBER	(6) DESCRIPTION USABLE ON CODE
2	1	XBFZZ		80058	DA-437()/GRC-103 (V)	LOAD,DUMMY ELECTRIC
2	2	PDDDD	5805-00-878-3539	80058	RT-773()/GRC-103 (V)	RECEIVER-XMTR
2	3	PDDDD	5820-00-824-0831	80058	R-1329(P)()/GRC-103(V)	RECEIVER,RADIO
2	4	PDDDD	5820-01-081-5407	80058	AM-4319()/GRC-103(V)	AMPLIFIER-CONVERTER
2	5	PDDFF	5830-01-008-3126	80058	LS-147(F)/F1	INTERCOMMUNICATION
2	6	PDDFD	5805-00-543-0012	80058	TA-312/PT	TELEPHONE SET
2	7	PDDDD	5820-01-082-0814	80058	AM-4323()/GRC-103(V)	AMPLIFIER-FREQUENCY
2	8	PDDFD	5820-00-824-0830	80058	T-983(P)()/GRC-103(V)	TRANSMITTER,RADIO
2	9	PDDDD	5820-00-930-8078	80058	TD-754/G	MULTIPLEXER
2	10	PDDDD	5805-00-884-2176	80058	TD-202/U	MULTIPLEXER
2	11	XBDFF	5805-00-926-2627	80058	CY-6097/U	CASE,ELEK,EQUP
2	12	PADZZ	5995-00-935-2662	90073	456-250	CABLE ASSY,RAD FREQ
2	13	PADZZ		80063	SC-C-913783	NAMEPLATE
2	14	PADZZ		80063	SC-C-595537	PL AND KEY ASSY
2	15	PDDDD	5411-01-116-7310	80058	S-583()/TRC-151(V)	SHELTER,NONEXPENDAB

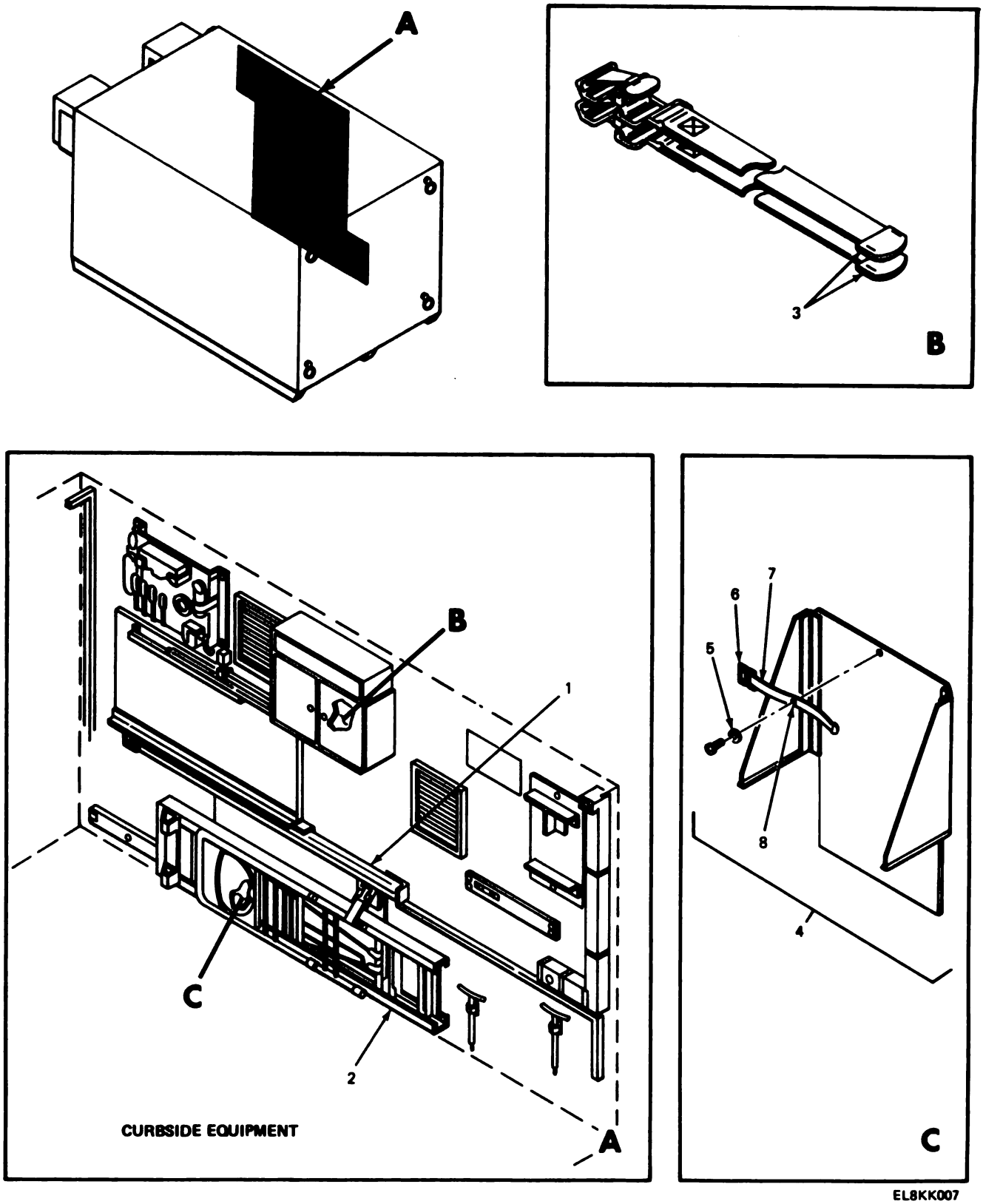

Figure 3. Shelter, Electrical Equipment S-583( )/TRC-151(V) Roadside, Curbside and Floor Installations (Sheet 1 of 3).

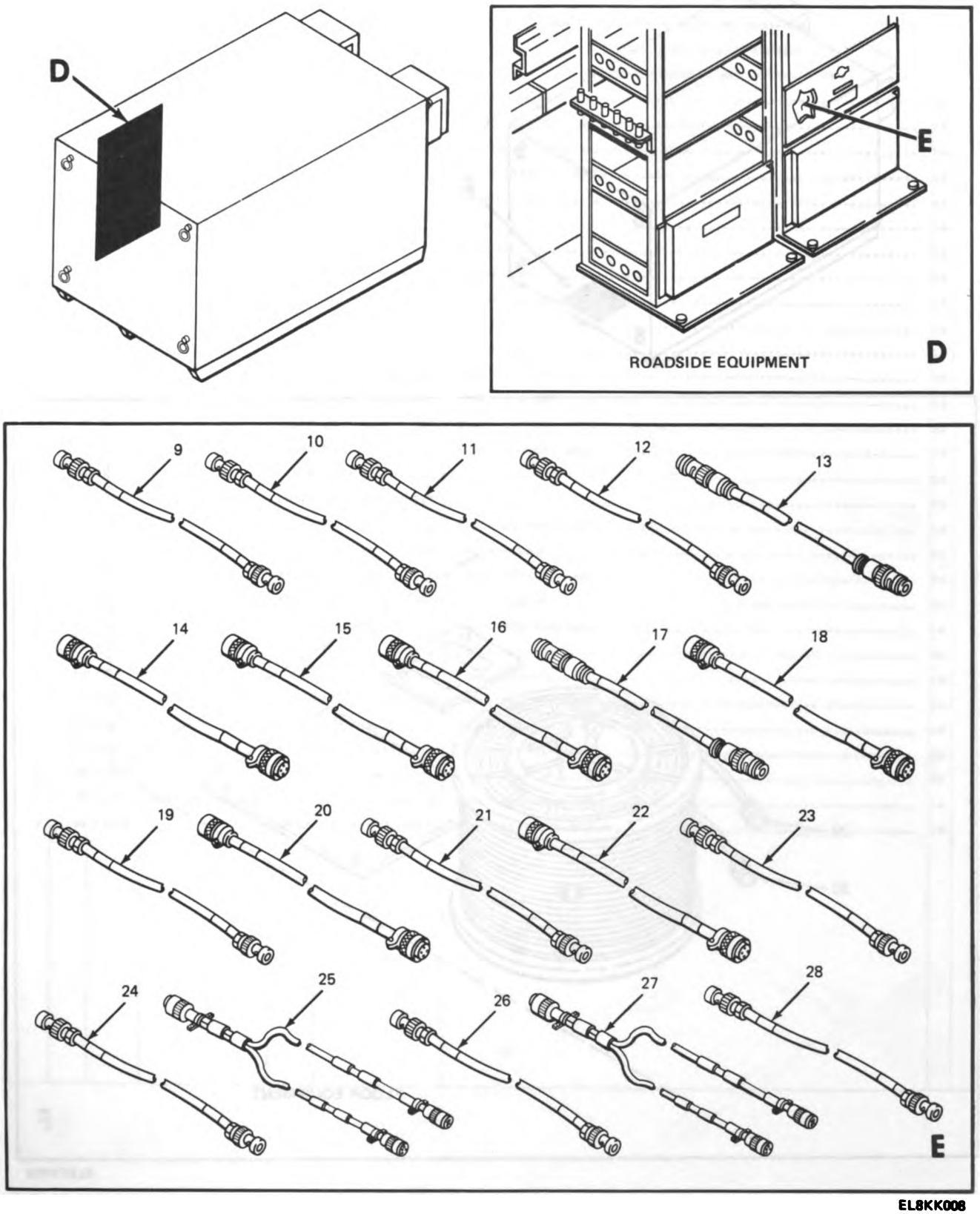

Figure 3. Shelter, Electrical Equipment S-583( )/TRC-151(V) Roadside, Curbside and Floor Installations (Sheet 2 of 3).

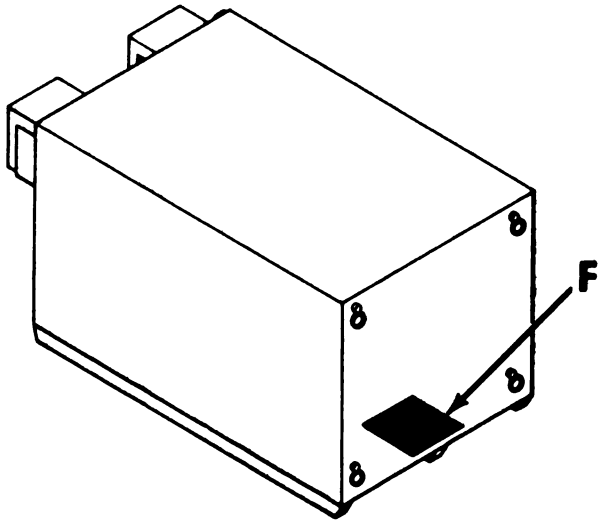

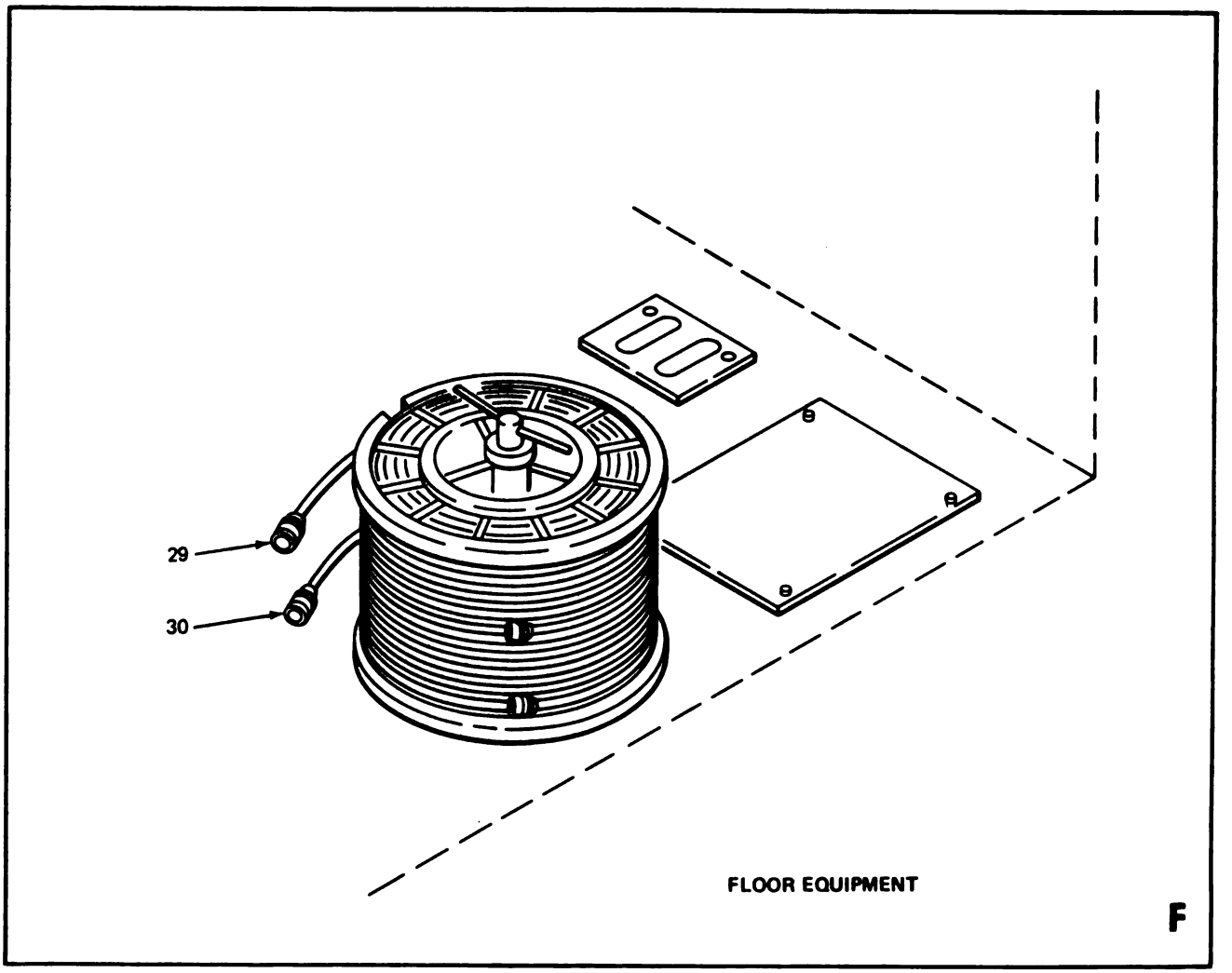

EL8KK009

Figure 3. Shelter, Electrical Equipment S-583( )/TRC-151(V) Roadside, Curbside and Floor Installations (Sheet 3 of 3).

(1) ILLUSTRATION (a) FIG NO.	(b) ITEM NO.	(2) SMR CODE	(3) NATIONAL STOCK NUMBER	(4) FSCM	(5) PART NUMBER	(6) DESCRIPTION USABLE ON CODE	(7) U/M	(8) QTY INC IN UNIT
						GROUP 01 SHELTER,ELECTRICAL EQUIPMENT S-583( )/TRC-151(V)ROADSIDE, CURBSIDE AND FLOOR INSTALLATIONS		
3	1	PAOZZ	5975-00-224-5260	80058	MX-148/G	ROD,GROUND	EA	2
3	2	PAOZZ	2540-00-892-6243	80063	SC-D-108737	LADDER,VEHICLE BOAR	EA	1
3	3	PAOZZ	6150-00-495-1214	80063	SC-B-539492	LEAD,ELECTRICAL	EA	1
3	4	PAOFF		80063	SC-D-914266	SHELF ASSEMBLY,EQUP	EA	1
3	5	XDFZZ	5310-00-014-5850	96906	MS27183-42	WASHER,FLAT	EA	1
3	6	XDFZZ		80063	SC-B-914267	STRAP ASSY	EA	1
3	7	XDFZZ		81349	TYPE IIA	WEBBING	EA	1
3	8	XDFZZ		81349	TYPE III,CL3	GROMMET	EA	1
3	9	PAOFF		80063	SC-D-784101-015	CABLE ASSY,RF	EA	1
3	10	PAOFF		80063	SC-D-784101-010	CABLE ASSY,RF	EA	1
3	11	PAOFF		80063	SC-D-784101-005	CABLE ASSY,RF	EA	1
3	12	PAOFF		80063	SC-D-784101-000	CABLE ASSY,RF	EA	1
3	13	PAOFF		80063	SC-D-784108-005	CABLE ASSY,RF	EA	1
3	14	PAOFF		80063	SC-D-784106-050	CABLE ASSEMBLY,AUD	EA	1
3	15	PAOFF		80063	SC-D-784106-045	CABLE ASSEMBLY,AUD	EA	1
3	16	PAOFF		80063	SC-D-784106-040	CABLE ASSEMBLY,AUD	EA	1
3	17	PAOFF		80063	SC-D-784108-020	CABLE ASSY,RF	EA	1
3	18	PAOFF		80063	SC-D-784106-115	CABLE ASSEMBLY,AUD	EA	1
3	19	PAOFF		80063	SC-D-784101-200	CABLE ASSY,RF	EA	1
3	20	PAOFF		80063	SC-D-784106-120	CABLE ASSEMBLY,AUD	EA	1
3	21	PAOFF		80063	SC-D-784101-205	CABLE ASSY,RF	EA	1
3	22	PAOFF		80063	SC-D-784106-125	CABLE ASSEMBLY,AUD	EA	1
3	23	PAOFF		80063	SC-D-784108-140	CABLE ASSY,RF	EA	1
3	24	PAOFF		80063	SC-D-784108-125	CABLE ASSY,RF	EA	1
3	25	PAOFF		80063	SC-D-913971-002	CABLE ASSY,SP,ELECT	EA	1
3	26	PAOFF		80063	SC-D-784101-190	CABLE ASSY,RF	EA	1
3	27	PAOFF		80063	SC-D-913971-002	CABLE ASSY,SP,ELEC	EA	1
3	28	PAOFF		80063	SC-D-784101-195	CABLE ASSY,RF	EA	1
3	29	PAOFF	5995-00-935-2686	80058	CX-7705A/U(15FT)	CABLE ASSEMBLY,PWR	EA	1
3	30	PAOFF		80058	CX-7453/U(100FT)	CABLE ASSY,PWR,ELEK	EA	1

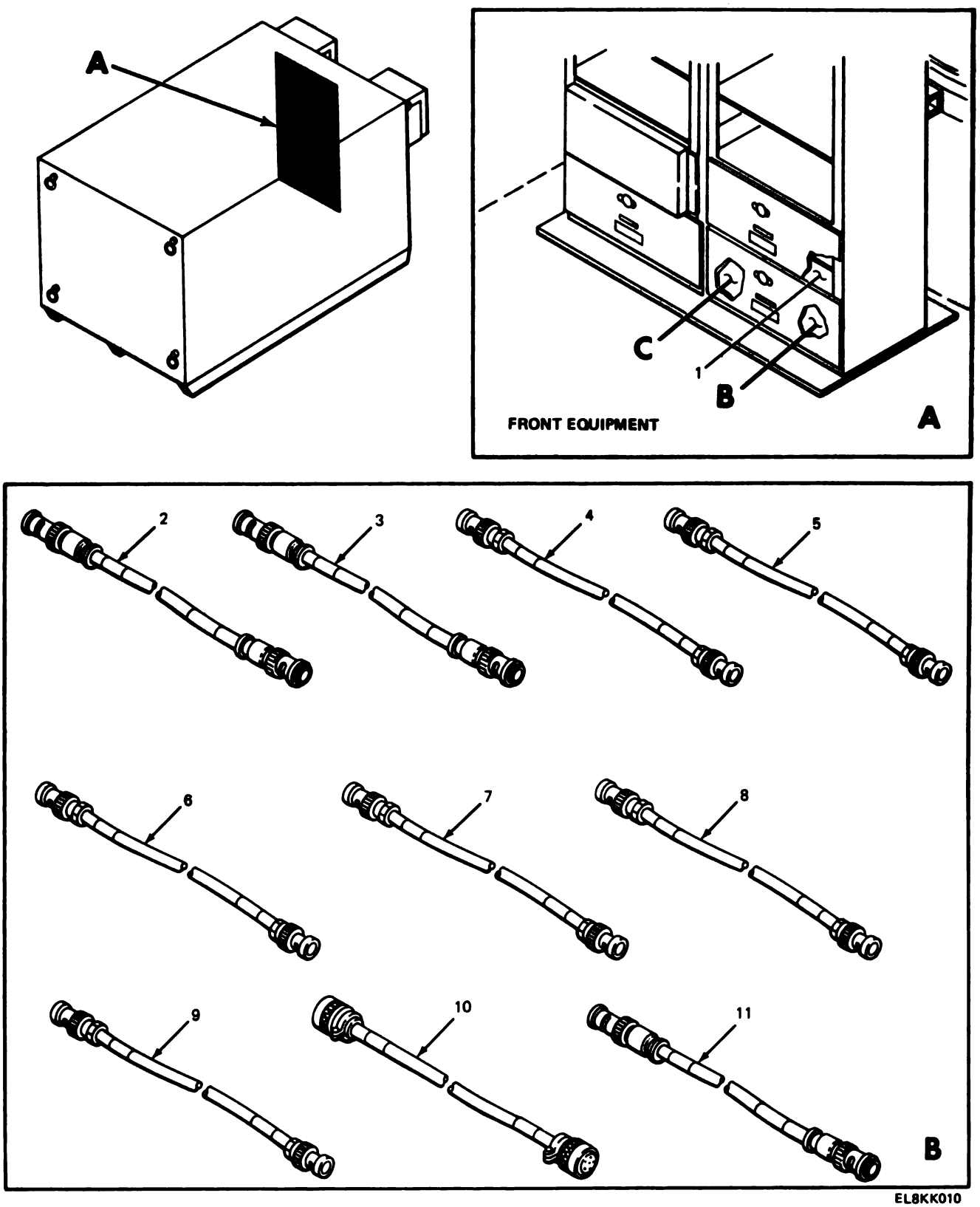

Figure 4. Shelter, Electrical Equipment S-583( )/TRC-151(V) Storage Drawer Assemblies (Sheet 1 of 3).

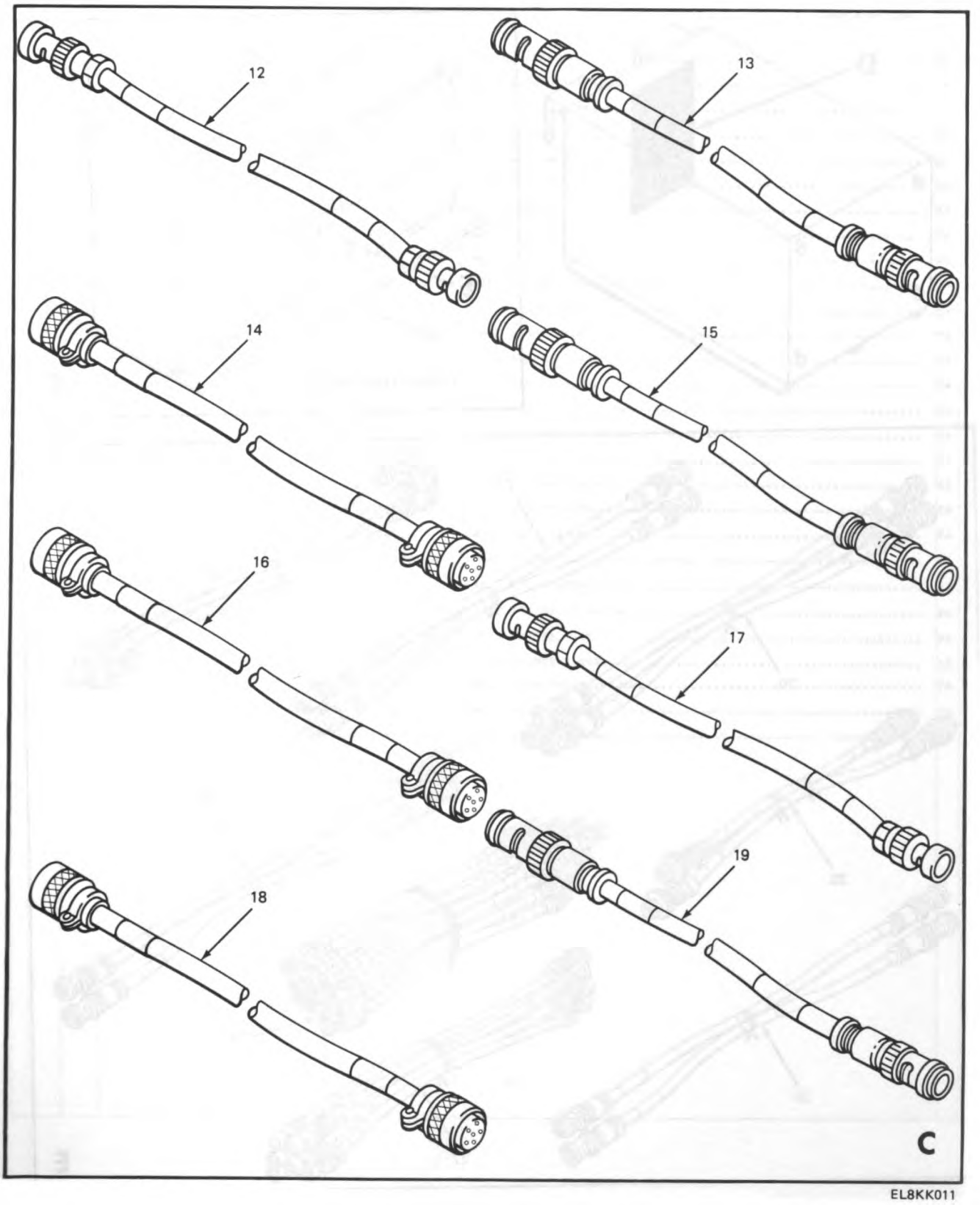

Figure 4. Shelter, Electrical Equipment S-583( )/TRC-151(V) Storage Drawer Assemblies (Sheet 2 of 3).

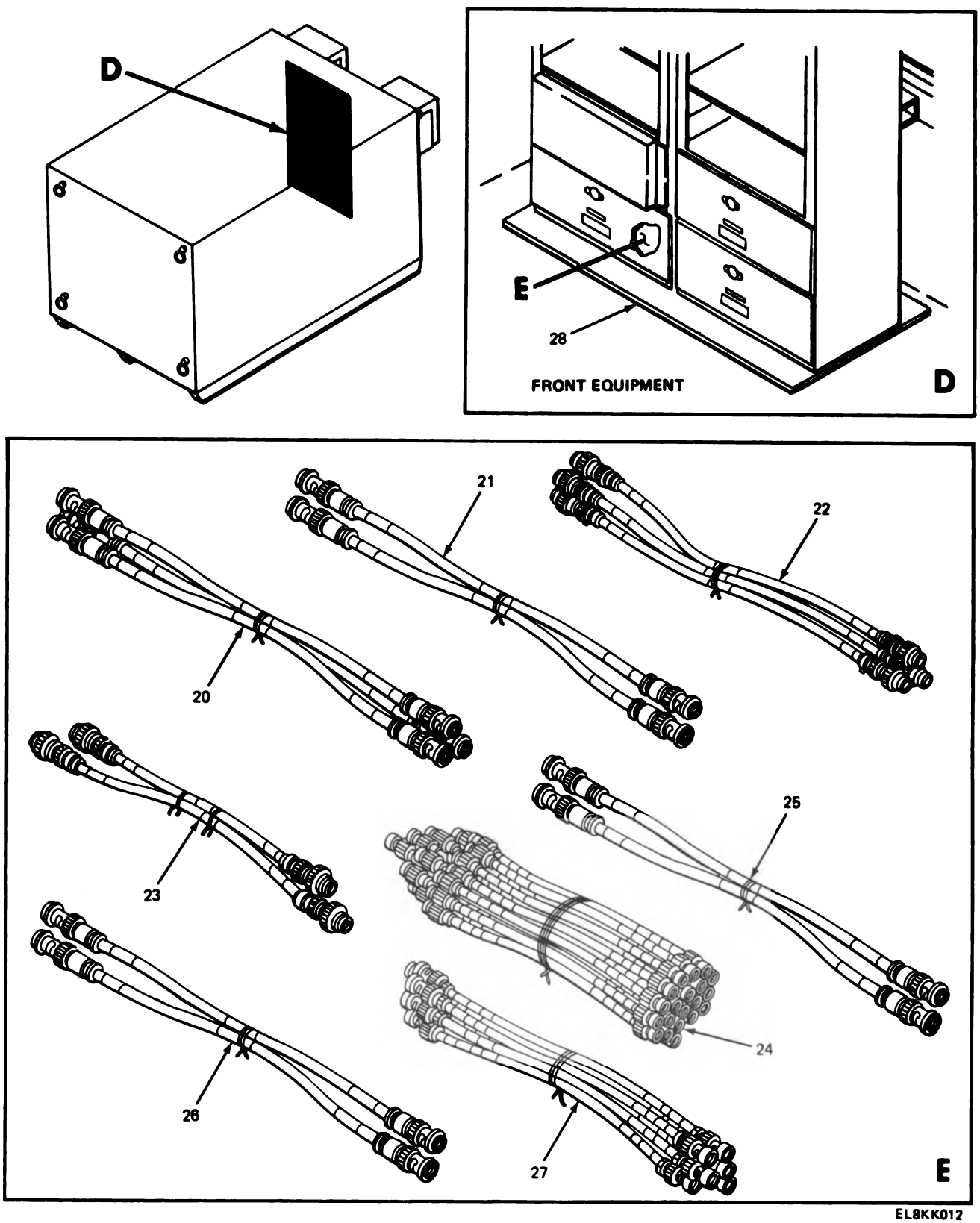

Figure 4. Shelter, Electrical Equipment S-583( )/TRC-151(V) Storage Drawer Assemblies (Sheet 3 of 3).

(1) ILLUSTRATION (a) FIG NO	(b) ITEM NO	(2) SMR CODE	(3) NATIONAL STOCK NUMBER	(4) FSCM	(5) PART NUMBER	(6) DESCRIPTION USABLE ON CODE	(7) U/M	(8) QTY INC IN UNIT
4	1	XBOFF		80063	SC-D-913967	CUSHION ASSEMBLY	EA	1
4	2	PAOFF		80063	SC-D-784108-035	CABLE ASSEMBLY,RF	EA	1
4	3	PAOFF		80063	SC-D-784108-155	CABLE ASSEMBLY,RF	EA	1
4	4	PAOFF		80063	SC-D-784101-025	CABLE ASSEMBLY,RF	EA	1
4	5	PAOFF		80063	SC-D-784101-215	CABLE ASSEMBLY,RF	EA	1
4	6	PAOFF		80063	SC-D-784101-035	CABLE ASSEMBLY,RF	EA	1
4	7	PAOFF		80063	SC-D-784101-225	CABLE ASSEMBLY,RF	EA	1
4	8	PAOFF		80063	SC-D-784101-030	CABLE ASSEMBLY,RF	EA	1
4	9	PAOFF		80063	SC-D-784101-220	CABLE ASSEMBLY,RF	EA	1
4	10	PAOFF		80063	SC-D-784106-030	CABLE ASSEMBLY,AUD	EA	1
4	11	PAOFF		80063	SC-D-784113-125	CABLE ASSEMBLY,RF	EA	1
4	12	PAOFF		80063	SC-D-784101-210	CABLE ASSEMBLY,RF	EA	1
4	13	PAOFF		80063	SC-D-784113-140	CABLE ASSEMBLY,RF	EA	1
4	14	PAOFF		80063	SC-D-784106-090	CABLE ASSEMBLY,AUD	EA	1
4	15	PAOFF		80063	SC-D-784113-005	CABLE ASSEMBLY,RF	EA	1
4	16	PAOFF		80063	SC-D-784106-105	CABLE ASSEMBLY,AUD	EA	1
4	17	PAOFF		80063	SC-D-784101-020	CABLE ASSEMBLY,RF	EA	1
4	18	PAOFF		80063	SC-D-784106-015	CABLE ASSEMBLY,AUD	EA	1
4	19	PAOFF		80063	SC-D-784113-020	CABLE ASSEMBLY,RF	EA	1
4	20	PAOFF		80063	SC-D-784126	CABLE ASSY,PATCH	EA	3
4	21	PAOFF		80063	SC-D-784100-956	CABLE ASSEMBLY,RF	EA	2
4	22	PAOFF		80063	SC-D-784125	CABLE ASSY,PATCH	EA	3
4	23	PAOFF		80063	SC-D-784124	CABLE ASSEMBLY, PATCH	EA	2
4	24	PAOFF		80063	SC-D-784100-955	CABLE ASSEMBLY,RF	EA	20
4	25	PAOFF		80063	SC-D-784127	CABLE ASSMEBLY,AUD	EA	2
4	26	PAOFF		80063	SC-D-784124	CABLE ASSY,PATCH	EA	2
4	27	PAOFF		80063	SC-D-784100-955	CABLE ASSEMBLY,RF	EA	20
4	28	PAOFF		80063	SC-D-784127	CABLE ASSEMBLY,AUD	EA	2

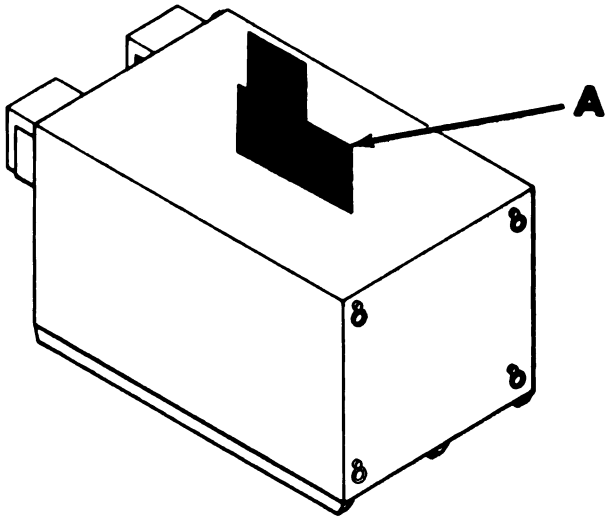

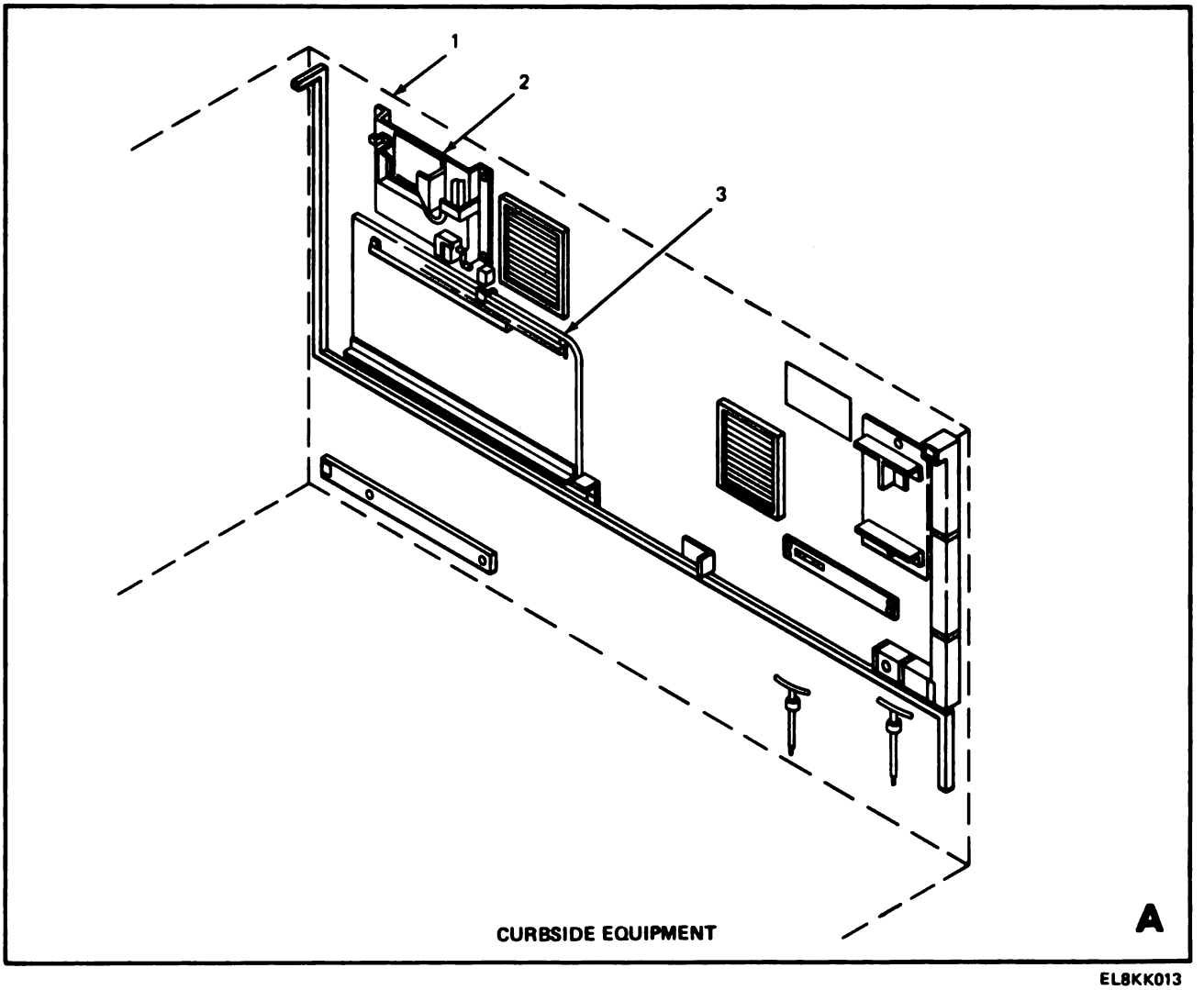

EL8KK013

Figure 5. Bracket Installations, Curbside Wall.

(1) ILLUSTRATION (a) FIG NO	(b) ITEM NO	(2) SMR CODE	(3) NATIONAL STOCK NUMBER	(4) FSCM	(5) PART NUMBER	(6) DESCRIPTION USABLE ON CODE	(7) U/M	(8) QTY INC IN UNIT
						GROUP 0101 BRACKET INSTALLATIONS		
						CURBSIDE WALL		
5	1	XBFFF		80063	SC-D-913780	UTILITIES,INSTL.....	EA	1
5	2	XBFFF		80063	SC-D-914091	PANEL ASSEMBLY.....	EA	1
5	3	XBFFF		80063	SC-D-914831	TABLE ASSEMBLY.....	EA	1

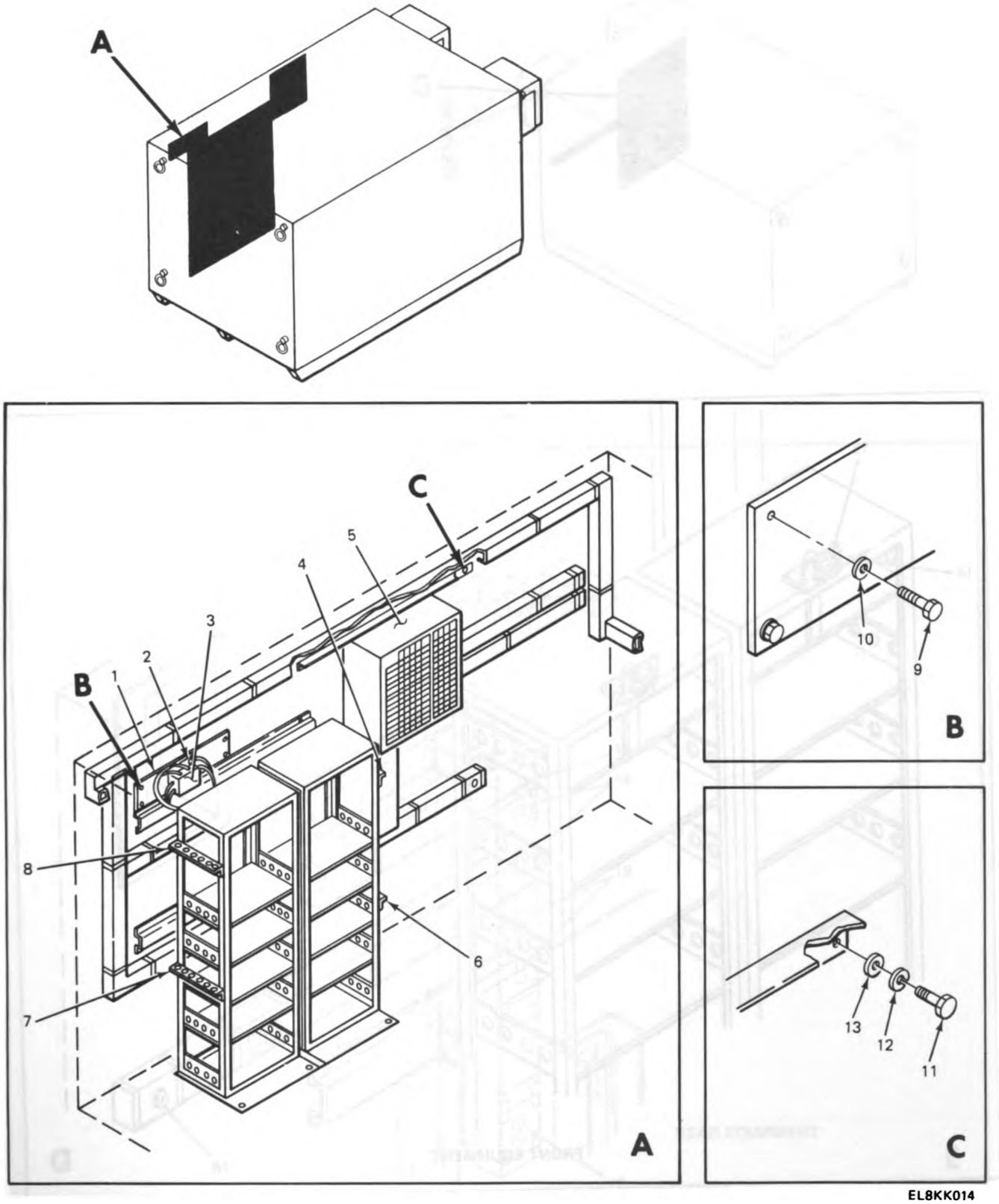

Figure 6. Utilities Installation (Sheet 1 of 4).

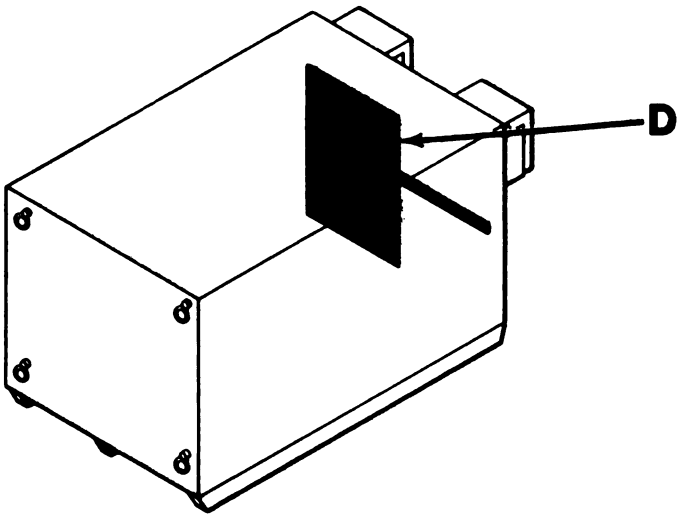

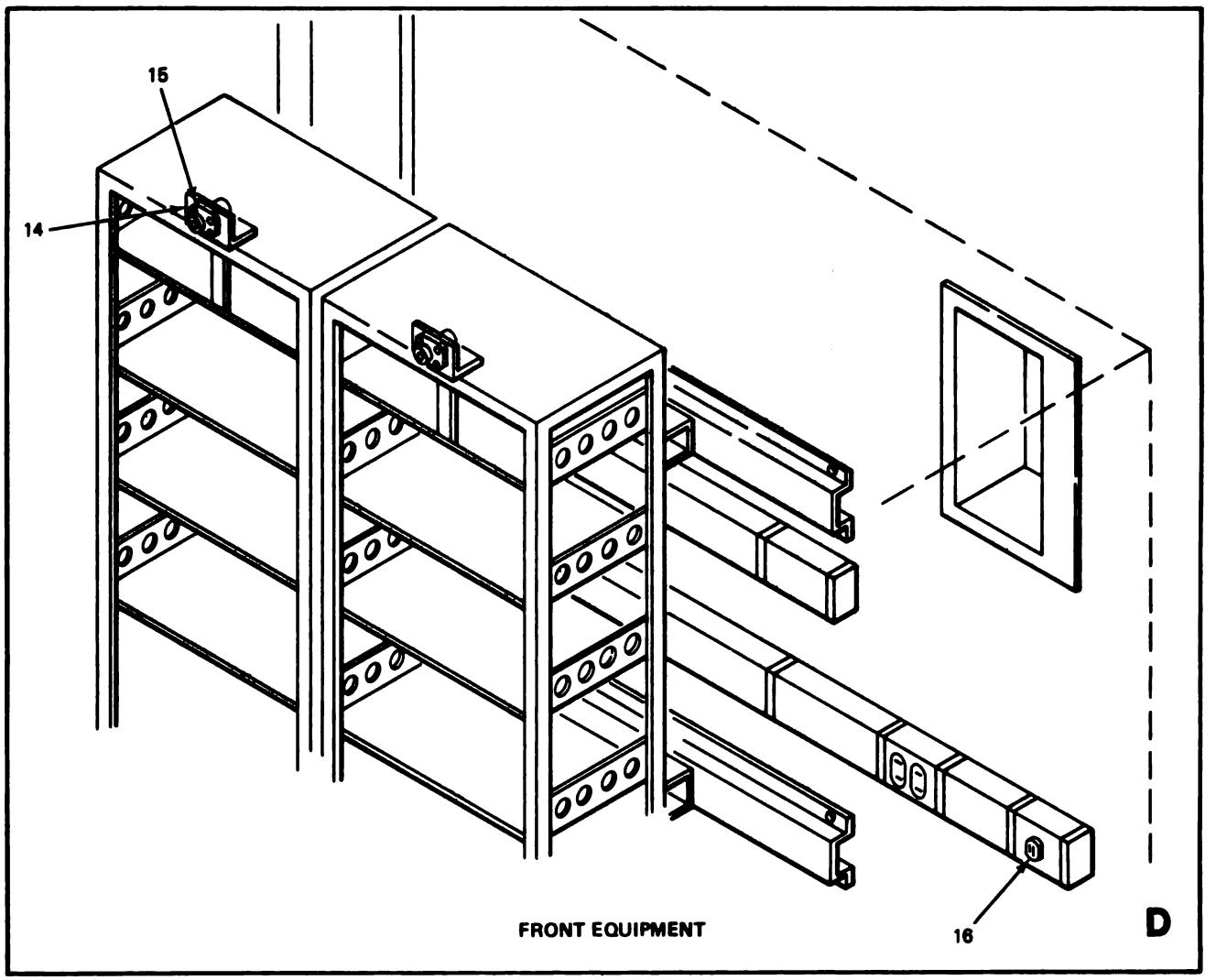

Figure 6. Utilities Installation (Sheet 2 of 4).

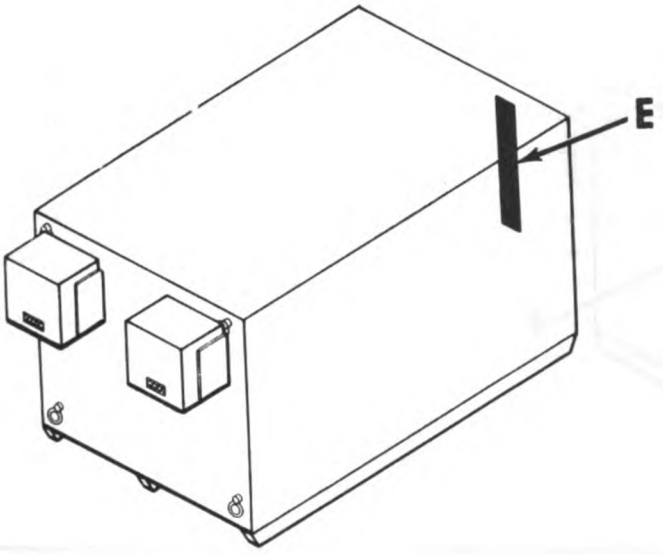

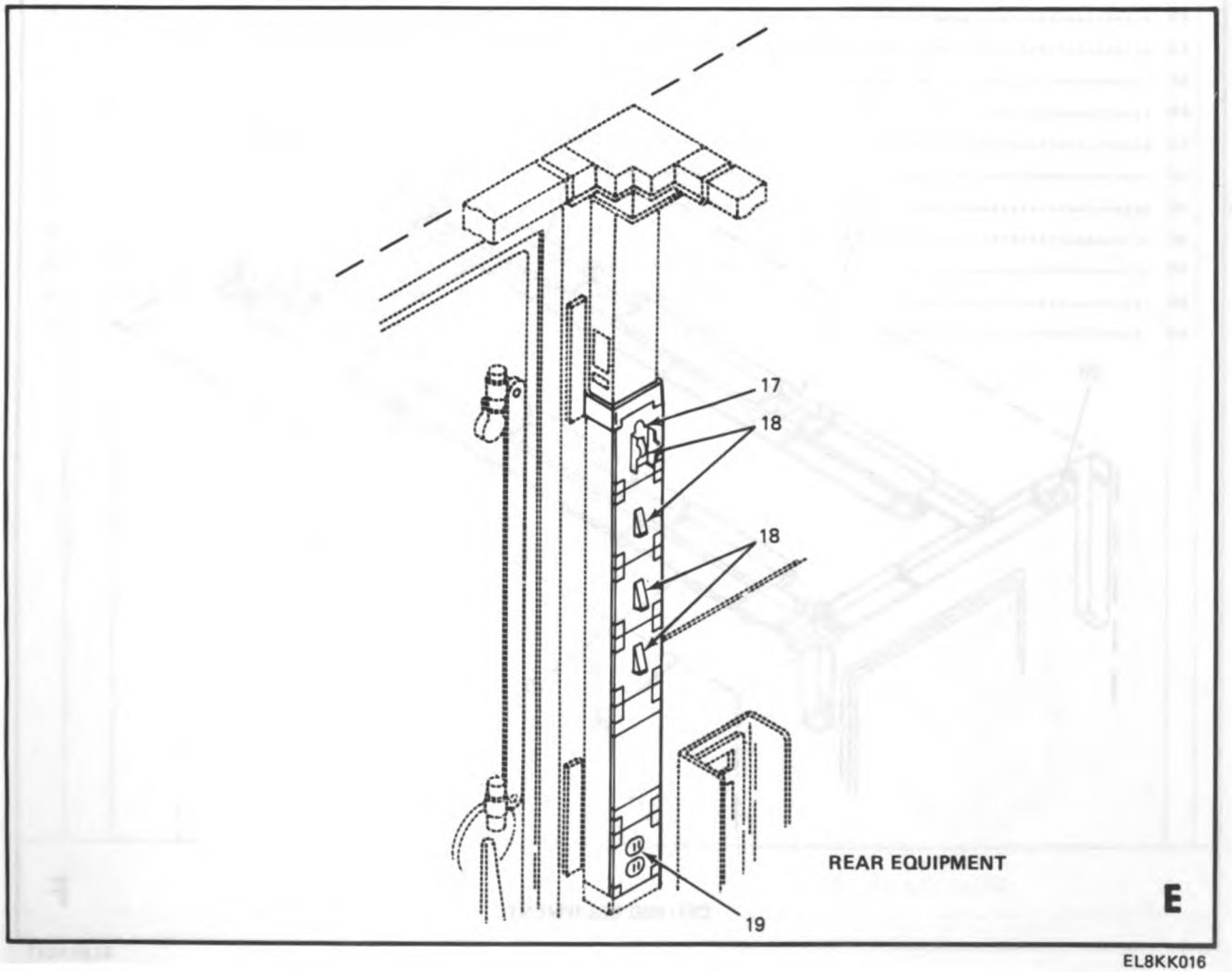

Figure 6. Utilities Installation (Sheet 3 of 4).

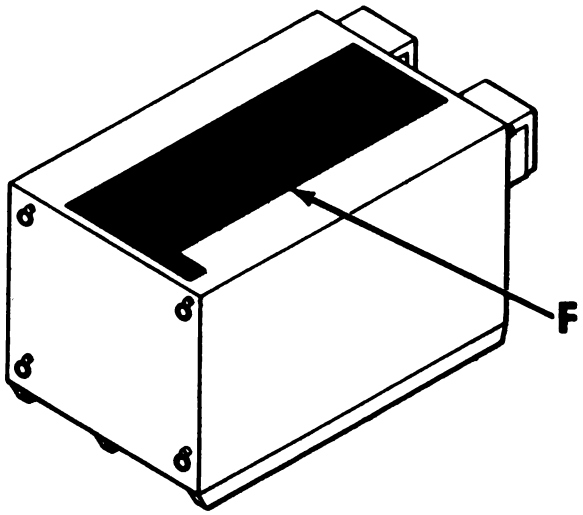

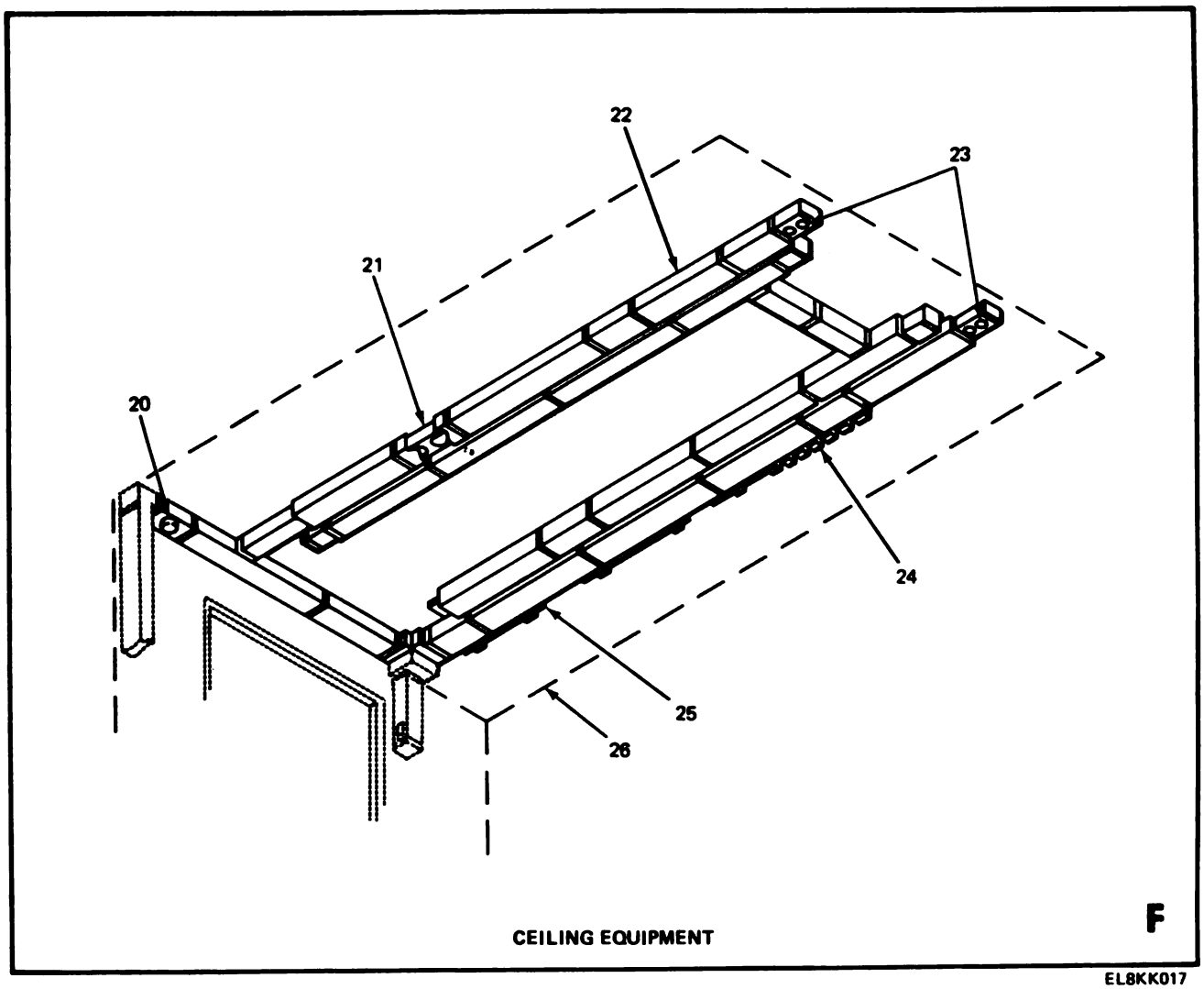

Figure 6. Utilities Installation (Sheet 4 of 4).

(1) ILLUSTRATION (a) FIG NO	(b) ITEM NO	(2) SMR CODE	(3) NATIONAL STOCK NUMBER	(4) FSCM	(5) PART NUMBER	(6) DESCRIPTION / USABLE ON CODE	(7) U/M	(8) QTY INC IN UNIT
						GROUP 010101 UTILITIES INSTALLATION		
6	1	PAFZZ	5975-01-122-5929	80063	SC-C-913931	PLATE,WALL,ELEC	EA	1
6	2	PAFZZ	5310-00-088-1251	96906	MS51922-1	NUT,SLFLKG HEX H HEXAGON HEAD	EA	4
6	3	XBFFF		80063	SC-B-947839	SWITCH BOX ASSEMBLY	EA	1
6	4	PAFZZ		80063	SC-C-913927	BRACKET INTCON	EA	1
6	5	XBFFF		80063	SC-D-913814	PATCH PANEL ASSY	EA	1
6	6	PAFZZ		80063	SC-C-913930	BRACKET ASSY (BYP)	EA	1
6	7	PAFZZ		80063	SC-C-913929	BRACKET ASSY (BYP)	EA	1
6	8	PAFZZ		80063	SC-C-913926	BRACKET INTCON	EA	1
6	9	PAFZZ	5305-00-225-3842	96906	MS90728-9	SCREW,CAP,HEXAGON H	EA	4
6	10	PAFZZ	5310-00-809-4058	96906	MS27183-10	WASHER,FLAT	EA	8
6	11	PAFZZ	5306-00-225-8500	96906	MS90725-35	BOLT,MACHINE	EA	6
6	12	PAFZZ	5310-00-407-9566	96906	MS35338-45	WASHER,LOCK	EA	10
6	13	PAFZZ	5310-00-081-4219	96906	MS27183-12	WASHER,FLAT	EA	6
6	14	PAFZZ		80063	SC-D-913978	BRACKET FDN LOOP	EA	1
6	15	PAOZZ	5935-00-903-8444	96906	MS3119E-8-4	ADAPTER,CONNECTOR	EA	2
6	16	PAFZZ	5935-01-024-4028	81348	WC596/41-2	CONNECTOR,RCPT	EA	3
6	17	XBFZZ		80063	SC-B-681026	GUARD SWITCH	EA	1
6	18	PAFZZ	5930-00-660-5584	81348	WS896/2-02A	SWITCH,TOGGLE	EA	4
6	19	PAFZZ	5935-01-058-9269	81348	WC596/40-2	CONNECTOR,RCPT	EA	2
6	20	PAFZZ	6250-00-153-6466	81348	W-L-142	LAMPHOLDER	EA	2
6	21	PAOZZ		80063	SC-D-681633	LAMP,INCANDESCENT	EA	4
6	22	PAFZZ	6210-01-034-1940	80063	SC-D-681036	FIXTURE,LIGHTING	EA	15
6	23	PAFZZ	5935-00-999-6934	75582	5225	RCPT AND SWITCH	EA	2
6	24	PAOZZ	6250-00-194-4794	80063	SC-B-539504	STARTER,FLUORESCENT	EA	5
6	25	PAOZZ	6240-00-152-2996	80063	SC-C-539495	LAMP,FLUORESCENT	EA	3
6	27	XBFFF		80063	SC-D-913781	UTILITIES,INSTL	EA	1

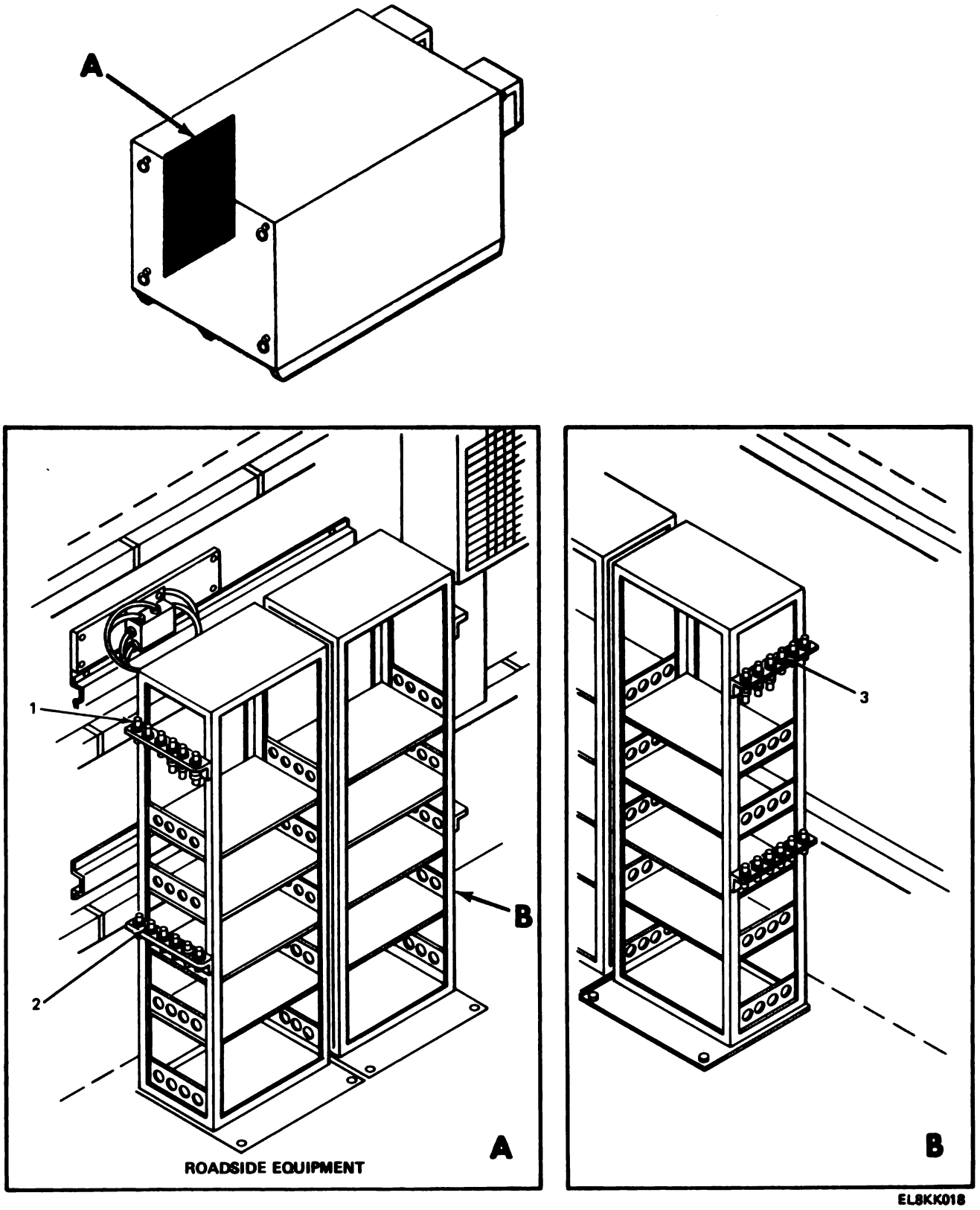

Figure 7. Bracket Interconnect Installation.

(1) ILLUSTRATION (a) FIG NO	(b) ITEM NO	(2) SMR CODE	(3) NATIONAL STOCK NUMBER	(4) FSCM	(5) PART NUMBER	(6) DESCRIPTION USABLE ON CODE	(7) U/M	(8) QTY INC IN UNIT
						GROUP 01010101 BRACKET INTERCONNECT INSTALLATION		
7	1	XBFZZ		81349	SC-C-784173	FEEDTHRU	EA	8
7	2	PAFZZ	5935-00-823-0308	81349	M55339/13-00492	ADAPTER,CONNECTOR	EA	12
7	3	PAFZZ	5985-00-459-1469	91836	KC-89-82	DUMMY LOAD GROUP,EL	EA	3

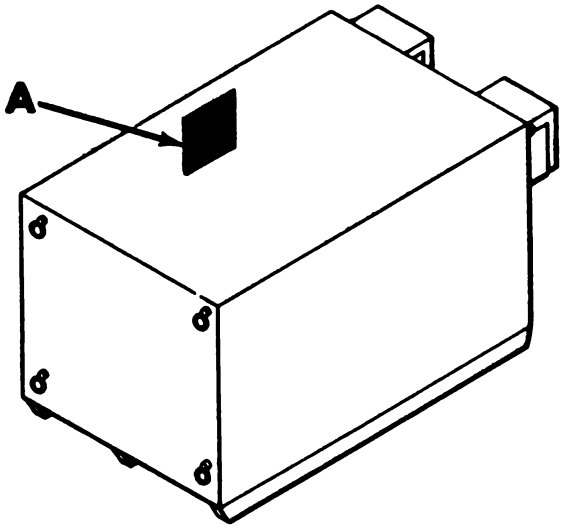

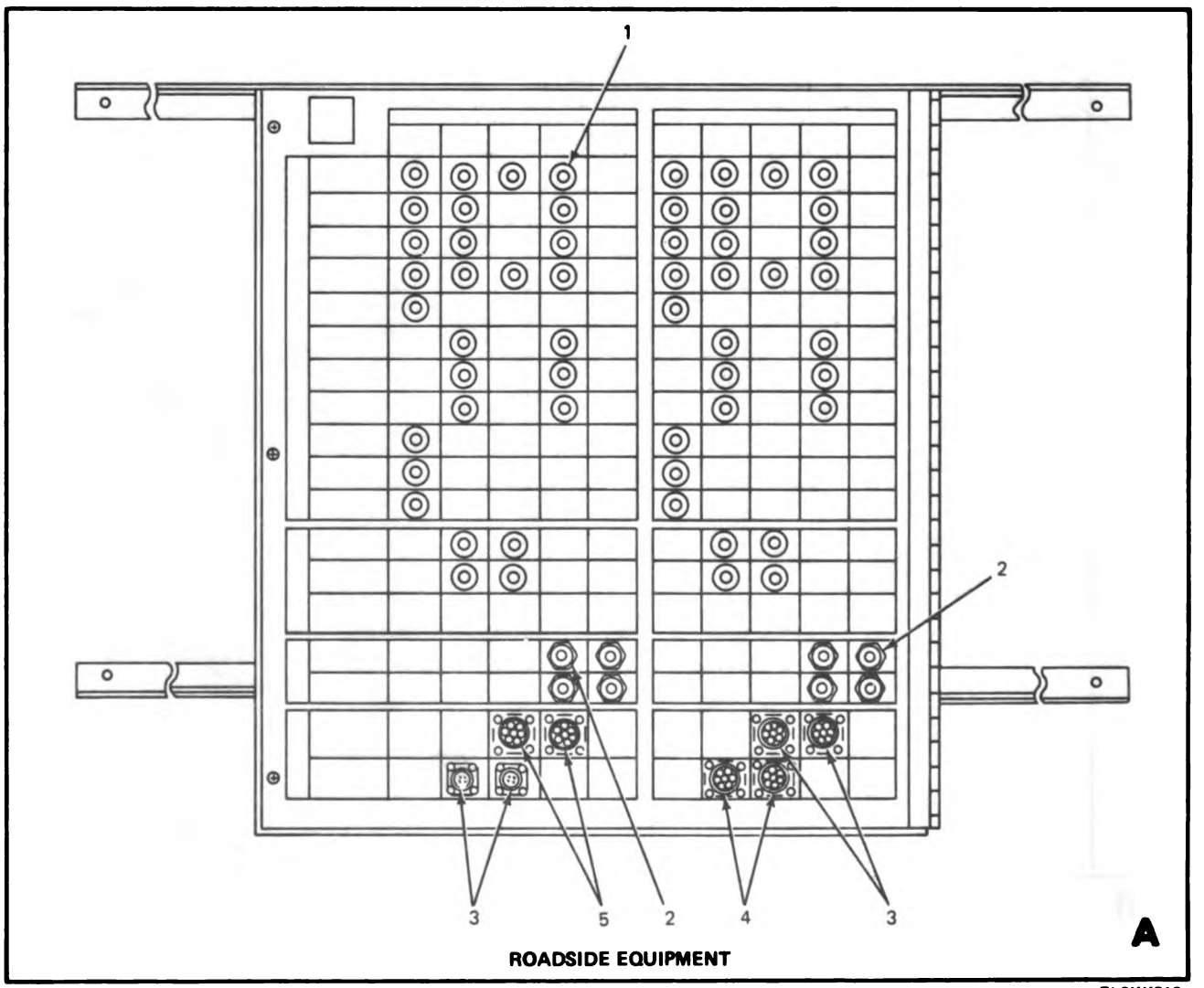

Figure 8. Patch Panel Assembly.

(1) ILLUSTRATION (a) FIG NO.	(b) ITEM NO.	(2) SMR CODE	(3) NATIONAL STOCK NUMBER	(4) FSCM	(5) PART NUMBER	(6) DESCRIPTION / USABLE ON CODE	(7) U/M	(8) QTY INC IN UNIT
						GROUP 01010102 PATCH PANEL ASSEMBLY		
8	1	PAFZZ	5935-00-823-0308	81349	M55339/13-00492	ADAPTER,CONNECTOR	EA	56
8	2	PAFZZ		80063	SC-C-784512	ADAPTER MHV	EA	8
8	3	PAFZZ	5935-00-958-9567	96906	MS3119E12-10	ADAPTER,CONNECTOR	EA	2
8	4	PAFZZ	5935-00-903-8444	96906	MS3119E8-4	ADAPTER,CONNECTOR	EA	4
8	5	PAFZZ	5935-01-110-7044	96906	MS3119E12-8	CONNECTOR,RECEPTACL	EA	2

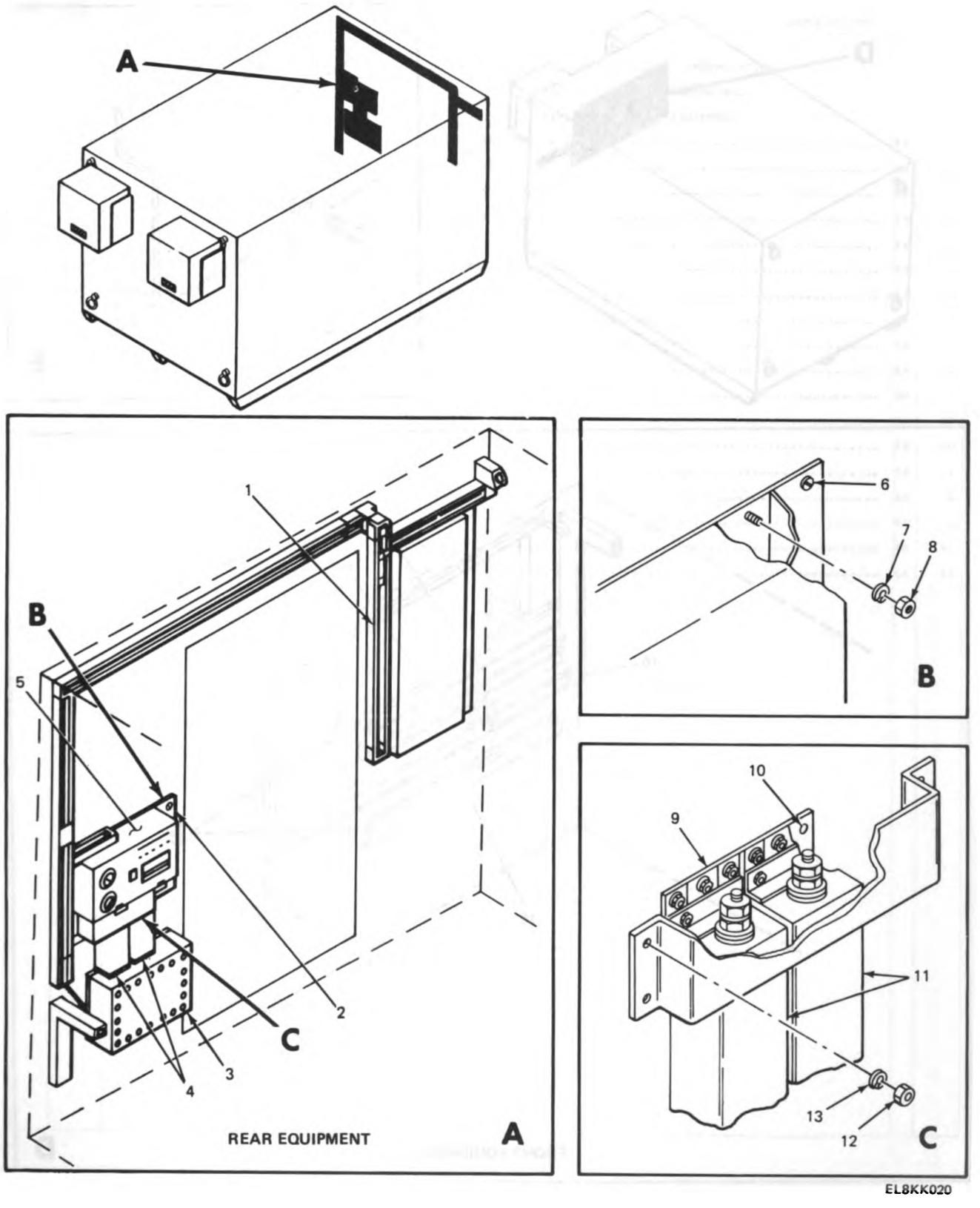

Figure 9. Utilities Installation, Front and Rear Wall Equipment (Sheet 1 of 2).

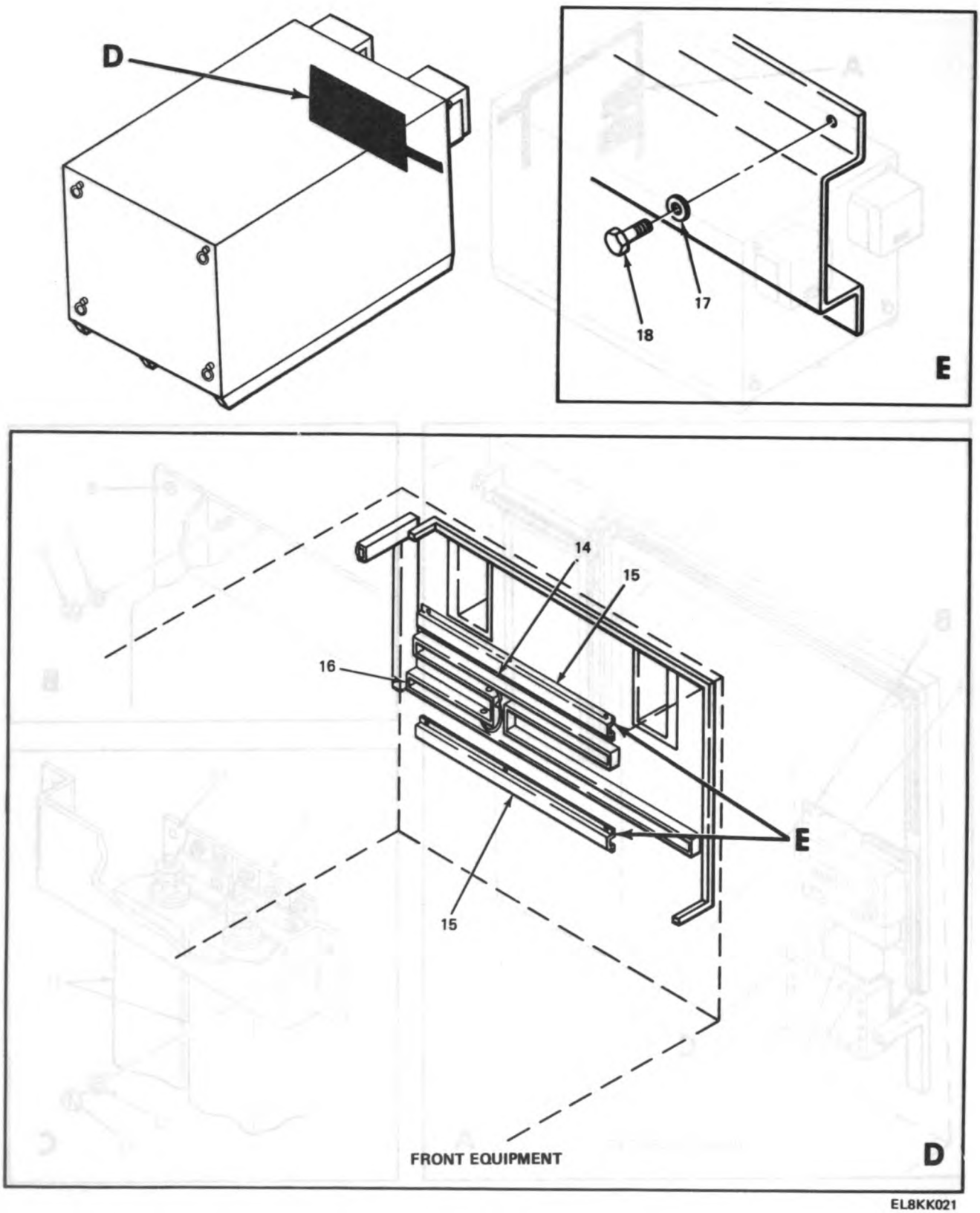

Figure 9. Utilities Installation, Front and Rear Wall Equipment (Sheet 2 of 2).

(1) ILLUSTRATION (a) FIG NO.	(b) ITEM NO.	(2) SMR CODE	(3) NATIONAL STOCK NUMBER	(4) FSCM	(5) PART NUMBER	(6) DESCRIPTION USABLE ON CODE	(7) U/M	(8) QTY INC IN UNIT
						GROUP 01010103 UTILITIES INSTALLATION,		
						01010103 FRONT AND REAR WALL		
						01010103 EQUIPMENT		
9	1	XBFFF		80063	SC-D-914645	RACEWAY ASSEMBLY	EA	1
9	2	PAFZZ		80063	SC-D-913951	PLATE,POWER DISTR	EA	1
9	3	XBFFF		80063	SC-D-913972	BOX ASSEMBLY,POWER	EA	1
9	4	XBFFF		80063	SC-C-913954	FILTER ASSEMBLY	EA	2
9	5	XBFFF		80063	SC-D-914087	POWER DISTR BOX	EA	1
9	6	PAFZZ		96906	MS24693-98	SCREW,MACHINE	EA	4
9	7	PAFZZ	5310-00-011-5551	96906	MS35333-10	WASHER,LOCK	EA	12
9	8	PAFZZ	5310-00-088-1251	96906	MS51922-1	NUT,SLFLKG,HEX HD	EA	12
9	9	PAFZZ		80063	SC-C-913953	PLATE ASSEMBLY	EA	1
9	10	PAFZZ	5320-00-236-3929	19738	1604-0615	RIVET,BLIND	EA	2
9	11	PAFZZ	5915-00-909-7762	80063	SC-D-681143	FILTER	EA	1
9	12	PAFZZ	5310-00-965-1820	96906	MS51922-3	NUT,SELF-LOCKING	EA	10
9	13	PAFZZ	5310-00-595-7237	96906	MS35333-42	WASHER,LOCK	EA	10
9	14	XBFFF		80063	SC-D-914670	RACEWAY ASSEMBLY	EA	1
9	15	PAFZZ		80063	SC-D-913804	BRACKET ASSEMBLY	EA	2
9	16	XBFFF		80063	SC-D-913790	RACEWAY ASSEMBLY	EA	1
9	17	PAFZZ	5310-00-407-9566	96906	MS35338-45	WASHER,LOCK	EA	41
9	18	PAFZZ	5305-00-225-9081	96906	MS90725-36	SCREW,CAP,HEXAGON H	EA	41

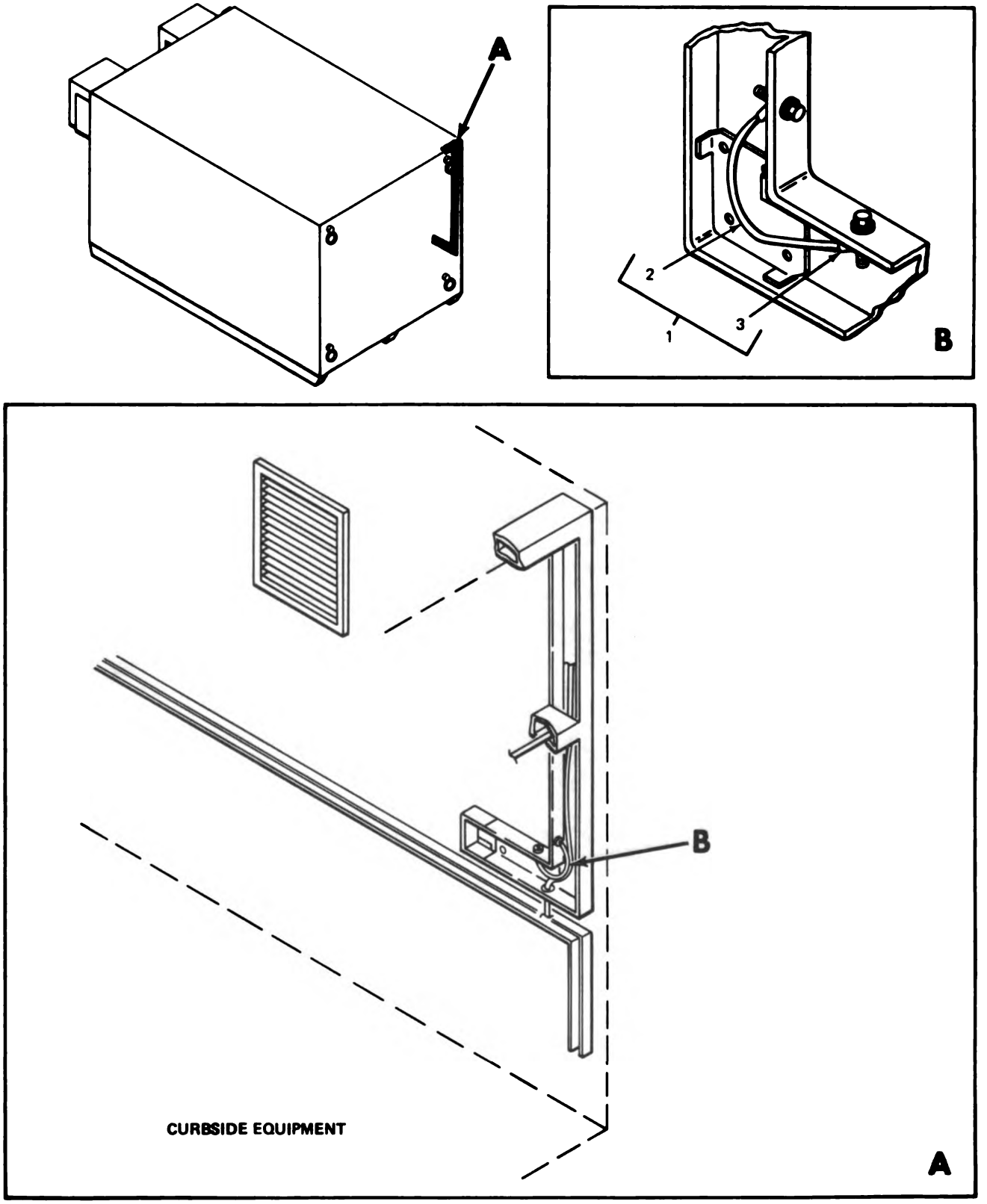

Figure 10. Utilities Installation, Roadside, Curbside and Ceiling Equipment (Sheet 1 of 3).

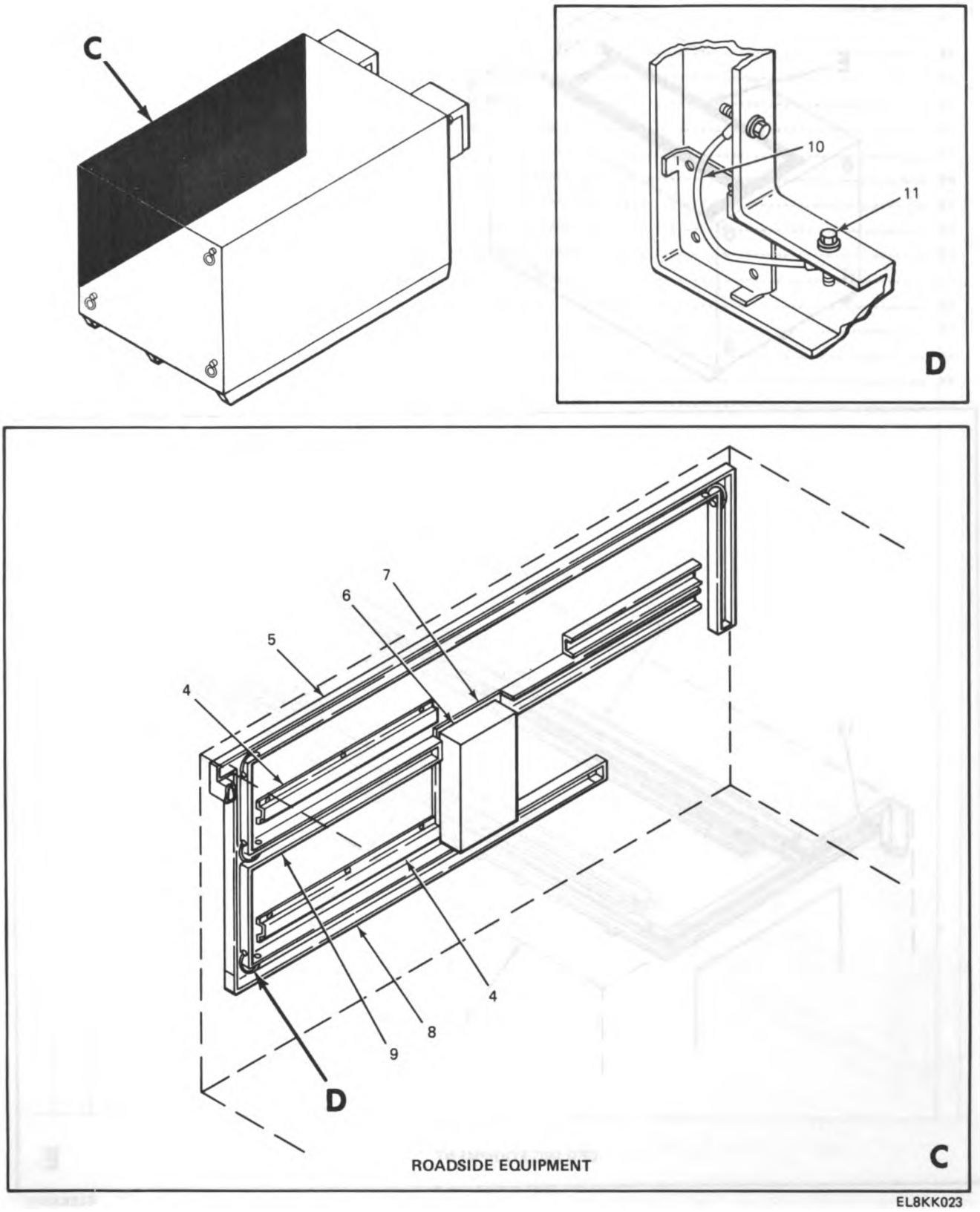

Figure 10. Utilities Installation, Roadside, Curbside and Ceiling Equipment (Sheet 2 of 3).

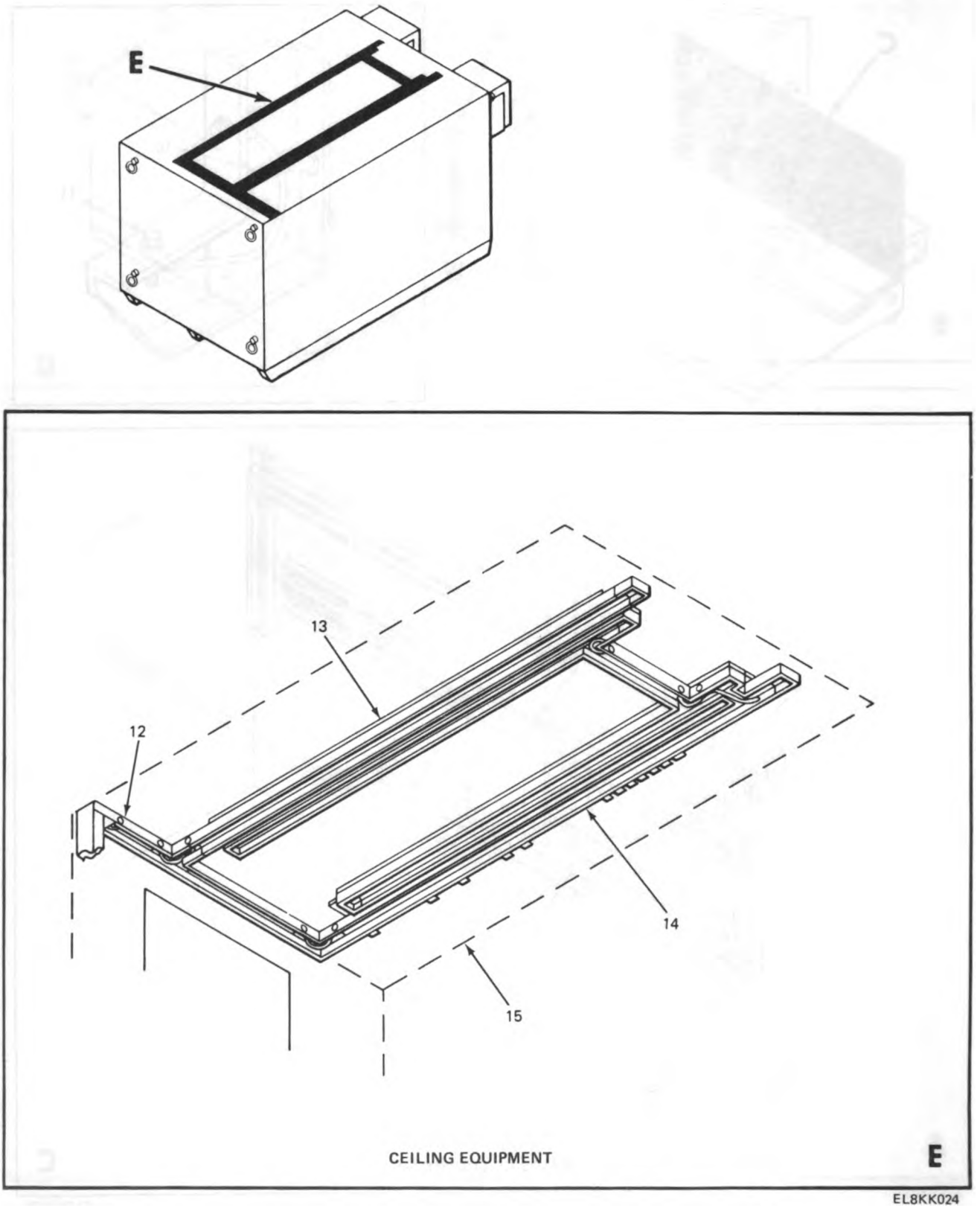

Figure 10. Utilities Installation, Roadside, Curbside and Ceiling Equipment (Sheet 3 of 3).

(1) ILLUSTRATION (a) FIG NO.	(b) ITEM NO.	(2) SMR CODE	(3) NATIONAL STOCK NUMBER	(4) FSCM	(5) PART NUMBER	(6) DESCRIPTION USABLE ON CODE	(7) U/M	(8) QTY INC IN UNIT
10	1	XBFZZ		80063	SC-C-914849	WIRE ASSEMBLY	EA	1
10	2	XBFZZ	6145-01-062-9820	81349	HW-C10(105)U5	WIRE,ELECTRICAL	EA	1
10	3	PAFZZ	5940-00-143-4794	96906	MS25036-112	TERMINAL,LUG	EA	2
10	4	PAFZZ		80063	SC-D-913924	BRACKET ASSEMBLY	EA	1
10	5	XBFFF		80063	SC-D-913973	RACEWAY ASSEMBLY	EA	1
10	6	XBFFF		80063	SC-D-914421	VIDEO ENTRANCE BOX	EA	1
10	7	XBFFF		80063	SC-D-913824	BOX,VIDEO ANTENNA	EA	1
10	8	XBFFF		80063	SC-D-913791	SIGNAL ENTRANCE BOX	EA	1
10	9	XBFFF		80063	SC-D-913822	RACEWAY ASSEMBLY	EA	1
10	10	XBFZZ		80063	SC-B-489705GR-1	WIRE ASSEMBLY	EA	17
10	11	PAFZZ	5310-00-543-4385	96906	MS35333-46	WASHER,LOCK	EA	41
10	12	XBFFF		80063	SC-D-913955	CEILING PLATE,REAR	EA	1
10	13	XBFZZ		80063	SC-D-913949	CEILING PLATE	EA	1
10	14	XBFZZ		80063	SC-D-913950	CEILING PLATE RD SD	EA	1
10	15	PDOHH	5820-01-110-2206	80063	SC-D-913782	SHELTER MODIFIED	EA	1

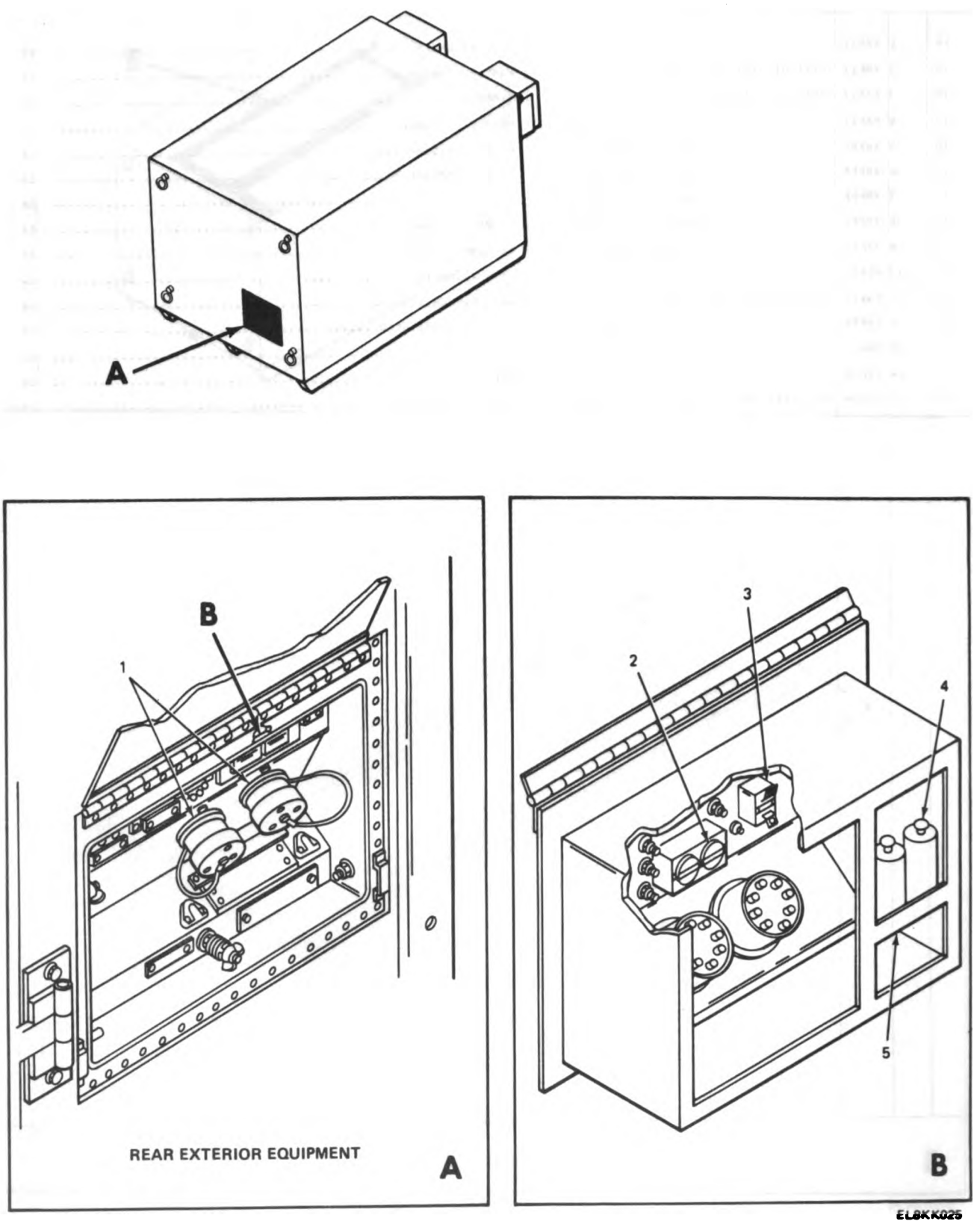

Figure 11. Power Entrance Box Assembly.

(1) ILLUSTRATION (a) FIG NO.	(b) ITEM NO.	(2) SMR CODE	(3) NATIONAL STOCK NUMBER	(4) FSCM	(5) PART NUMBER	(6) DESCRIPTION USABLE ON CODE	(7) U/M	(8) QTY INC IN UNIT
						GROUP 0101010301 POWER ENTRANCE BOX ASSEMBLY		
11	1	PAFZZ		81349	UG-2381/U	CONNECTOR RECEPTICA	EA	2
11	2	PAFZZ	5935-01-058-9269	81348	W-C-596/40-2	CONNECTOR,RCPT	EA	1
11	3	PAFZZ	5925-00-681-4952	96906	MS25244-10	CIRCUIT BREAKER	EA	1
11	4	PAFZZ	5935-00-763-6983	96906	MS3105-28	DUMMY CONN,RCPT	EA	4
11	5	PAFZZ		80063	SC-D-681151	GASKET	EA	1

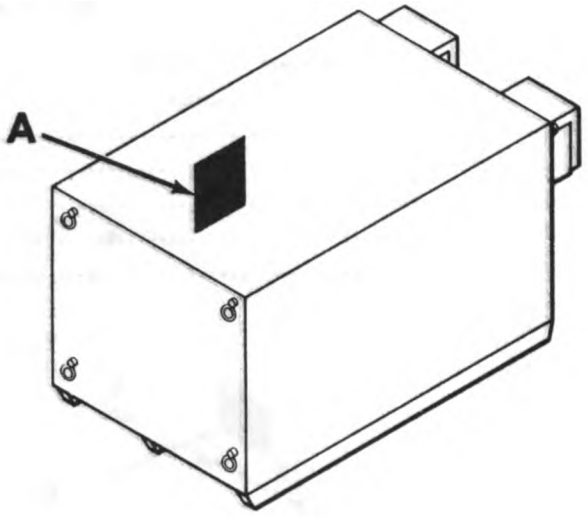

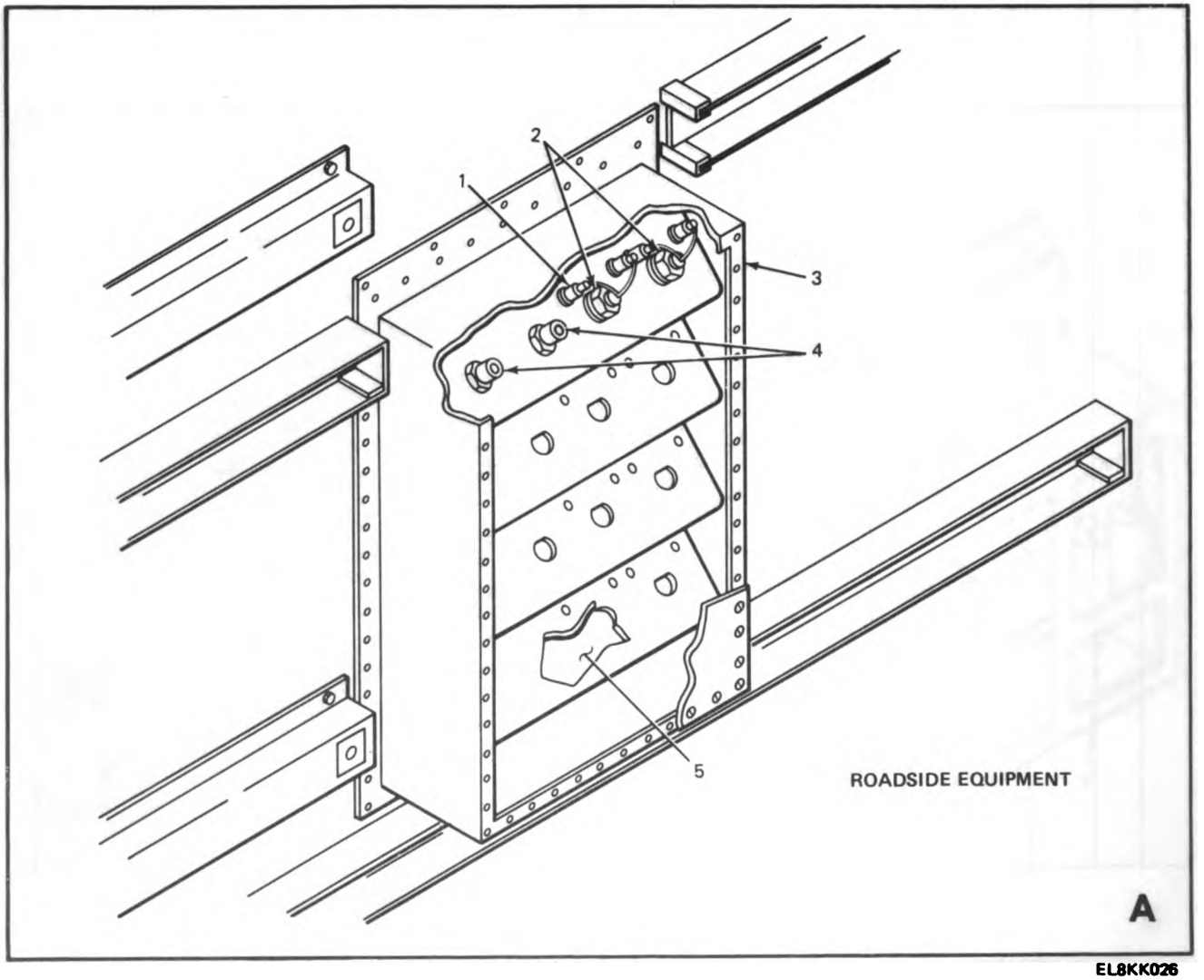

EL8KK026

Figure 12. Video Antenna Box.

(1) ILLUSTRATION (a) FIG NO	(b) ITEM NO	(2) SMR CODE	(3) NATIONAL STOCK NUMBER	(4) FSCM	(5) PART NUMBER	(6) DESCRIPTION USABLE ON CODE	(7) U/M	(8) QTY INC IN UNIT
						GROUP 0101010302 VIDEO ANTENNA BOX		
12	1	XBFFF		80063	SC-C-913975	LIGHTING ARSR ASSY.....	EA	4
12	2	PAFZZ	5935-00-449-7747	80063	SCB598923	CONNECTOR,RCPT.....	EA	2
12	3	XAFZZ		80063	SC-D-914435-002	BOX SUB ASSEMBLY.....	EA	1
12	4	PAFZZ	5935-00-134-5646	96906	MS90579-1375	ADAPTER,CONNECTOR.....	EA	2
12	5	XBFFF		80063	SC-C-913825	COVER PLATE ASSY.....	EA	3

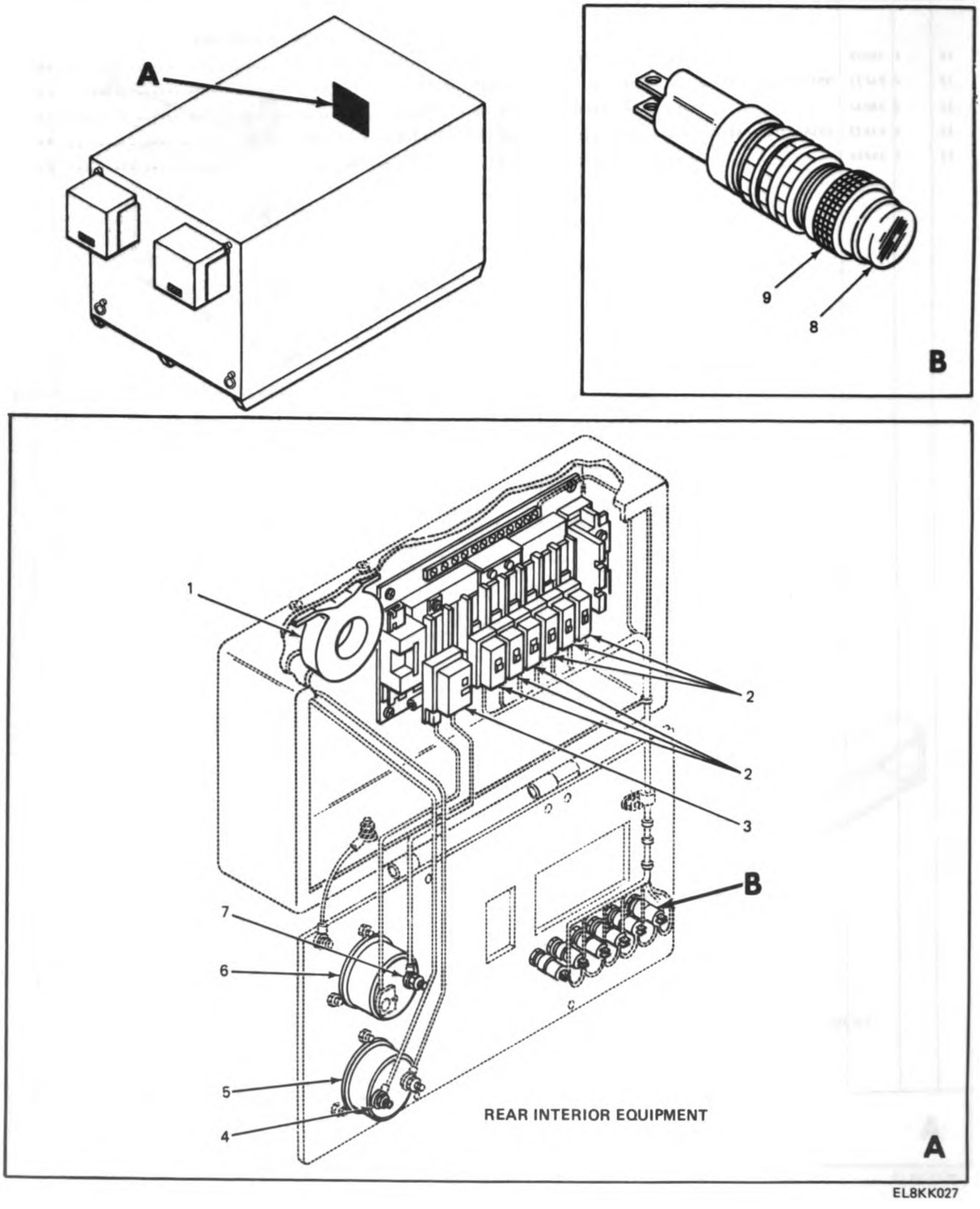

Figure 13. Power Distribution Box.

(1) ILLUSTRATION (a) FIG NO	(b) ITEM NO	(2) SMR CODE	(3) NATIONAL STOCK NUMBER	(4) FSCM	(5) PART NUMBER	(6) DESCRIPTION / USABLE ON CODE	(7) U/M	(8) QTY INC IN UNIT
						GROUP 0101010303 POWER DISTRIBUTION BOX		
13	1	PAFZZ	5950-00-892-8208	93993	3CT11B	TRANSFORMER,CURRENT	EA	1
13	2	PAFZZ	5925-01-111-7562	81348	WC375/01-003	CIRCUIT BREAKER	EA	6
13	3	PAFZZ	5925-01-099-8648	81348	WC375/02-009	CIRCUIT BREAKER	EA	1
13	4	PAFZZ	5940-00-230-0515	96906	MS25036-154	TERMINAL,LUG	EA	2
13	5	PAFZZ	6625-00-752-8464	81349	MR36W100ACAAR	AMMETER	EA	1
13	6	PAFZZ	6625-00-193-0636	81349	MR36W150ACVVR	VOLTMETER,ELEK	EA	1
13	7	PAFZZ	5940-00-143-4777	96906	MS25036-157	TERMINAL,LUG	EA	2
13	8	PAOZZ	6240-00-669-6554	80204	6AC	LAMP,GLOW	EA	6
13	9	PAOZZ	6210-01-110-3717	72619	37-0408-0337-245	LIGHT,INDICATOR	EA	6

43/(44 BLANK)

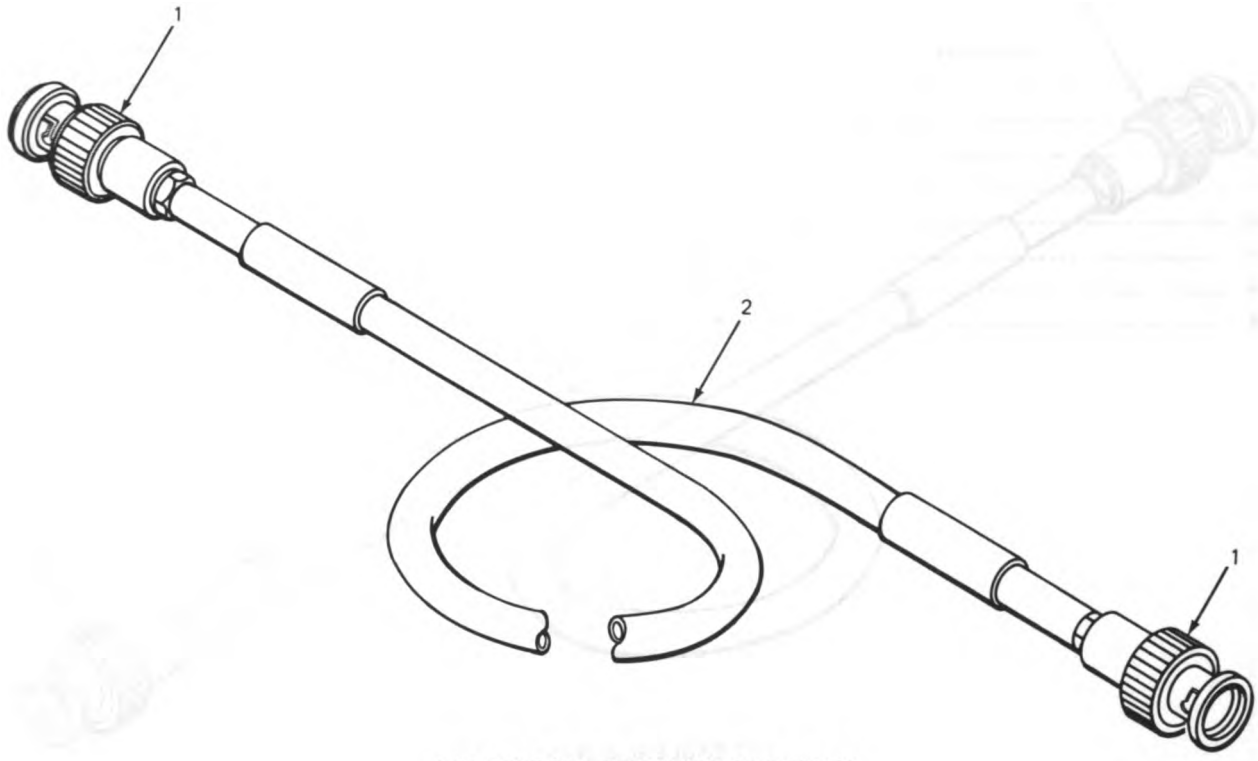

RF CABLE SC-D-784100 AND SC-D-784101

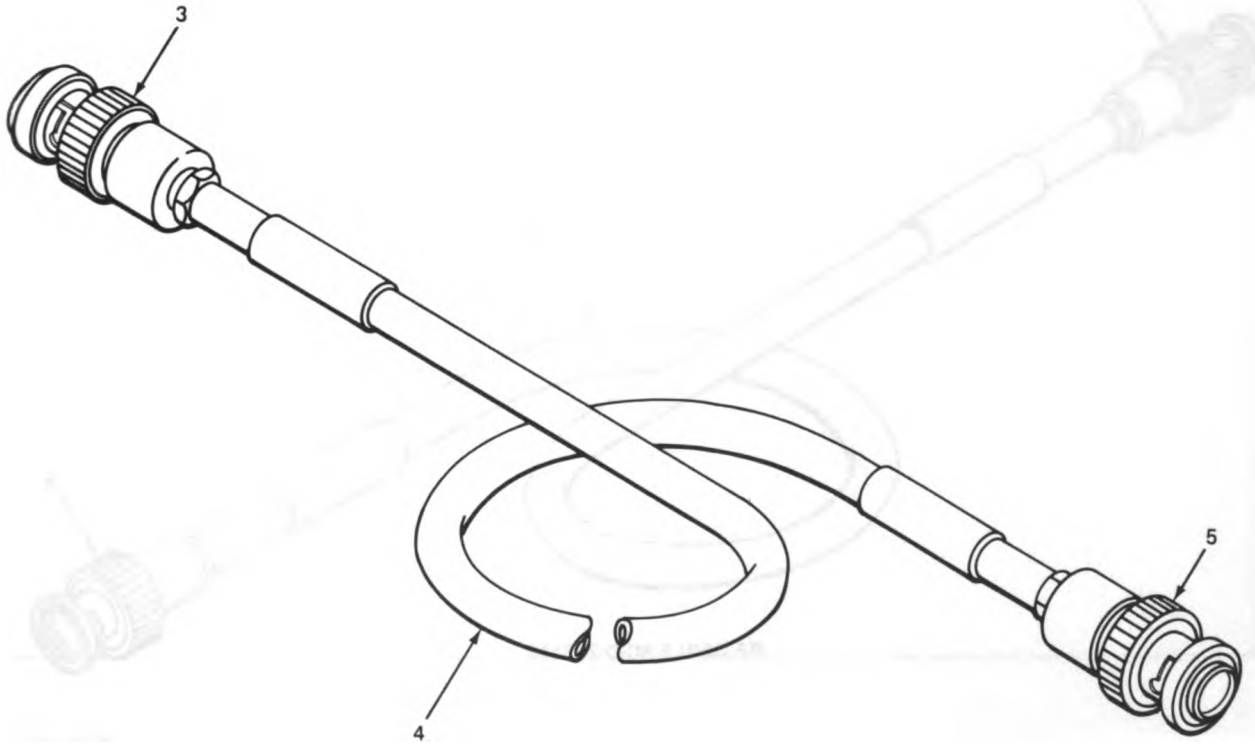

RF CABLE SC-D-784108

EL8KK028

Figure 14. R.F. Cable Assemblies (Sheet 1 of 2).

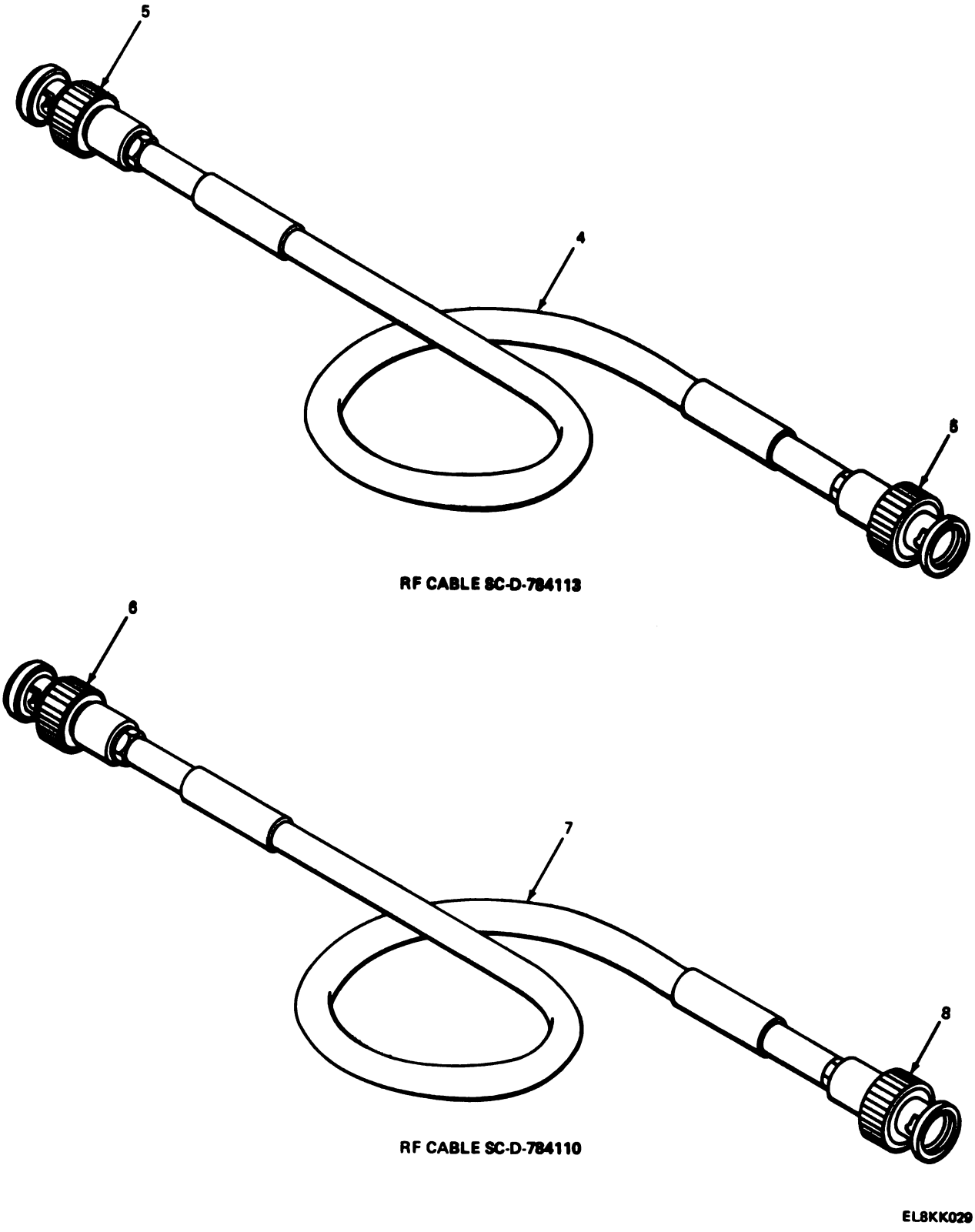

Figure 14. R.F. Cable Assemblies (Sheet 2 of 2).

(1) ILLUSTRATION (a) FIG NO	(b) ITEM NO	(2) SMR CODE	(3) NATIONAL STOCK NUMBER	(4) FSCM	(5) PART NUMBER	(6) DESCRIPTION USABLE ON CODE	(7) U/M	(8) QTY INC IN UNIT
						GROUP 0102 R.F. CABLE ASSEMBLIES		
14	1	PAFZZ	5935-01-043-6935	81349	M39012/16-0102	CONNECTOR,PLUG,ELEC	EA	4
14	2	XBFZZ	6145-00-683-5353	81349	RG-71B/U	CABLE,RF	FT	V
14	3	PAFZZ	5935-01-110-6791	80063	SC-C-784005	CONNECTOR,PLUG,ELEC	EA	1
14	4	XBFZZ		80063	SC-C-784000	CABLE,TWINAX	FT	V
14	5	PAFZZ	5935-00-105-4641	14949	PL-75-9	CONNECTOR,PLUG,ELEC	EA	1
14	6	PAFZZ	5935-01-110-2360	80063	SC-C-784526-2	CONNECTOR,PLUG,ELEC	EA	1
14	7	XBFZZ		81349	RG-58C/U	CABLE,COAXIAL	FT	V
14	8	PAFZZ	5935-01-110-2359	80063	SC-C-784526-1	CONNECTOR,PLUG,ELEC	EA	1

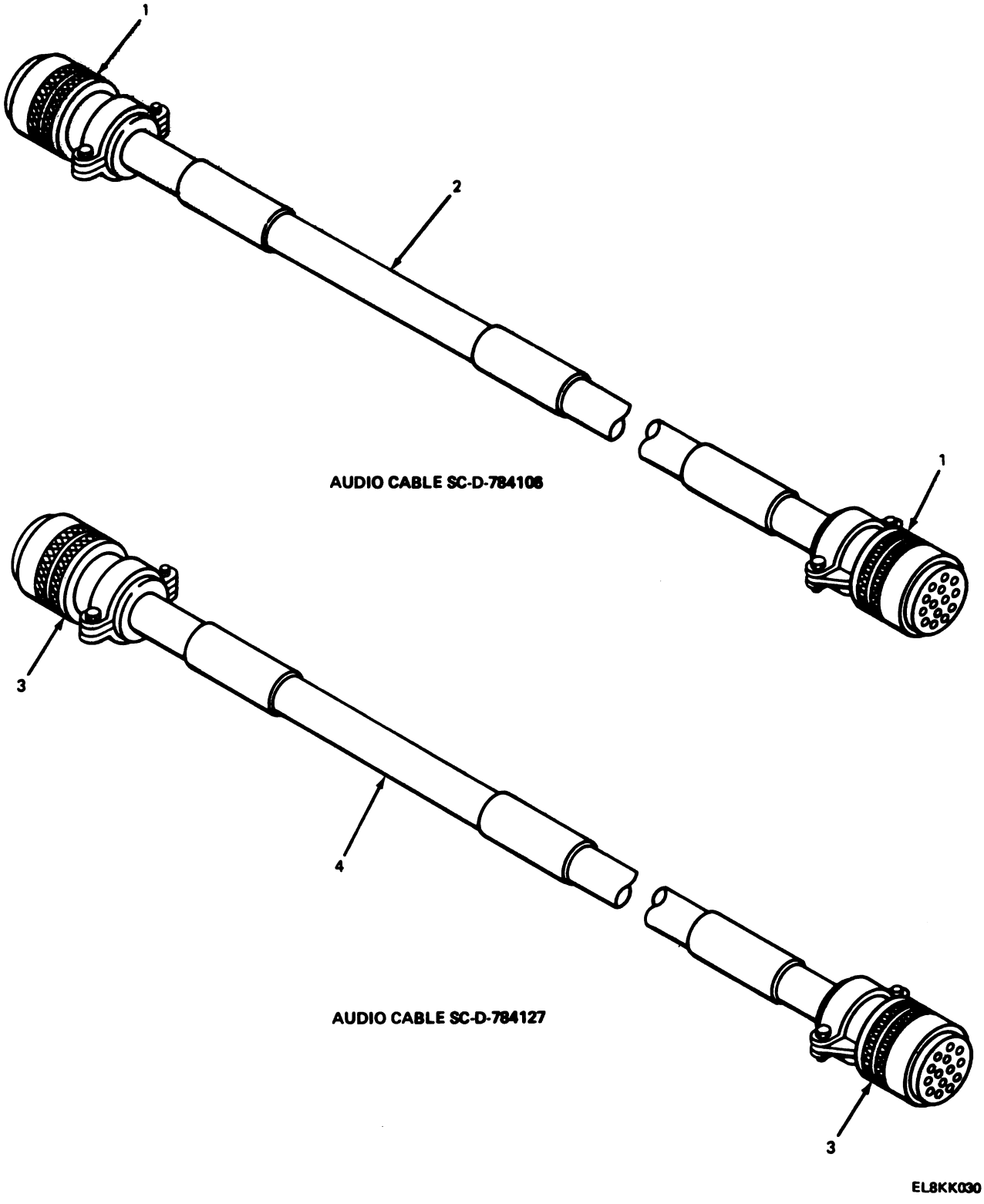

Figure 15. Audio Cable Assemblies.

(1) ILLUSTRATION (a) FIG NO.	(b) ITEM NO.	(2) SMR CODE	(3) NATIONAL STOCK NUMBER	(4) FSCM	(5) PART NUMBER	(6) DESCRIPTION USABLE ON CODE	(7) U/M	(8) QTY INC IN UNIT
						GROUP 0103 AUDIO CABLE ASSEMBLIES		
15	1	PAFZZ	5935-00-233-3225	96906	MS3116J14-19S	CONNECTOR,PLUG,ELEC	EA	2
15	2	XBFZZ		80063	SC-C-784004	CABLE,SP,ELECTRICAL	FT	V
15	3	PAFZZ		96906	MS3116J12-8S	CONNECTOR,PLUG,ELEC	EA	2
15	4	XBFZZ		81349	WF-11A/U	CORD,AUDIO,ELECT	FT	V

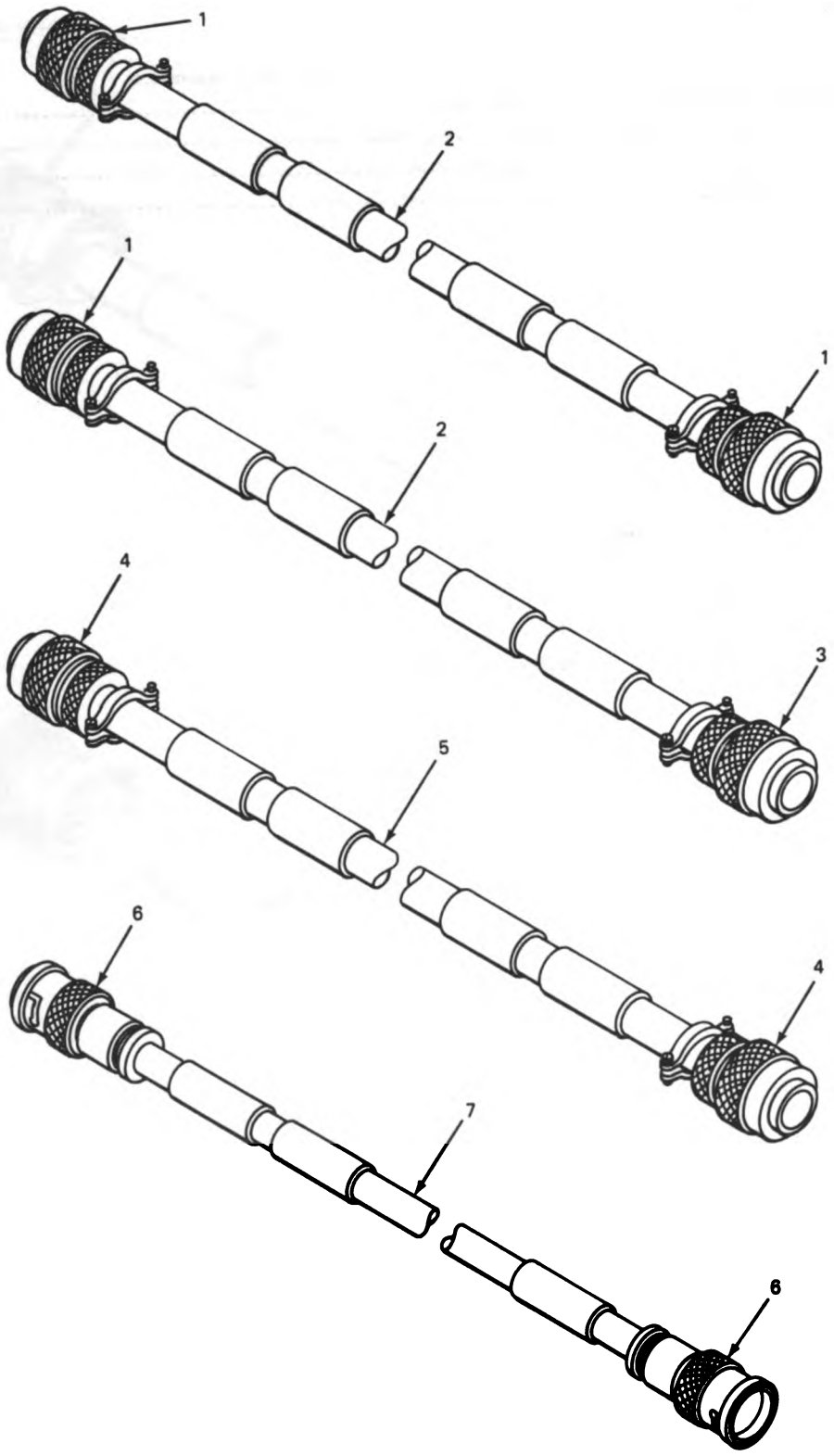

Figure 16. Patch Cable Assemblies.

(1) ILLUSTRATION (a) FIG NO.	(b) ITEM NO.	(2) SMR CODE	(3) NATIONAL STOCK NUMBER	(4) FSCM	(5) PART NUMBER	(6) DESCRIPTION USABLE ON CODE	(7) U/M	(8) QTY INC IN UNIT
						GROUP 0104 PATCH CABLE ASSEMBLIES		
16	1	PAFZZ	5935-00-926-3091	96906	MS3116J12-10P	CONNECTOR,PLUG,ELEC	EA	3
16	2	XBFZZ		81349	WM-62A/U	CORD,AUDIO,ELECTRIC	FT	V
16	3	PAFZZ		96906	MS3116J12-8S	CONNECTOR,PLUG,ELEC	EA	1
16	4	PAFZZ	5935-00-001-5772	96906	MS3116J8-4S	CONNECTOR,PLUG,ELEC	EA	2
16	5	XBFZZ		81349	WF-11A/U	CORD,AUDIO,ELECTRIC	FT	V
16	6	PAFZZ	5935-01-043-0629	81349	M39012/16-0101	CONNECTOR,PLUG,ELEC	EA	2
16	7	XBFZZ		81349	RC-58C/U	CABLE,COAXIAL	FT	V

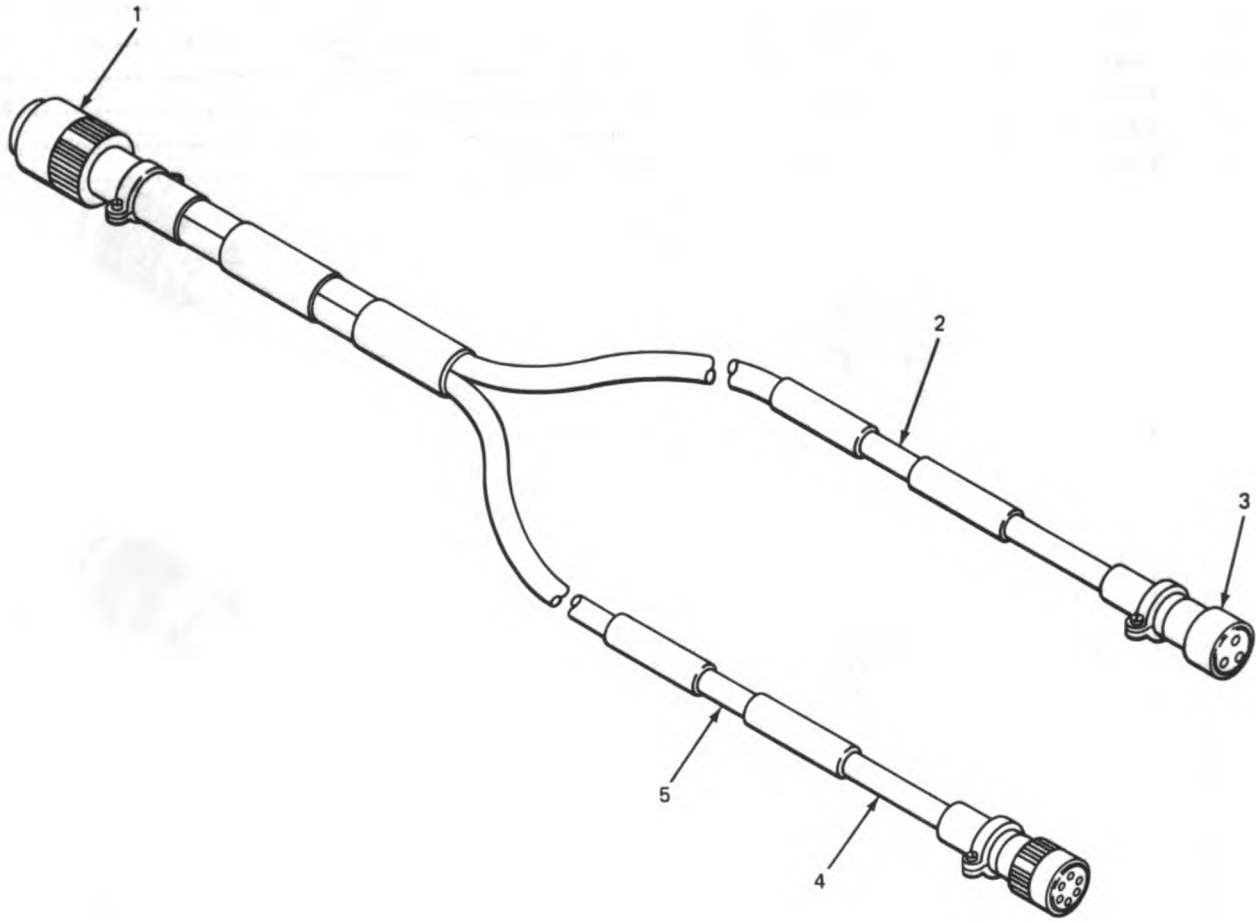

EL8KK032

Figure 17. Special Electrical Cable Assembly.

(1) ILLUSTRATION (a) FIG NO.	(b) ITEM NO.	(2) SMR CODE	(3) NATIONAL STOCK NUMBER	(4) FSCM	(5) PART NUMBER	(6) DESCRIPTION / USABLE ON CODE	(7) U/M	(8) QTY INC IN UNIT
						GROUP 0105 SPECIAL ELECTRICAL CABLE ASSY		
17	1	PAFZZ	5935-00-762-1495	96906	MS3116F12-10S	CONNECTOR,PLUG,ELEC	EA	1
17	2	XBFZZ		80063	SM-A-698804-2	CABLE,POWER,ELEC	FT	V
17	3	PAFZZ		80063	SC-C-913981	CONNECTOR,PLUG,ELEC	EA	1
17	4	PAFZZ	5935-00-762-1504	96906	MS3116F10-6P	CONNECTOR,PLUG,ELEC	EA	1
17	5	XBFZZ		80063	SM-A-698804-1	CABLE,POWER,ELEC	FT	V

NOTE: LATEST NATIONAL STOCK NUMBER AND PART NUMBER ASSIGNMENTS ARE INCLUDED AT END OF INDEX

STOCK NUMBER	FIGURE NO.	ITEM NO.
5935-00-001-5772	16	4
5310-00-011-5551	9	7
5310-00-014-5850	3	5
5805-00-069-8795	1	3
5310-00-081-4219	6	13
5310-00-088-1251	6	2
5310-00-088-1251	9	8
5935-00-105-4641	14	5
5935-00-134-5646	1	11
5935-00-134-5646	12	4
5940-00-143-4777	13	7
5940-00-143-4794	10	3
5995-00-144-0228	1	7
5995-00-144-0282	1	14
6240-00-152-2996	6	25
6250-00-153-6466	6	20
6625-00-179-5217	1	15
6625-00-193-0636	13	6
6250-00-194-4794	6	24
5975-00-224-5260	3	1
5305-00-225-3842	6	9
5306-00-225-8500	6	11
5305-00-225-9081	9	18
5940-00-230-0515	13	4
5935-00-233-3225	15	1
5320-00-236-3929	9	10
4030-00-298-1382	1	1
5975-00-395-9002	1	16
5310-00-407-9566	6	12
5310-00-407-9566	9	17
5935-00-449-7747	12	2
5985-00-459-1469	7	3
6150-00-495-1214	3	3
5805-00-543-0012	2	6
5310-00-543-4385	10	11
5310-00-595-7237	9	13
8130-00-656-1090	1	6
5930-00-660-5584	6	18
6240-00-669-6554	13	8
5925-00-681-4952	11	3
6145-00-683-5353	14	2
6625-00-752-8464	13	5
5935-00-762-1495	17	1
5935-00-762-1504	17	4
5935-00-763-6983	11	4
5310-00-809-4058	6	10
5935-00-823-0308	7	2
5935-00-823-0308	8	1
5820-00-824-0830	2	8
5820-00-824-0831	2	3
5995-00-877-6290	1	13
5805-00-878-3539	2	2
5805-00-884-2176	2	10
5965-00-892-3850	1	10
5820-00-892-3862	1	4
2540-00-892-6243	3	2
5950-00-892-8208	13	1
5935-00-903-8444	6	15
5935-00-903-8444	8	4
5915-00-909-7762	9	11
5805-00-926-2627	2	11
5935-00-926-3091	16	1
5820-00-930-8078	2	9
5805-00-930-8079	1	2
5995-00-935-2660	1	12
5995-00-935-2662	2	12
5995-00-935-2686	3	29
4030-00-951-4431	1	9
5935-00-958-9567	8	3
5310-00-965-1820	9	12
5935-00-999-6934	6	23
5830-01-008-3126	2	5
5935-01-024-4028	6	16
6210-01-034-1940	6	22
5935-01-043-0629	16	6
5935-01-043-6935	14	1
5935-01-058-9269	6	19
5935-01-058-9269	11	2
6145-01-062-9820	10	2
5985-01-080-7917	1	8
5820-01-081-5407	2	4
5820-01-082-0814	2	7
5925-01-099-8648	13	3
5820-01-110-2205	1	5
5820-01-110-2206	10	15
5935-01-110-2359	14	8
5935-01-110-2360	14	6
6210-01-110-3717	13	9
5935-01-110-6791	14	3
5935-01-110-7044	8	5
5925-01-111-7562	13	2
5411-01-116-7310	2	15
5975-01-122-5929	6	1

FSCM	PART NUMBER	FIGURE NO.	ITEM NO.
80058	AB-577/GRC	1	4
80058	AM-4319()/GRC-103(V)	2	4
80058	AM-4323()/GRC-103(V)	2	7
80058	AS-3047()/GRC-103(V)	1	8
80058	CG-3443/U(80FT)	1	7
80058	CV-1548/G	1	3
80058	CV-2500/GR	1	15
80058	CX-10763/GRC-103(V)	1	13
80058	CX-10879/GRC103V2-6	1	14
80058	CX-7453/U(100FT)	3	30
80058	CX-7705A/U(15FT)	3	29
80058	CY-6097/U	2	11
80058	DA-437()/GRC-103(V)	2	1
97403	DL13217E6150	1	5
80058	GP-113()/G	1	1
81349	HW-C10(105)U5	10	2
78998	H101G	1	9
81352	H156U	1	10
91836	KC-89-82	7	3
80058	LS-147(F)/F1	2	5
81349	MR36W100ACAAR	13	5
81349	MR36W150ACVVR	13	6
96906	MS24693-98	9	6
96906	MS25036-112	10	3
96906	MS25036-154	13	4
96906	MS25036-157	13	7
96906	MS25244-10	11	3
96906	MS27183-10	6	10
96906	MS27183-12	6	13
96906	MS27183-42	3	5
96906	MS3105-28	11	4
96906	MS3116F10-6P	17	4
96906	MS3116F12-10S	17	1
96906	MS3116J12-10P	16	1
96906	MS3116J12-8S	15	3
96906	MS3116J12-8S	16	3
96906	MS3116J14-19S	15	1
96906	MS3116J8-4S	16	4
96906	MS3119E-8-4	6	15
96906	MS3119E12-10	8	3
96906	MS3119E12-8	8	5
96906	MS3119E8-4	8	4
96906	MS35333-10	9	7
96906	MS35333-42	9	13
96906	MS35333-46	10	11
96906	MS35338-45	6	12
96906	MS35338-45	9	17
96906	MS51922-1	6	2
96906	MS51922-1	9	8
96906	MS51922-3	9	12
96906	MS90579-1375	1	11
96906	MS90579-1375	12	4
96906	MS90725-35	6	11
96906	MS90725-36	9	18
96906	MS90728-9	6	9
80058	MX-148/G	3	1

FSCM	PART NUMBER	FIGURE NO.	ITEM NO.
81349	M39012/16-0101	16	6
81349	M39012/16-0102	14	1
81349	M55339/13-00492	7	2
81349	M55339/13-00492	8	1
14949	PL-75-9	14	5
80058	R-1329(P)()/GRC-103(V)	2	3
80058	RC-435()/U	1	6
81349	RC-58C/U	16	7
81349	RG-58C/U	14	7
81349	RG-71B/U	14	2
80058	RT-773()/GRC-103(V)	2	2
80058	S-583()/TRC-151(V)	2	15
80063	SC-B-489705GR-1	10	10
80063	SC-B-539492	3	3
80063	SC-B-539504	6	24
80063	SC-B-681026	6	17
80063	SC-B-914267	3	6
80063	SC-B-947839	6	3
80063	SC-C-539495	6	25
80063	SC-C-595537	2	14
80063	SC-C-66291	1	16
80063	SC-C-784000	14	4
80063	SC-C-784004	15	2
80063	SC-C-784005	14	3
81349	SC-C-784173	7	1
80063	SC-C-784512	8	2
80063	SC-C-784526-1	14	8
80063	SC-C-784526-2	14	6
80063	SC-C-913783	2	13
80063	SC-C-913825	12	5
80063	SC-C-913926	6	8
80063	SC-C-913927	6	4
80063	SC-C-913929	6	7
80063	SC-C-913930	6	6
80063	SC-C-913931	6	1
80063	SC-C-913953	9	9
80063	SC-C-913954	9	4
80063	SC-C-913975	12	1
80063	SC-C-913981	17	3
80063	SC-C-914849	10	1
80063	SC-D-108737	3	2
80063	SC-D-681036	6	22
80063	SC-D-681143	9	11
80063	SC-D-681151	11	5
80063	SC-D-681633	6	21
80063	SC-D-784100-955	4	27
80063	SC-D-784100-956	4	21
80063	SC-D-784101-000	3	12
80063	SC-D-784101-005	3	11
80063	SC-D-784101-010	3	10
80063	SC-D-784101-015	3	9
80063	SC-D-784101-020	4	17
80063	SC-D-784101-025	4	4
80063	SC-D-784101-030	4	8
80063	SC-D-784101-035	4	6
80063	SC-D-784101-190	3	26
80063	SC-D-784101-195	3	28
80063	SC-D-784101-200	3	19
80063	SC-D-784101-205	3	21
80063	SC-D-784101-210	4	12
80063	SC-D-784101-215	4	5
80063	SC-D-784101-220	4	9
80063	SC-D-784101-225	4	7
80063	SC-D-784106-015	4	18
80063	SC-D-784106-030	4	10
80063	SC-D-784106-040	3	16
80063	SC-D-784106-045	3	15
80063	SC-D-784106-050	3	14
80063	SC-D-784106-090	4	14
80063	SC-D-784106-105	4	16
80063	SC-D-784106-115	3	18
80063	SC-D-784106-120	3	20
80063	SC-D-784106-125	3	22
80063	SC-D-784108-005	3	13
80063	SC-D-784108-020	3	17
80063	SC-D-784108-035	4	2
80063	SC-D-784108-125	3	24
80063	SC-D-784108-140	3	23
80063	SC-D-784108-155	4	3
80063	SC-D-784113-005	4	15
80063	SC-D-784113-020	4	19
80063	SC-D-784113-125	4	11
80063	SC-D-784113-140	4	13
80063	SC-D-784124	4	26
80063	SC-D-784125	4	22
80063	SC-D-784126	4	20
80063	SC-D-784127	4	28
80063	SC-D-913780	5	1
80063	SC-D-913781	6	27
80063	SC-D-913782	10	15
80063	SC-D-913790	9	16
80063	SC-D-913791	10	8
80063	SC-D-913804	9	15
80063	SC-D-913814	6	5
80063	SC-D-913822	10	9
80063	SC-D-913824	10	7
80063	SC-D-913924	10	4
80063	SC-D-913949	10	13
80063	SC-D-913950	10	14
80063	SC-D-913951	9	2
80063	SC-D-913955	10	12
80063	SC-D-913967	4	1
80063	SC-D-913971-002	3	25
80063	SC-D-913971-002	3	27
80063	SC-D-913972	9	3
80063	SC-D-913973	10	5
80063	SC-D-913978	6	14
80063	SC-D-914087	9	5
80063	SC-D-914091	5	2
80063	SC-D-914266	3	4
80063	SC-D-914421	10	6
80063	SC-D-914435-002	12	3
80063	SC-D-914645	9	1
80063	SC-D-914670	9	14
80063	SC-D-914831	5	3
80063	SCB598923	12	2
80063	SM-A-698804-1	17	5
80063	SM-A-698804-2	17	2
80058	T-983(P)()/GRC-103(V)	2	8
80058	TA-312/PT	2	6
80058	TD-202/U	2	10
80058	TD-660/G	1	2
80058	TD-754/G	2	9
81349	TYPE IIA	3	7
81349	TYPE III,CL3	3	8
81349	UG-238()/U	11	1
81348	W-C-596/40-2	11	2
81348	W-L-142	6	20
81348	WC375/01-003	13	2
81348	WC375/02-009	13	3
81348	WC596/40-2	6	19
81348	WC596/41-2	6	16
81349	WF-11A/U	15	4
81349	WF-11A/U	16	5
81349	WM-62A/U	16	2
81348	WS896/2-02A	6	18
19738	1604-0615	9	10
93993	3CT11B	13	1
72619	37-0408-0337-245	13	9
90073	456-095	1	12
90073	456-250	2	12
75582	5225	6	23
80204	6AC	13	8

LATEST PART NUMBER ASSIGNMENTS

FSCM	PART NUMBER	FIGURE NO.	ITEM NO.
80063	SC-D-784124	4	23
80063	SC-D-784127	4	25
80063	SC-D-784100-955	4	24

RECOMMENDED CHANGES TO EQUIPMENT TECHNICAL PUBLICATIONS

SOMETHING WRONG WITH THIS PUBLICATION?

FROM (PRINT YOUR UNIT'S COMPLETE ADDRESS)
Commander
Stateside Army Depot
ATTN: AMSTA-US
Stateside, N.J. 07703

DATE SENT
10 July 1975

PUBLICATION NUMBER	PUBLICATION DATE	PUBLICATION TITLE
TM 11-5840-340-12	23 Jan 74	Radar Set AN/PRC-76

BE EXACT PIN-POINT WHERE IT IS

PAGE NO	PARA-GRAPH	FIGURE NO	TABLE NO	IN THIS SPACE TELL WHAT IS WRONG AND WHAT SHOULD BE DONE ABOUT IT:
2-25	2-28			Recommend that the installation antenna alignment procedure be changed throughout to specify a 2° IFF antenna lag rather than 1°. REASON: Experience has shown that with only a 1° lag, the antenna servo system is too sensitive to wind gusting in excess of 25 knots, and has a tendency to rapidly accelerate and decelerate as it hunts, causing strain to the drive train. Hunting is minimized by adjusting the lag to 2° without degradation of operation.
3-10	3-3		3-1	Item 5, Function column. Change "2 db" to "3db." REASON: The adjustment procedure the the TRANS POWER FAULT indicator calls for a 3 db (500 watts) adjustment to light the TRANS POWER FAULT indicator.
5-6	5-8			Add new step f.1 to read, "Replace cover plate removed in step e.1, above." REASON: To replace the cover plate.
		F03		Zone C 3. On J1-2, change "+24 VDC to "+5 VDC." REASON: This is the output line of the 5 VDC power supply. +24 VDC is the input voltage.

PRINTED NAME, GRADE OR TITLE, AND TELEPHONE NUMBER
SSG I. M. DeSpiritof 999-1776

SIGN HERE
SSG I. M. DeSpiritof

DA FORM 1 JUL 79 2028-2

PREVIOUS EDITIONS ARE OBSOLETE.

P.S.--IF YOUR OUTFIT WANTS TO KNOW ABOUT YOUR RECOMMENDATION MAKE A CARBON COPY OF THIS AND GIVE IT TO YOUR HEADQUARTERS

TEAR ALONG PERFORATED LINE

RECOMMENDED CHANGES TO EQUIPMENT TECHNICAL PUBLICATIONS

THEN...JOT DOWN THE DOPE ABOUT IT ON THIS FORM. CAREFULLY TEAR IT OUT, FOLD IT AND DROP IT IN THE MAIL.

SOMETHING WRONG WITH THIS PUBLICATION?

FROM: (PRINT YOUR UNIT'S COMPLETE ADDRESS)

DATE SENT

PUBLICATION NUMBER	PUBLICATION DATE	PUBLICATION TITLE
TM 11-5820-894-24P	26 October 1982	Radio Terminal Set AN/TRC-151(V)

BE EXACT PIN-POINT WHERE IT IS

PAGE NO.	PARA-GRAPH	FIGURE NO.	TABLE NO.

IN THIS SPACE TELL WHAT IS WRONG AND WHAT SHOULD BE DONE ABOUT IT:

PRINTED NAME GRADE OR TITLE AND TELEPHONE NUMBER

SIGN HERE

DA FORM 1 JUL 79 2028-2

PREVIOUS EDITIONS ARE OBSOLETE

P.S.--IF YOUR OUTFIT WANTS TO KNOW ABOUT YOUR RECOMMENDATION MAKE A CARBON COPY OF THIS AND GIVE IT TO YOUR HEADQUARTERS.

TEAR ALONG PERFORATED LINE

REVERSE OF DA FORM 2028-2

FILL IN YOUR UNIT'S ADDRESS

FOLD BACK

DEPARTMENT OF THE ARMY

POSTAGE AND FEES PAID
DEPARTMENT OF THE ARMY
DOD 314

OFFICIAL BUSINESS
PENALTY FOR PRIVATE USE $300

TEAR ALONG PERFORATED LINE

Commander
US Army Communications-
Electronics Command
ATTN: DRESL-ME-MP
Fort Monmouth, New Jersey 07703

RECOMMENDED CHANGES TO EQUIPMENT TECHNICAL PUBLICATIONS

SOMETHING WRONG WITH THIS PUBLICATION?

THEN...JOT DOWN THE DOPE ABOUT IT ON THIS FORM. CAREFULLY TEAR IT OUT, FOLD IT AND DROP IT IN THE MAIL.

FROM: (PRINT YOUR UNIT'S COMPLETE ADDRESS)

DATE SENT

PUBLICATION NUMBER	PUBLICATION DATE	PUBLICATION TITLE
TM 11-5820-894-24P	26 October 1982	Radio Terminal Set AN/TRC-151(V)

BE EXACT PIN-POINT WHERE IT IS

PAGE NO.	PARA-GRAPH	FIGURE NO.	TABLE NO.

IN THIS SPACE TELL WHAT IS WRONG AND WHAT SHOULD BE DONE ABOUT IT:

PRINTED NAME GRADE OR TITLE AND TELEPHONE NUMBER

SIGN HERE

TEAR ALONG PERFORATED LINE

DA FORM 1 JUL 79 2028-2

PREVIOUS EDITIONS ARE OBSOLETE

P.S.--IF YOUR OUTFIT WANTS TO KNOW ABOUT YOUR RECOMMENDATION MAKE A CARBON COPY OF THIS AND GIVE IT TO YOUR HEADQUARTERS.

REVERSE OF DA FORM 2028-2

FILL IN YOUR UNIT'S ADDRESS

FOLD BACK

DEPARTMENT OF THE ARMY

POSTAGE AND FEES PAID
DEPARTMENT OF THE ARMY
DOD 314

OFFICIAL BUSINESS
PENALTY FOR PRIVATE USE $300

TEAR ALONG PERFORATED LINE

Commander
US Army Communications-
Electronics Command
ATTN: DRESL-ME-MP
Fort Monmouth, New Jersey 07703

RECOMMENDED CHANGES TO EQUIPMENT TECHNICAL PUBLICATIONS

THEN...JOT DOWN THE DOPE ABOUT IT ON THIS FORM. CAREFULLY TEAR IT OUT, FOLD IT AND DROP IT IN THE MAIL.

SOMETHING WRONG WITH THIS PUBLICATION?

FROM: (PRINT YOUR UNIT'S COMPLETE ADDRESS)

DATE SENT

PUBLICATION NUMBER	PUBLICATION DATE	PUBLICATION TITLE
TM 11-5820-894-24P	26 October 1982	Radio Terminal Set AN/TRC-151(V)

BE EXACT PIN-POINT WHERE IT IS

PAGE NO.	PARA-GRAPH	FIGURE NO.	TABLE NO.

IN THIS SPACE TELL WHAT IS WRONG AND WHAT SHOULD BE DONE ABOUT IT:

PRINTED NAME GRADE OR TITLE AND TELEPHONE NUMBER

SIGN HERE

DA FORM 1 JUL 79 2028-2

PREVIOUS EDITIONS ARE OBSOLETE

P.S.--IF YOUR OUTFIT WANTS TO KNOW ABOUT YOUR RECOMMENDATION MAKE A CARBON COPY OF THIS AND GIVE IT TO YOUR HEADQUARTERS.

TEAR ALONG PERFORATED LINE

REVERSE OF DA FORM 2028-2

FILL IN YOUR UNIT'S ADDRESS

FOLD BACK

DEPARTMENT OF THE ARMY

POSTAGE AND FEES PAID
DEPARTMENT OF THE ARMY
DOD 314

OFFICIAL BUSINESS
PENALTY FOR PRIVATE USE $300

Commander
US Army Communications-
Electronics Command
ATTN: DRESL-ME-MP
Fort Monmouth, New Jersey 07703

TEAR ALONG PERFORATED LINE

By Order of the Secretary of the Army:

E. C. MEYER
General, United States Army
Chief of Staff

Official:
ROBERT M. JOYCE
Major General, United States Army
The Adjutant General

☆U.S. GOVERNMENT PRINTING OFFICE: 1990 - 262-912/30072