TM 55-271

WAR DEPARTMENT TECHNICAL MANUAL

U.S. Dept. of Army

OPERATION OF RAILROADS

DIESEL-ELECTRIC LOCOMOTIVES

WAR DEPARTMENT • WASHINGTON 25, D.C.
NOVEMBER 1944

WAR DEPARTMENT TECHNICAL MANUAL

TM 55-271

OPERATION OF RAILROADS

DIESEL-ELECTRIC LOCOMOTIVES

WAR DEPARTMENT • NOVEMBER 1944

WAR DEPARTMENT
Washington 25, D.C., 13 Nov. 1944

TM 55–271, *Operation of Railroads, Diesel-Electric Locomotives,* is published for the information and guidance of all concerned.

[A. G. 300.7 (13 Nov. 44)]

BY ORDER OF THE SECRETARY OF WAR:

G. C. MARSHALL
Chief of Staff

OFFICIAL:
J. A. ULIO
Major General
The Adjutant General

DISTRIBUTION:

AAF (5); AGF (5); ASF (5); Arm & Sv Bd (2); T of Opn (5); Base (2); Dept (2); Tech Sv (2); SvC (2); PC&S (2); PC&S, Trans O (2); PE (5); H&R (2); TZ (2); Zone Trans O (5); Zone Trans O (Zone Master Mechanic) (5); Gen & Sp Sv Sch (2); USMA (2); Dist, 55 (1); Consol Sta (1); TCRRS (10); A (2); D (2); T/O & E 55–202 (10); 55–228 (10); 55–237 (10); 55–302 (10).

For explanation of symbols, see FM 21–6.

PREFACE

MUCH progress has been made in Diesel Engineering since Dr. Rudolf Diesel proposed to compress pure air in the cylinders of an internal-combustion engine, and to inject the fuel—in this case, at first, crude oil—when the end of the compression stroke was reached.

That proposal passed unnoticed for a while in the field of American transportation as the gasoline engine was being developed as motive power for the automobile. Hence the Diesel engine had to wait, and only in recent years has it begun to come into its own as an improved form of motive power for railway transportation.

Today Diesel-electric locomotives are in service on many railroads in this and other countries, and their development and use are progressing at a rapid rate. Ever since the Diesel was first designed for heavy duty, recognition of its value and reliability for the purposes of industry and transportation has been increasing. With the demand for Diesel engines has grown the parallel demand for men willing to learn how to operate, service, and maintain them.

In this book, electrical and mechanical aspects of the Diesel-electric locomotives are considered with emphasis on the application of the Diesel locomotive. A series of questions and answers on the latter will test the student's understanding of factors involved in choosing the most suitable locomotive for the job at hand.

CONTENTS

Chapter 1

Introduction

WHAT IS A DIESEL-ELECTRIC LOCOMOTIVE? In the early days of the development of the Diesel-electric locomotive, a Diesel engine of the heavy-duty, stationary type was the only engine available. A direct-current generator was attached to the crankshaft of this engine, mounted on the underframe of an electric interurban streetcar. The result was a very inefficient unit because, although the Diesel engine ran at full speed most of the time, the generator did not match the traction motors.

The modern and efficient Diesel-electric engine is especially built for locomotive service with its varying operating conditions. The generator and traction motors match each other perfectly, and the engine generator unit is built into a specially designed streamlined locomotive chassis.

The modern Diesel-electric locomotive is a very economical unit with all parts properly coordinated for the sole purpose of handling freight or passenger railroad equipment.

THREE CLASSES OF SERVICE. Diesel locomotives are used in three classes of service:

(1) Switching,
(2) Road and Switching, and
(3) Road Passenger and Freight Service.

As the Army does not use Diesel-electric locomotives exclusively in road service, only the first two items will be discussed. Fig. 1 shows a Diesel-electric locomotive used for passenger service.

(1) Switching Service. In times of war, much of the military trackage is quickly laid, even in large army depots, and for this reason the Diesel-electric locomotive is especially suited for switching service because of its equal weight distribution. The Diesel-electric locomotive has a comparatively light axle load. Its trucks have a short wheel base allowing the Diesel to go around curves which the steam switcher cannot negotiate since the latter's driving wheels are mounted in line. Note Fig. 2.

Fig. 1. Diesel-Electric Passenger Locomotive, 4,000 Horsepower, for "Super Chief," Transcontinental Train (A and B Unit, 2,000 Horsepower Each)

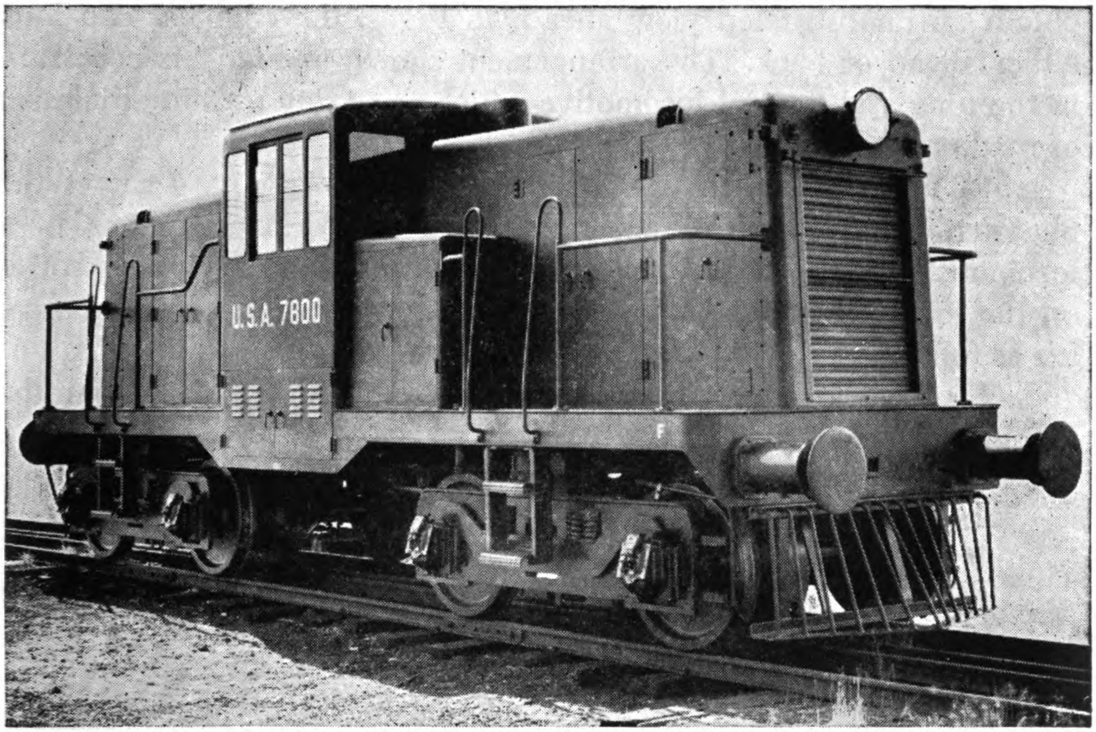

Fig. 2. Diesel-Electric Switching Locomotive, 45-Ton, 380 Horsepower, 66-Inch Gauge

(2) Road and Switching. Certain Diesel-electric locomotives are especially constructed for road and switching service. Note Fig. 3. These locomotives are known as *Road Switchers.* Not only can they operate on a 500- or 1000-mile through run but they are also designed to handle all necessary switching along the line, which may require the locomotive to go into sidings with sharp curves or into areas where light axle loads are required, especially in desert regions.

It is interesting to compare the road switcher of Fig. 3 with the road unit of Fig. 1. In Fig. 1, the engineer is located so that he can

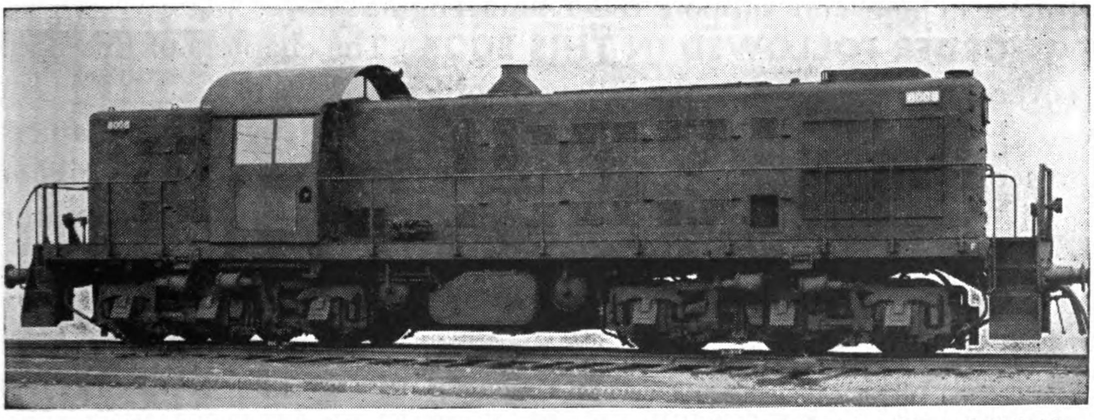

Fig. 3. 1,000 Horsepower Road Locomotive Equipped with 6-Wheel Trucks (Type 0-6-6-0)

obtain an unobstructed view ahead; in Fig. 3 the engineer can look either ahead or back. The arrangement shown in Fig. 3 is necessary in the universal type of locomotive which the Army uses in all classes of road or yard service.

SECTIONS OF THE DIESEL LOCOMOTIVE. Fig. 4 shows the phantom view of the Diesel engines and electrical equipment of a locomotive such as Fig. 2, while Fig. 5 shows many of the accessories on the locomotive. The four major sections of the Diesel locomotive are as follows:

(1) Electrical equipment which transmits the power from the Diesel engine to the wheels.

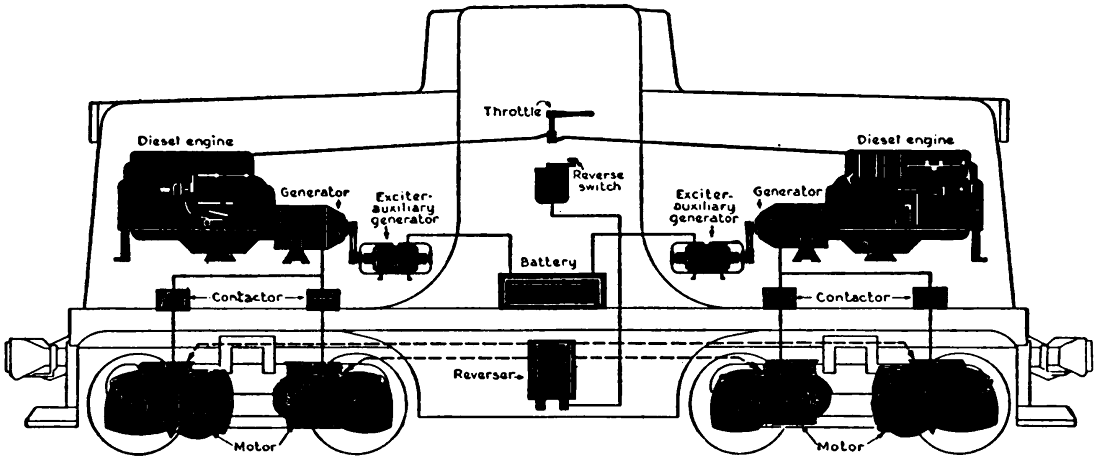

Fig. 4. Phantom View of Diesel Engine and Electrical Equipment

(2) One or more Diesel engines which furnish the primary power.

(3) Miscellaneous accessories such as the bell, air brakes, radiator, sand boxes, etc.

(4) One or two trucks to keep the driving wheels on the rails together with an underframe and cab which are used to hold the trucks in line and support the Diesel engine power plants.

ORDER FOLLOWED IN THIS BOOK. The chapters of this book cover these four items in the following order.

First, the electrical equipment is described, giving the fundamentals of electricity and the fundamentals of the electric transmission and its equipment. The electric equipment consists of a generator, traction motors, and control. The generator, connected directly to the engine, is absorbing the entire output of the engine crank shaft coupling. The electric power from the generator passes into one or more of the traction motors which are geared to the axle of the driving wheels. The control system includes the control wires and contactors or switches which carry the power from the generators to the motors.

The fundamentals of the Diesel engine are described next. The Diesel engine is so universally used now that many are familiar with its principles. Instead of burning gasoline, it burns fuel oil of a grade selected for Diesel engines; instead of having spark plugs in the cylinder heads, it has fuel-oil injector nozzles. As will be explained later in detail, the explosion is caused by injecting the fuel oil into the cylinder at a moment when the piston is at the top of compression stroke. The oil sprayed into the extremely hot compressed air causes the explosion which forces the piston down.

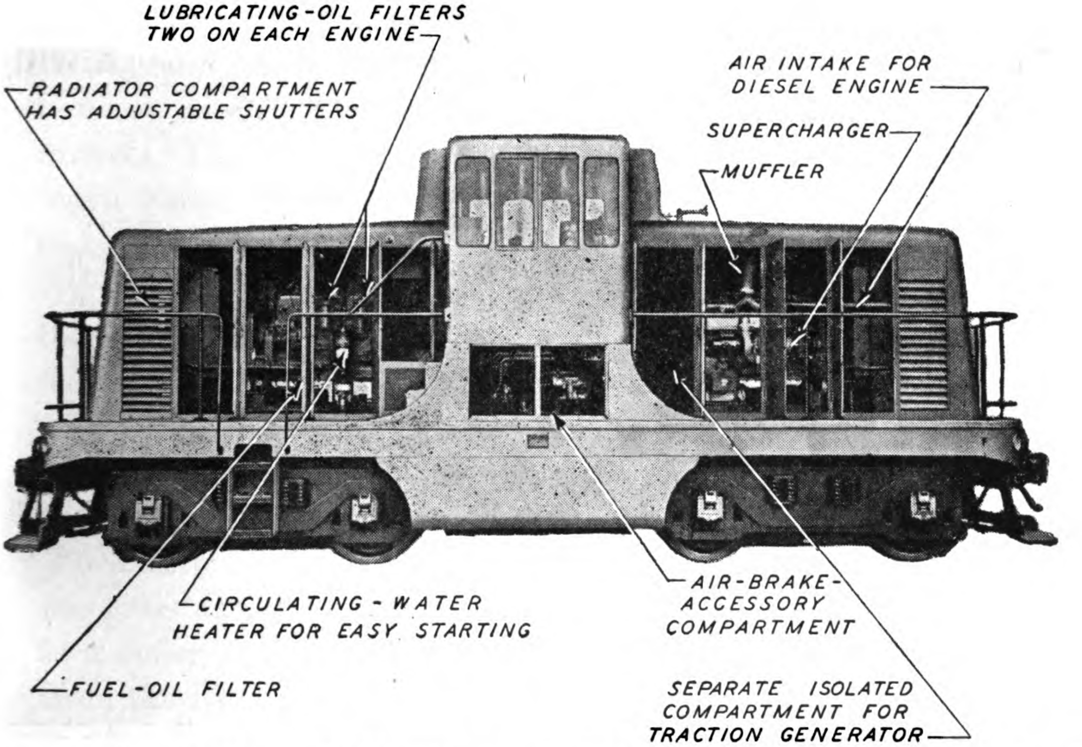

Fig. 5. Complete 65-Ton, 400 Horsepower Diesel Locomotive Showing Location of Auxiliaries

Diesel and other locomotive accessories are next described, and then trucks and mechanical portion of locomotives are referred to.

The last two chapters explain the fundamentals of locomotive operation and application.

These chapters will assist a supervising official properly to apply the locomotive to the job. PROPERLY APPLYING THE LOCOMOTIVE TO THE JOB IS EXTREMELY IMPORTANT. For each specific type of Diesel locomotive, the schedules, tonnage limitations, speed limits, and slow-downs for each yard or division of the main track are specified by the supervising official.

It may be found that the existing locomotive will not handle the job, and the supervising official will have to request that a different type or size of locomotive be sent to him. In this case, it will be necessary for the official to specify correctly the proper type and size of locomotive to handle the work.

Once the proper locomotive has been provided, it is up to the engineer and crew to live up to the specified limitations, using the locomotives to the best advantage in getting the trains through without overloading or injuring the locomotive in any way.

Chapter 2

Elementary Electricity

What is Electricity? This is a question that is often asked but it is usually never satisfactorily answered. The reason for this is because electricity cannot be seen, heard, or handled like other objects. This makes it impossible to learn about electricity as you learn about other objects. Undoubtedly the simplest answer to the question is: "Electricity is a form of energy."

What is energy? When the sun shines bright, it is warmer than on a cloudy day. This invisible "something" in the sunlight is energy. When the sunlight strikes the earth, this energy is turned into heat that warms the ground. On cloudy days there is not as much of this energy striking the earth, and the day is usually cooler than when the sun is shining brightly.

This energy from the sun, when it is turned into heat, causes the grass and trees to grow. When trees are cut down and burned in a boiler, the energy from the wood is turned into heat. The heat from the flames turns the water in the boiler into steam. Steam is another form of energy.

A steam engine or steam turbine will change this energy from the steam into mechanical energy. Mechanical energy can be used to run any machine connected by the use of belts and pulleys to the steam engine or turbine. An electric generator can be connected to a steam engine or turbine, and the mechanical energy produced by these machines is turned into another form of energy which is known as electrical energy, or electricity.

ELECTRIC CURRENT

When it rains what becomes of the water that falls on the roof of the house? It runs off the roof on to the eaves, then into the trough or gutter, and from there through a connected pipe down the side of the building. The trough and the connected pipe direct the flow of water to the desired place.

To direct the flow of electricity to the desired place, a copper wire is usually used. This flow of electricity, which is called electric current, flows through the copper wire just like water flows through the pipe down the side of the building. Electricity, however, is not a liquid, even though practical electricians often refer to it as "the juice" and in closing a switch they will speak of "turning on the juice." However, in order to understand the flow of electric current, which cannot be seen, it must be compared with something that can be seen or understood, and for this reason the flow of water will be used to illustrate the flow of electric current.

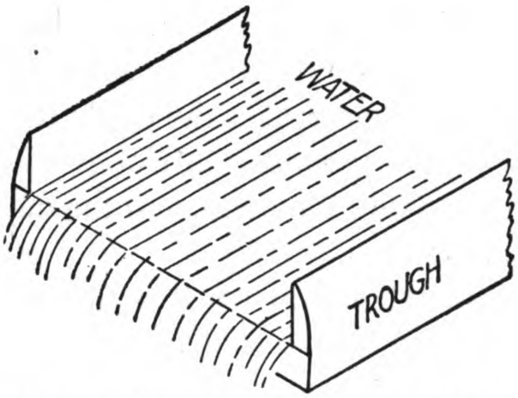

Fig. 1. Trough Used to Determine Rate of Flow of Water

AMPERE OR UNIT OF CURRENT

What becomes of the water on top of the hill when it rains? It runs down the hill into a ditch. Ditches are not the same size. Some ditches are small and some are very large. Some ditches have very little water in them, and some are nearly full. This statement gives us some idea as to the amount of water flowing in the different streams. It is not very accurate, however, because a large ditch may have only a small amount of water in it, while a small ditch may be nearly full. In order to measure the flow of water in a ditch or stream, an engineer would use an arrangement like the one shown in Fig. 1. The rate of flow of water would be expressed as so many gallons per minute or cubic feet per second.

The same condition is true in regard to electricity. It is necessary, however, to have some word to express the **rate of flow of electric current.** This word is **ampere** (pronounced am-peer). When speaking in terms of electricity we say that the rate of flow of current is so many amperes, as, for example, 1 ampere, 2 amperes, 5 amperes, 10 amperes, 100 amperes, or 1000 amperes, as the case may be. If there are 5 amperes flowing in one wire and 10 amperes flowing in another wire, there is twice as much current flowing through the second wire as the first. Therefore, whenever you see the word **ampere,** it means the rate of flow of current, which is similar to the water flowing in a trough shown in Fig. 1.

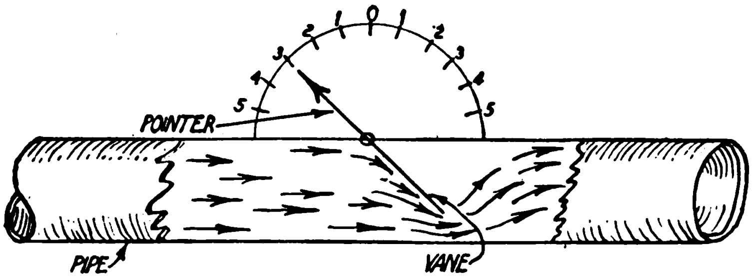

Fig. 2. A Device Which Shows the Rate of Flow of Water through a Pipe

AMMETER

In order to measure the rate of flow of water through a pipe, it is necessary to place something in the pipe that will indicate this rate of flow. This can be done with the device shown in Fig. 2, which could be called a flowmeter. This device consists of a sheet of iron, called a vane, which is placed inside the pipe and hinged to the top of the pipe. The vane is of such size that it will completely close the opening in the pipe. A pointer on the outside of the pipe is fastened to the vane to show its position in the pipe. A spring (not shown) will cause the vane to close the opening in the pipe when there is no water flowing through the pipe. The pointer will then point to zero. Therefore, the greater the amount of water that flows through the pipe, the greater will be the swing of the vane, as shown in Fig. 2, and the pointer will move accordingly opposite a larger number on the dial of the flowmeter.

The device used to measure the rate of flow of electric current was at first called an ampere-meter, because it showed the rate of flow of electric current in amperes. As this name, ampere-meter, was rather long, it was shortened to ammeter. A view of an ammeter is shown in Fig. 3. An ammeter is always connected in series so the current will flow into the meter at one terminal, then through the meter, and out of the meter at the other terminal.

PRESSURE

When it rains, the water runs off the side of a hill and into a ditch, because water always runs down hill. But why does water always run down hill? Because water has weight, and the weight of the water above tends to push the water that is below out of its way. This weight of water above, tending to squeeze or push the water below, produces a pressure. And the greater the height of the water above a point, the greater is the pressure. This you have undoubtedly noticed if you have ever tried to stop the flow of water from a pipe connected to a high tank or from a water faucet by placing your hand over the end of the pipe or faucet. You remember that the water squirted out around your hand, and the pressure was very strong, much stronger than from the bottom of a tank. This shows that it is the pressure which forces the water through the pipe of a water system or pipe line. It is this pressure which forces the water from the pumping station into an overhead tank and carries it through the underground pipes to the faucets in our homes.

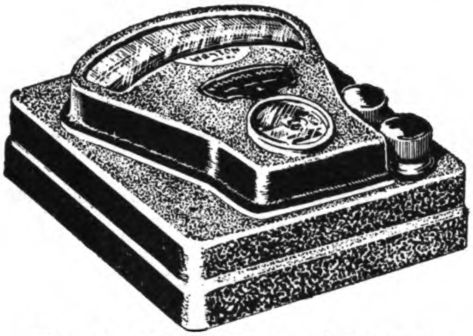

Fig. 3. Outside View of Ammeter

VOLTS OR ELECTRICAL PRESSURE

Electric current flows through a wire or conductor on the same principle that water flows through a pipe. We have found that it is **pressure** that causes water to flow through a pipe. Therefore, it is **pressure** that causes electric current to flow through a wire or conductor—except that with the electric current it is an **electrical pressure.** Where does this electrical pressure come from? It comes from dry cells, wet cells, storage batteries, and electrical generators.

VOLT

The electrical pressure produced by a dry cell, a storage battery, or an electric generator is not always the same. An electrical generator can be designed and built to produce almost any desired pressure. The word used to express electrical pressure is **volt.** The electrical pressure of a dry cell is 1½ volts; that of an automobile storage battery is about 6 volts; that of the electric current used to furnish light in our homes is about 110 to 120 volts; the electrical pressure of the big transmission or power lines run through the country from one city to another is 33,000 volts, 66,000 volts, or 132,000 volts.

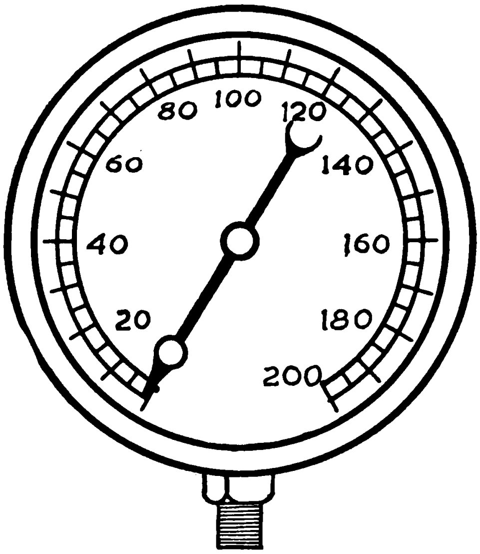

Fig. 4. Steam or Water Pressure Gauge

VOLTMETER

A pressure gauge is placed on every steam boiler in order to know the pressure inside of the boiler. This gauge enables the fireman to know whether he has enough fire in the boiler to produce the necessary pressure of steam. At the waterworks, or pumping station, a pressure gauge like the one shown in Fig. 4, is connected to the pipe line, in order that the person operating the pump can tell whether there is sufficient pressure to force the water through the pipe. Every automobile owner has a little pressure gauge which he uses to test the pressure of air in the automobile tires.

Electrical pressure, which forces an electric current through a wire, is determined by a device which is called a **voltmeter,** Fig. 5. This device is called a voltmeter because it shows the electrical pressure in volts. You will notice that the outside view of the voltmeter shown in Fig. 5 is very similar to the ammeter shown in Fig. 3. In fact, the manufacturers often use the same kind of cover for both voltmeters and ammeters. The word volts, voltmeter, amperes, or ammeter is usually printed on the front of the meter in order to tell whether it is to be used as a voltmeter or an ammeter.

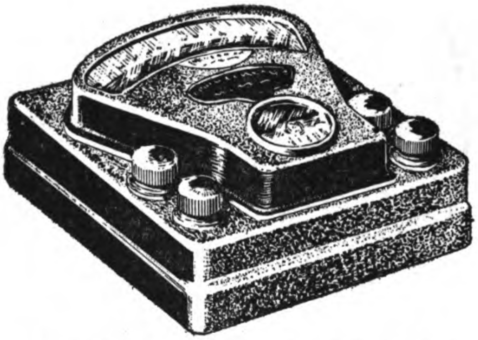

Fig. 5. Outside View of Voltmeter

Another word that is more often used in electrical work when referring to electrical pressure is **voltage.** Instead of speaking of the electrical pressure forcing the current through a wire, we usually speak of it as the **voltage.** Also, instead of speaking of the electrical pressure of a certain generator, we usually speak of the **voltage** of this generator.

RESISTANCE

We have seen that when it rains, the water runs off the side of a hill into a small ditch, and then several of these small ditches unite and form a larger ditch. Several of the larger ditches finally unite and form a still larger ditch. The water flows into these ditches instead of over the surface of the ground, because the ditches do not hold the water back but provide an easy place for it to flow.

There are some metals or substances that allow electric current to flow through them easier than through other substances. Every substance or metal, however, has a tendency to resist or hold back the electric current to some extent from flowing through it, just as the banks of the ditches resist the tendency of the water to flow out of the ditches.

OHM OR UNIT OF RESISTANCE

In order to be able to compare the resistance of the flow of electric current offered by one metal or substance with that offered by another metal or substance, it is necessary to have a word that will describe this property, just as we use the inch or foot when referring to the length of an object.

The electrical word used to compare the resistance offered to the flow of electricity by one substance with another is the **ohm.** Thus, we speak of the resistance of a radio rheostat, Fig. 6, as being 10 ohms, 20 ohms, 30 ohms, and so forth. This means that the rheostat having a resistance of 20 or 30 ohms will offer two or three times as much opposition to the flow of electric current as the 10-ohm rheostat. In electrical work whenever we see the word **ohm,** we think of resistance, because that word is used in speaking of the ability of any substance or object to resist or hold back the flow of electric current. The higher the resistance, the greater is the holding back power.

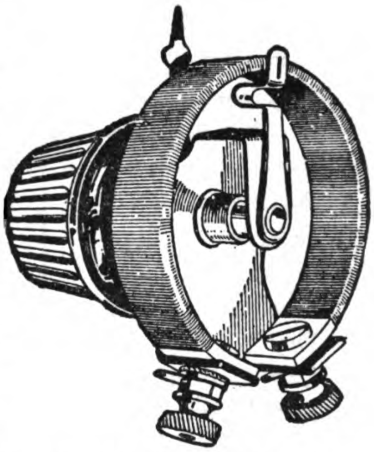

Fig. 6. Radio Rheostat

INSULATORS AND CONDUCTORS

If you pour a pail of water into a hollow spot in a pile of broken rock or large gravel, Fig. 7, you will find that the water seeps through the crevices of the rock and disappears very quickly; if you pour a pail of water in a hollow spot in a pile of sand, the water disappears slowly; while if you pour a pail of water into a hollow spot in a pile of clay, Fig. 8, the water will remain for a day or two before it disappears in the clay. Therefore, it is evident that the clay offers a higher or greater resistance to the passage of water through it than the sand or gravel offers.

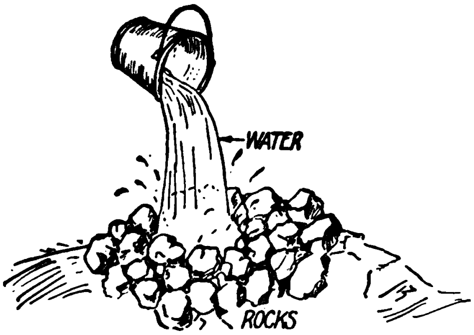

Fig. 7. Pouring Water on a Pile of Rocks

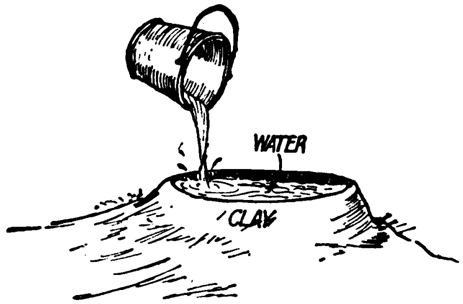

Fig. 8. Pouring Water on a Pile of Clay

TABLE I

Good Insulators (Very High Resistance)	Poor Insulators and Poor Conductors	Conductors
Porcelain	Moist Air	Water
Rubber	Carbon	Nichrome Wire
Glass	Wet Cotton	Steel
Marble	Wet Wood	Iron
Dry Air	Graphite	Tin
Dry Cotton		Zinc
Dry Wood		Aluminum
The resistance of the substance at the bottom of each column is lower than those higher up in the column.		Copper Silver } Good Conductors (Very Low Resistance)

Any substance that offers a very high or very great resistance to the passage of electric current through it is called an **insulator.** Porcelain offers a resistance to the passage of electric current through it that is 1,300,000,000,000,000,000,000 times as great as that of copper. Dry wood has a resistance that is more than 1,000,000,000,000 times as great as that of copper. Carbon has a resistance that is 2400 times as great as that of copper, while graphite has a resistance 500 times as great as that of copper. The resistance of

Nichrome wire, which is used in electric toasters, flatirons, and stoves, is about 66 times that of copper. The electrical resistance of copper wire is about $1\frac{1}{10}$ times that of silver; of aluminum, 2 times that of silver; and of iron and steel, about 7 to 10 times that of silver.

Silver is the best electrical conductor but it is very expensive, its cost being many times that of copper. Aluminum, zinc, and tin are fair conductors but they cost much more than copper. Therefore, as copper is the cheapest electrical conductor, it is used almost entirely in electrical work for carrying an electric current. Thus, in electrical work whenever the word wire is written or spoken of, it means copper wire unless some other kind of metal or material is mentioned.

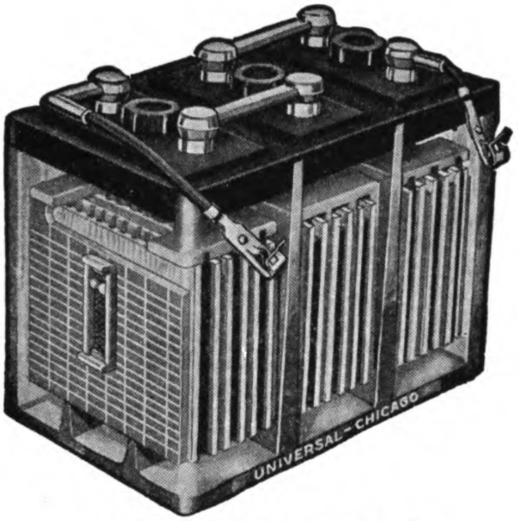

Fig. 9. Six-Volt Storage Battery

Table I gives a list of substances often used in electrical work as insulators or conductors. Thus, porcelain, rubber, glass, and so forth, are considered good insulators. Carbon, moist air, graphite, etc., are very poor insulators and also poor conductors. Carbon and graphite are sometimes used when it is desired that the conductor should have a very high resistance. Water and all common metals are classified as conductors in comparison with other substances. However, in comparing Nichrome wire with copper, the Nichrome wire would not be considered as good a conductor as copper. Table I will prove of assistance both in determining what to use as a conductor of electricity and what to use as an insulator of electricity.

SOURCES OF ELECTRIC CURRENT

While the action of electricity is probably explained better by the water analogy or illustration than by any other method, the student must not carry this too far or form any opinion that electricity has weight and density and all the other characteristics of water. However, the steady even flow in one constant direction of a water system is very similar to the flow of an electric current which is produced by a battery, Fig. 9.

Fig. 10. No. 6 Dry Cell

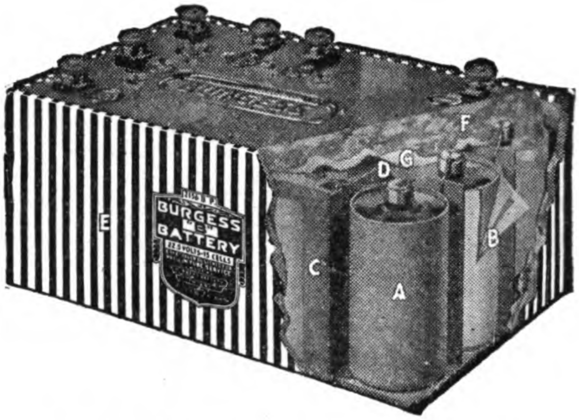

Fig. 11. Cutaway View of "B" Battery
A—Zinc can be made of pure metal; B—Wrapper around cell for insulation; C—Sealing material; D—Partition between cells prevents chafing and aids insulation; E—Waterproof insulating casing; F—Seal over top—strength and insulation; G—Webbing seal—adds strength.

BATTERY CURRENT—ELECTRICAL CURRENT BY CHEMICAL ACTION. You no doubt are familiar with the battery or dry cell used in radio work Figs. 10 and 11, or the small one used in the flashlight, Fig. 12. This type of dry cell produces a fixed voltage regardless of its size. The maximum voltage of any single cell is 1½ volts. Some flashlights are powered with two-cell and some with three-cell batteries.

The dry cell, Fig. 13, is not really dry, since the carbon plate is imbedded in a moist state contained in a cylindrical can made of zinc. The paste consists usually of crystals of ammonia chloride, three parts of plaster of Paris, one part of zinc oxide, one part of zinc chloride, and two parts of water. The plaster of Paris is used to give the paste rigidity. It is the action of the ammonia chloride on the zinc which produces the current of electricity.

In all batteries there is a chemical change of some of its parts going on during operation, and it is this change or consumption of materials caused by chemical action that furnishes the energy to drive an electric current through the cell and the bell, etc., to which it may be connected. *The path which the current of electricity takes from the battery, through the wires and bell or lamp, and back to the battery is called a circuit.* Fig. 14 shows a hydraulic system, starting with the centrifugal pump which pumps water through the pipes, drives the water wheel, and returns it by a pipe to the water reservoir. You will note that the water in the reservoir has traveled a complete circuit. Fig. 15 shows an electric circuit, starting from a battery, going along a wire to drive a small motor, and returning by another wire to the battery, thereby also making a complete circuit.

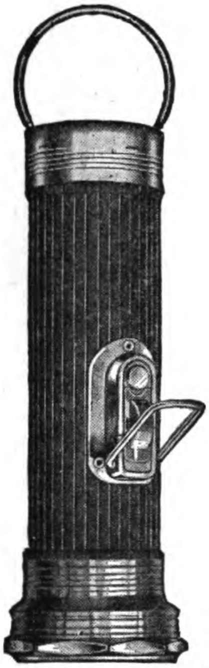

Fig. 12. Flash Light

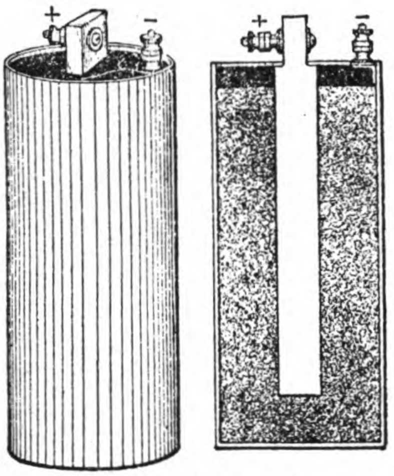

Fig. 13. Typical Dry Battery

When the switch is turned on, the flow of electricity from a dry cell or storage battery is from the positive terminal, often marked plus (+), along the circuit to the negative terminal, often marked minus (—). We find that this current flows steadily along the wires in the circuit in one constant direction, and the current will also come up to the full amount of amperes and stay at this point while the battery stands up to its rated pressure or until the circuit is disturbed, *so this current is a steady current and it is in one direction.*

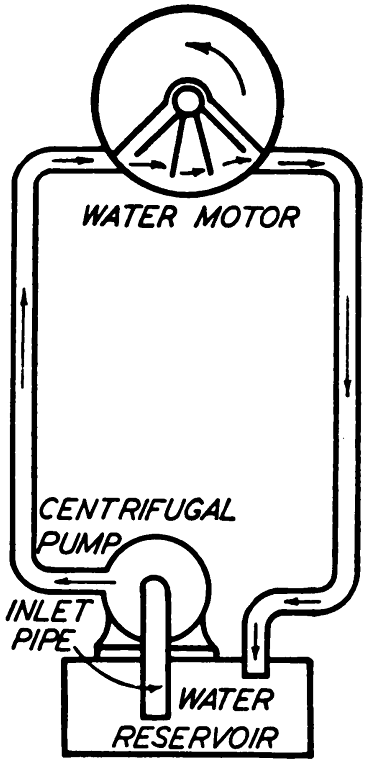

Fig. 14. Flow of Water through a Pipe System

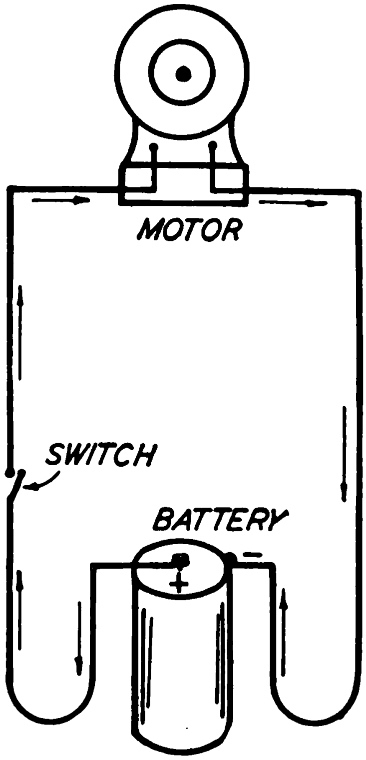

Fig. 15. Flow of Electric Current through a Circuit

The amount of current in a circuit is determined and limited by the capacity of the wires and devices to carry current in that circuit and not by any action or reaction of the battery. We must assume here, of course, a battery large enough to do the work properly. The pressure needed for a circuit is always examined before the selection of the battery. In doing this, careful checking of the voltage rating stamped upon the lamp or other device of the circuit must be made. When this battery is applied to the circuit, the voltage of the circuit will be the voltage of the battery and will be maintained at this pressure so long as the battery is not loaded beyond its capacity. Therefore, current has a constant voltage.

We can now see that a battery current has the following characteristics. *It flows in one direction; it is steady; and it has a constant voltage.*

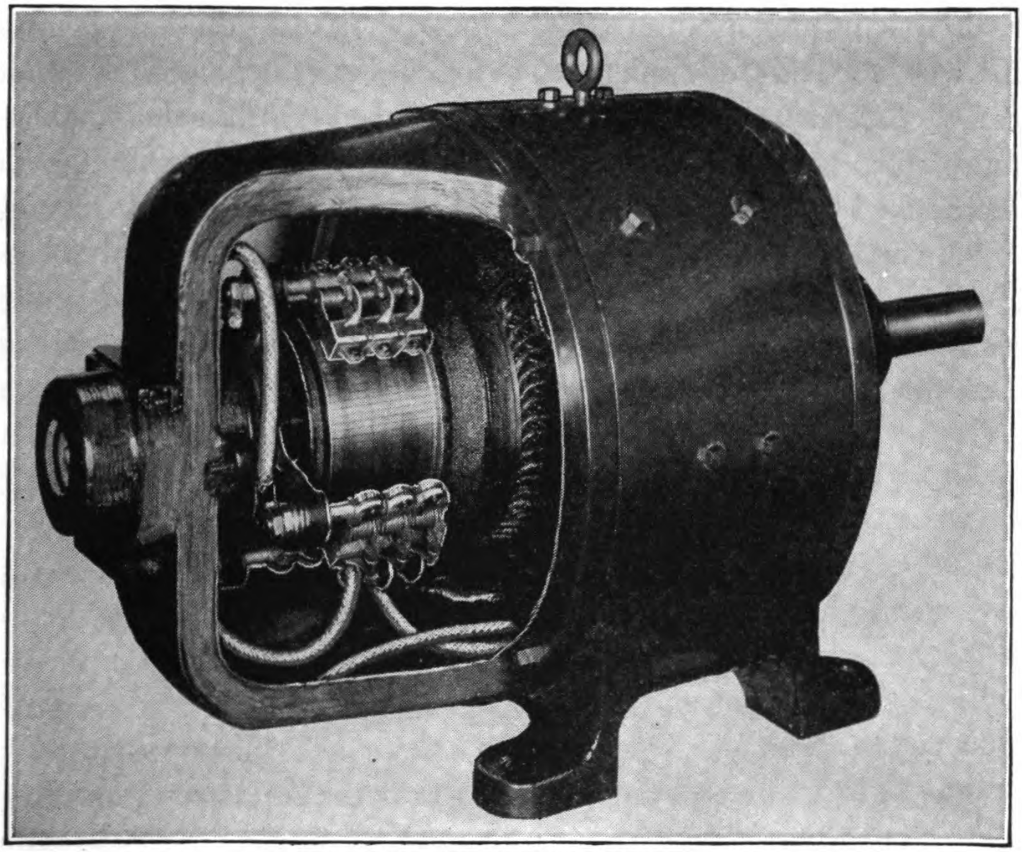

Fig. 16. Direct-Current Generator

ELECTRICAL CURRENT BY MECHANICAL ACTION. Electricity gradually came to be accepted in industry as its old uses were developed and new uses were found for it; and it became evident that the battery as a source of power was equal neither physically nor economically to the demand which was placed upon it. Bear in mind that the battery at this stage of development was not the highly perfected storage battery of today. It was not a storage battery at all, but a collection of many chemical cells. By the time the users of electricity began to realize that the battery was lacking as a source of power for the growing steady demands which were made upon it, the scientist in his laboratory had not been idle. He had discovered certain things about mechanical production of electricity.

In 1831, Farraday discovered that if a wire which had no current in it were moved through a magnetic field, a current would be induced or developed in the wire. Perhaps this does not mean much to you, perhaps it did not mean so much to the scientist who discovered it, but finally there came a time when test tubes and chemicals were set aside, and magnets, wires, and coils began to take their places. *Electricity was passing from the chemical into the dynamic stage,* thus was born the dynamo—the mechanical generator of electricity, Fig. 16. Today it is one of the most important machines of industry, for the mechanical generator is not confined in its development as the battery was, in fact, insulation is now practically the only limitation to extreme voltages which may be placed upon the building of generators.

Chapter 3

Ohm's Law

ELECTRICAL MEASUREMENTS. This brings us down to the point in the study of our electrical circuits where, if we wish to know definitely of these circuits, it is necessary to apply measurements to their separate parts. Perhaps you had not thought of the important part that measurements of any kind play in our economic advancement. Without the establishment of units and the use of these units in measurements and calculations, it would be impossible to build even the simple devices so necessary to our comfort and pleasure. This all applies to articles of furniture, to clothing, to the laying out and to building of roads as well. If these measurements are necessary in things so visible as these, it is equally as necessary with the more or less indefinable subject of electricity.

THREE FACTORS OF THE CIRCUIT. You have seen where the three important factors of the electric circuit are **pressure, current,** and **resistance.** These, however, are general terms and must be broken up into units for accurate handling in measurements. Just as the unit of distance in lineal measurement is the foot, and the unit of physical pressure is the pound, so the unit of electrical pressure is the volt. You, perhaps, could not define these units the foot and the pound (other than by breaking them up into smaller units), nor do you have to know the history of their origin in order to use them in accurate measurements. Nor will it be necessary, as far as the ordinary use in commercial work is concerned, for you to go into the history of this unit of electrical pressure and these other units of current and resistance. It is sufficient, for the present at least, for you to know that:

The **volt** is the **unit** of electrical **pressure.**
The **ampere** is the **unit** of electrical **current.**
The **ohm** is the **unit** of electrical **resistance.**

That these three factors of the circuit—the volt, the ampere, and the ohm—were the key factors to the study of electrical circuits and their actions, was the conclusion of George Simon Ohm, a German scientist, as he pondered over the question in 1827, and from these conclusions he formulated the all-important **Ohm's Law** which stands today as the basic formula underlying all electrical theory and measurement. The unit of resistance was given his name. This famous Ohm's Law is the simple statement that:

The current in an electric circuit is equal to the pressure divided by the resistance.

This law can also be written in formula form:

$$\text{Current} = \frac{\text{Pressure}}{\text{Resistance}}$$

NOTE: The above formula is read **current** equals **pressure** divided by **resistance.** In a formula when a word, letter, or number is placed above a line and over another word, letter, or number, the line has the same meaning as the sign ÷, which is read *divided by.*

This is far too unwieldy a form for quick use, and so abbreviations, symbols, or letters are used to represent these words:

Pressure = Volt = E
Current = Ampere = I
Resistance = Ohm = R

In explanation: the **E** is the first letter of the term **electromotive force,** which is used in the study of pressure when the units are unknown; the **I** is the first letter of the term **intensity of current** rather than make use of the letter **C,** as the latter is a symbol which has other uses; and the **R** is the first letter of the word **resistance.** Thus, the formula

$$\text{Current} = \frac{\text{Pressure}}{\text{Resistance}} \text{ can now be written } I = \frac{E}{R}$$

This formula, of course, is of use only to find the current when you know the pressure and resistance. The formula can be rearranged so that the letter which stands for what you want to find is on the left side of the equality sign. As there are only three members of this formula, there are just three possible forms of arrangement. They are:

$$I = \frac{E}{R} \quad E = IR \quad R = \frac{E}{I}$$

LEARNING OHM'S LAW. As there are just these three forms of this formula, it is best to learn them as written above. Do not read them hurriedly and pass them by, but learn them thoroughly, for they are absolutely necessary to your understanding of the subject. Perhaps a study of them will help fix their relations in your mind.

Since Ohm's law is one of the most commonly used fundamentals of electricity, it is essential that it should be memorized. A very ingenious way of representing and of memorizing Ohm's law is embodied in Figs. 1 to 4. If any one part be removed or covered, the relative position of the other two gives the value of the one covered in terms of the other two.

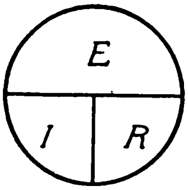

Fig. 1

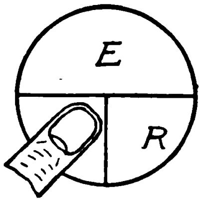

Fig. 2

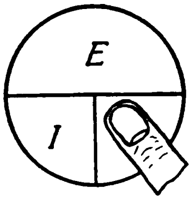

Fig. 3

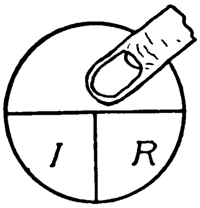

Fig. 4

Thus if we cover I, Fig. 1, $E \div R$ is left, Fig. 2. Therefore the value of I in terms of E and R is E divided by R. If R is covered, $E \div I$ remains, Fig. 3, giving the value of R in terms of E and I, which is E divided by I. In the same way, if we cover E, we have its value remaining in terms of I and R, namely, I times R, Fig. 4.

Example 1

A voltage of 6 volts is used to force a current through a resistance of 3 ohms. What is the current?

Solution

The voltage (E) is 6 volts and the resistance (R) is 3 ohms, we wish to find the current (I). Using the first statement of Ohm's law we find that

$$I = \frac{E}{R} = \frac{6}{3} = 2 \text{ amperes}$$

Example 2

What voltage is required to force a current of 2 amperes through a resistance of 10 ohms?

Solution

The current (I) is 2 amperes and the resistance (R) is 10 ohms. We want to find the voltage (E).

$$E = I \times R = 2 \text{ amperes} \times 10 \text{ ohms} = 20 \text{ volts}$$

Example 3

A voltage of 20 volts is required to force a current of 5 amperes through a coil. What is the resistance of the coil?

Solution

Voltage (E) = 20 volts. Current (I) = 5 amperes

$$R = \frac{E}{I} = \frac{20 \text{ volts}}{5 \text{ amperes}} = 4 \text{ ohms}$$

Example 4

The voltage between the ends of a piece of wire is 15 volts and its resistance is 3 ohms. What current will flow through it?

Solution

Covering the symbol I in the diagram, Fig. 1, there remains $E \div R$. Substituting the values of voltage and resistance given, we have $15 \div 3 = 5$ amperes.

Example 5

A current of 10 amperes is forced through a conductor by a pressure or voltage of 30 volts. What is the resistance of the conductor?

Solution

Covering R in the diagram, Fig. 3, we have left $E \div I$. Substituting for E and I their values from the conditions as stated, we have $30 \div 10 = 3$ ohms.

Example 6

A current of 10 amperes flows through a resistance of 2 ohms. What is the voltage that is forcing the current through the resistance?

Solution

Covering E, Fig. 4, we have left I times R. Substituting their values as before, we have $10 \times 2 = 20$ volts.

APPLICATIONS OF OHM'S LAW. Ohm's law may be applied to a circuit as a whole or it may be applied to any part of the circuit—a circuit being the path through which a current flows from its source through a conductor back to its source. A great amount of caution and practice is required to apply this law correctly in all cases. Accordingly, there is no part of electrical work where so many mistakes are made as in the application of this simple law. Once the principle is firmly grasped, the student is prepared to handle correctly a wide range of electrical problems.

Many of the difficulties will be cleared up if the student will keep in mind the following two statements and will use them intelligently.

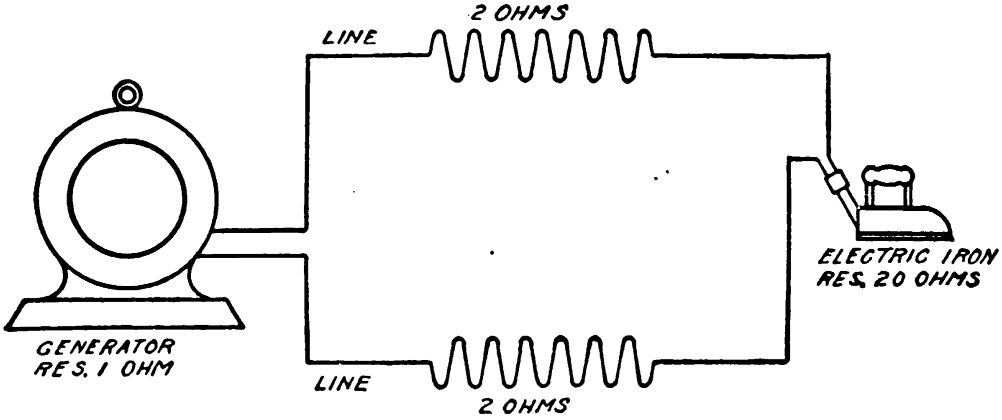

Fig. 5

When applying the law to the *entire* circuit, state the law as follows:

(1) The current in the entire circuit equals the voltage across the entire circuit divided by the resistance of the entire circuit.

Notice that the term "*entire*" applies to current, voltage, and resistance. Not to one of them, but to *all* the factors of the equation.

When applying the law to a part of the circuit, state the law as follows:

(2) The current in a certain part of a circuit equals the voltage across that same part divided by the resistance of that same part.

Notice here again that the values for current, voltage, and resistance are taken from the "*same part*" of the circuit. By far the greatest number of mistakes in applying Ohm's law come from dividing the voltage across one part of the circuit by the resistance of some other part of the circuit and expecting to get the current in some part of the circuit.

Example 7

Fig. 5 is a diagram of a typical direct-current circuit. The generator has a resistance of 1 ohm and generates 150 volts at no load. Each line wire has a resistance of 2 ohms. The iron which represents the load has a resistance of 20 ohms. What is the current in the circuit?

Solution

The resistance of the entire circuit is the resistance of the generator plus the resistance of the lines plus the resistance of the load, or

$$R = 1 + 2 + 2 + 20 = 25 \text{ ohms}$$

The total voltage produced is 150 volts, therefore the current is

$$I = \frac{E}{R} = \frac{150}{25} = 6 \text{ amperes}$$

IR Drop

The electromotive force of a generator, such as a dynamo or a battery, is the potential difference maintained between its terminals when no current is being taken from it. When current is taken from the generator, the terminal voltage—that is, the voltage applied to the line—is less than the open circuit voltage by an amount equal to the resistance drop or *IR* drop in the generator. The potential difference existing between two points in a circuit is called drop in potential, potential drop, fall of potential, voltage, and the like.

By Ohm's law the voltage drop in any *part* of a circuit is equal to the current in that part multiplied by the resistance of that part of the circuit.

$$E = I \times R \text{ volts}$$

in which *E* is the voltage, *I* the current, and *R* the resistance of *that part* of the circuit.

Thus the fall of potential in that portion of a circuit whose resistance is *R* is often called the "*IR drop*," as the *IR* drop applies to any *part* of the circuit it will also by proper use apply to the entire circuit.

Example 8

What is the IR drop across the electric iron shown in Fig. 5, when 6 amperes are flowing through it?

Solution IR drop $= 6 \times 20 = 120$ volts

Example 9

In Fig. 5 what is the voltage drop in the line when a current of 6 amperes flows through the circuit?

Solution

The total IR drop in the line will be twice that in one of the wires. The total line drop is

$$IR \text{ drop} = (6 \times 2) \times 2 = 24 \text{ volts}$$

Example 10

What is the IR drop in the generator when it is delivering a current of 6 amperes?

Solution IR drop $= 6 \times 1 = 6$ volts

Example 11

What must be the open circuit voltage of the generator in order that it deliver a current of 6 amperes to this circuit?

Solution

Electromotive force $= 120 + 24 + 6 = 150$ volts

Or, total resistance $= 1 + 2 + 2 + 20 = 25$ ohms

Total IR drop in circuit $= 6 \times 25 = 150$ volts

Suppose that the circuit to the electric iron is opened by removing one of the wires fastened to the electric iron. Then when a voltmeter is connected to the two wires coming from the generator shown in Fig. 5, it will read 150 volts. The voltmeter will also read 150 volts when it is connected to the wire removed from the iron and the wire fastened to the iron. The reason for this is because there is not any current flowing through the circuit, and the voltage between the two wires of the circuit is the same at all points.

Now reconnect the wire back to the electric iron, and the voltmeter will read 120 volts between the two wires connected to the electric iron. (See example 8.) It will read 144 volts (150 less 6 volts drop in generator) at the terminals of the generator. The difference between the voltage at the electric iron and that at the generator is 24 volts (see example 9) which are used up in forcing the current through the line which has a resistance of 4 ohms. Thus the **I R** drop is the voltage used in forcing a current through the circuit to the point where it is made to do useful work.

EMPHASIZING THE IMPORTANCE OF PRESSURE. You have seen how the statement in the formula $\mathbf{E} = \mathbf{IR}$ shows the volts to be the largest and perhaps the most important member of the formula. You will also remember that the scientist, Ohm, devised this formula to represent the actual relations of the circuit over a long period of tests; and he was so accurate in his assumptions that today, after more than one hundred years, the formula is in universal use without a thought as to its change. As this formula represents the actual relations of the circuit, then it is true that the pressure is the essential factor of the circuit. This is as certainly true in the water or hydraulic systems, to which for the sake of study, the electrical circuits are continually being compared.

In the water system the pipes may be full of water, but none will flow at the faucet unless there is pressure in the water mains. Just so in the electric circuit, there is no current flowing in the circuit unless there is electrical pressure in that circuit.

An electrical generator is simply a device for keeping up pressure in an electrical system. When the generator stops, the pressure is cut off and the current ceases to flow.

From these statements we can see the direct effect upon the current of a circuit is caused by the changing of the circuit's resistance. Any change in the resistance will increase or decrease the total resistance of the circuit which holds back the pressure, and a corresponding change results in the current flowing through the circuit. From this is also gained an idea of the interrelation between pressure and current, and how the volume of the current is directly dependent upon the pressure of the circuit.

Pressure is a factor supplied from an outside source, such as a storage battery; the amount of current is a result of a balance between pressure and resistance; while resistance is a physical part of the circuit and its change is only effected by a physical change in the apparatus.

It is true that no current is lost as it passes through the circuit. If any current flows at all, it flows from the source of power through the entire circuit and back again to the power source. Pressure is the only one of these three factors which suffers a loss, and its value is reduced to zero as the point in its travels through the circuit is reached where it again enters the source of power.

Current can be controlled through a voltage change and this is usually done through the adjusting of a resistance.

POWER EQUATION

The Power Equation is—"The power, in watts, equals the amperes of a circuit × volts of the circuit," and is written

$$P = IE$$

P standing for watts, I for current, and E for volts.

The equation can be arranged as shown in Fig. 6. Applying the method learned in Ohm's Law by covering up the quantity we want, it becomes evident how to find it. Cover P, Fig. 7, and you have $P = I \times E$. Cover I, Fig. 8, and you have $I = P \div E$. Cover E, Fig. 9, and you have $E = P \div I$.

A study of this will show you that if the voltage of the circuit be doubled, the circuit must be adjusted to halve the current if the power to be transmitted is to remain the same. This is probably better explained with the use of a small and simple equation. In this way the limitation of voltage values for transmission is clearly shown.

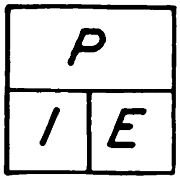

Fig. 6. Power Formula

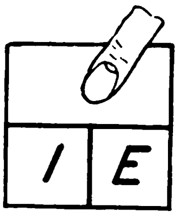

Fig. 7. To Find Power

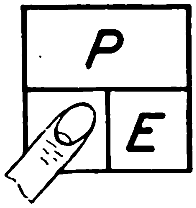

Fig. 8. To Find Current

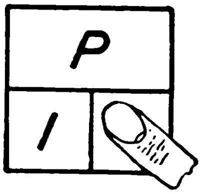

Fig. 9. To Find Voltage

You do not have to stop and think when told that

$$16 = 8 \times 2$$

You also know that the value of 16 is not increased nor decreased but remains the same, when it is written

$$16 = 2 \times 8 \text{ or } 16 = 4 \times 4$$

Now if we have 2 amperes flowing through a circuit with the pressure of 8 volts, we have 16 watts of power in the circuit. We would still have 16 watts if we had 8 amperes at a pressure of 2 volts or 4 amperes at a pressure of 4 volts.

If you were attempting to light four 4-watt lamps, you would know that the wattage of the circuit would necessarily have to be constant. You could not keep this constant if you attempted to raise the line voltage without some different arrangements being made in the circuit to hold back the current or else the wattage would also rise. So the voltage of the lamps is not chosen until after the circuit voltage is determined, this choice will supply the current-limitation features of the circuit. We are primarily concerned here with the reduction of the line loss or "voltage drop" in the length of the supply lines required to reach the lamps of the circuit, so we will follow this study through in this direction.

Line loss is a loss in pressure, and since this loss in pressure is governed by the amount of current sent through a line, it is to our interest to keep this current down to as small a value as practicable. This can be worked out by a voltage adjustment as you will readily see if you follow carefully the working out of this Power Equation.

We would like to transmit 16 watts to supply our four 4-watt lamps. Since there are no known conductors lacking resistance, it stands to reason that these supply mains must possess some resistance. For the purpose of keeping away from the mathematics of fractions, let us say that this supply line has a resistance (R) of 2 ohms—a value much too high for the successful operation of so small a circuit, as you will soon see. The equation for power lost in supply lines is

$P = I^2R$ or $P = (I \times I) \times R$ or

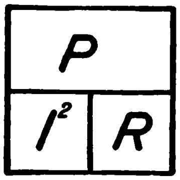

Fig. 10. Power Loss Formula

meaning that the power in watts lost in this line is equal to the amperes of the line *squared* (the quantity multiplied by itself) then multiplied by the resistance of the line in ohms. We would like to transmit 16 watts over this line which has 2 ohms resistance ($2\ R$). Now if we have a line pressure of 8 volts, the current will be 2 amperes, and fitting this to our equation—you see we use the amperes only, not the volts—we have a power loss in the line equal to 2 amperes squared (2×2) which equals 4, and this is multiplied by the 2 ohms line resistance.

$$P = (2 \times 2) \times 2$$
$$P = 4 \times 2 = 8$$

We have then 8 watts lost in line transmission; and since it is lost, it has to be deducted from the 16 watts which we had to transmit. This will leave us only 8 watts to supply our 16-watt load. Clearly we will have to either increase our voltage at the generator or decrease the resistance of our transmission line. We have taken in this example the highest voltage we could use unless we took a voltage of 16 and a current of 1 ampere. Let us continue with this equation $P = I^2 R$ and follow it through with 16 volts and 1 ampere. The 1 ampere squared (1×1) would give us a figure of 1 and this multiplied by the 2 ohm resistance of the line would give us a power loss of 2 watts.

$$P = (1 \times 1) \times 2$$
$$P = 1 \times 2$$
$$P = 2 \text{ watts}$$

This would leave us $16 - 2$ or 14 watts to power our lights. We clearly would have to reduce our line resistance to get a smaller loss or else still further increase our voltage. We could do both of these, but even then we could not expect to deliver all the generated wattage to the lamps for some line losses will always exist.

Chapter 4

Electrical Power Measurements

WORK AND POWER. The words **work** and **power** are often confused or interchanged in common use. The proper use of the term **work** means the overcoming of resistance. **Power** means the speed or rate of doing work.

Work = Force × Distance

When a force acts upon a body, the product of the force multiplied by the distance through which it acts in the direction of the force is called the work performed by the force. Thus, when a force applied to a heavy body raises it a vertical distance, work is performed by the force. The amount of work is the product of the force and the distance of ascent. In other words, **work** is the result obtained by multiplying the force it takes to pull a bucket of water upward by the distance the bucket was raised.

Force is generally measured in pounds and distance is in feet, so when the two are multiplied together, as explained above, the result is foot pounds. Therefore, the term **foot pound** is the measure of work.

Fig. 1 shows a man carrying a bucket of water weighing 20 pounds up a flight of stairs to a platform 10 feet high. The force required to lift the bucket of water is 20 pounds, and the vertical distance it has been raised is 10 feet. The force required to lift a load or weight of any kind is always equal to the load. If an object weighs 20 pounds, then 20 pounds of force is required to lift it. The quantity of **work** the man has done is the product of the force and the distance upward, or 20 pounds multiplied by 10 feet, which equals 200 foot pounds. In formula form this is written as follows:

Work = 20 × 10 = 200 foot pounds

Fig. 2 represents a man raising a bucket of water weighing 20 pounds, to a platform 10 feet above the level upon which he is standing, by means of a rope and pulley. Here again the force is 20 pounds and the vertical distance is 10 feet. The **work** performed is still force times distance, or 20 × 10 = 200 foot pounds. The 20 represents the force and the 10 the distance, as in above.

Suppose, instead of lifting the water by manual effort, it is forced up to the bucket by a pump driven by a motor, as shown in Fig. 3. In order to fill the bucket, which is placed upon the platform 10 feet above the level of the water tank, 20 pounds of water are required. Therefore, the motor must do 200 foot pounds of **work.** Here the motor does the work done by the man in Figs. 1 and 2. When a horizontal force moves a body horizontally, the **work** is the product of the force and the horizontal distance. As an example of this, take the ordinary street car in which motors are used to push the car along the street.

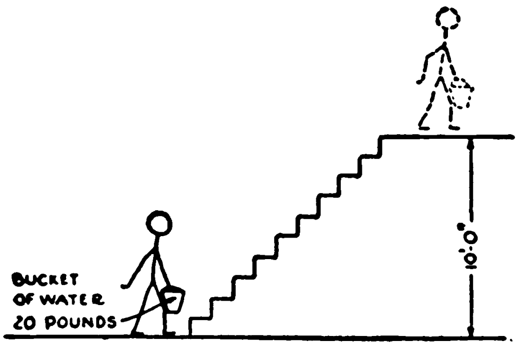

Fig. 1. Man Carrying a Bucket of Water Up a Vertical Distance

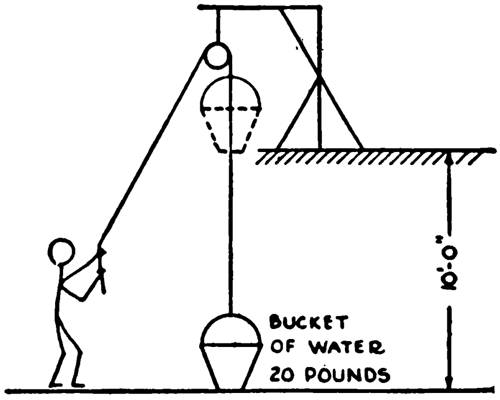

Fig. 2. Raising a Bucket of Water by Means of a Rope and Pulley

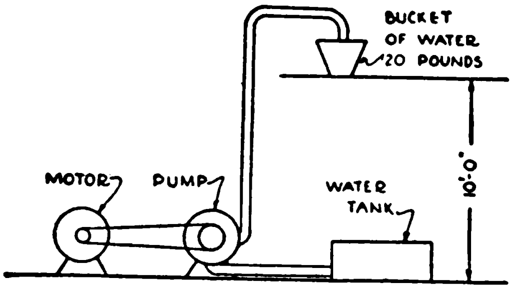

Fig. 3. Pumping Water by Means of a Motor Driven Pump

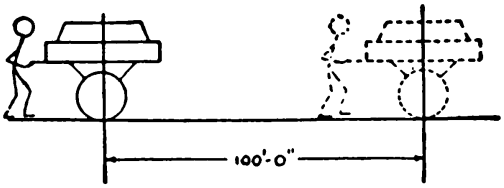

Fig. 4. Man Pushing a Cart in Which Resistance to Motion Is Twenty Pounds

Fig. 4 shows a man pushing a cart. To keep the cart moving at a constant speed, it is necessary that the man apply a force of 20 pounds to overcome the friction or resistance to motion. Therefore, when he has pushed the cart 100 feet, he has performed an amount of work equal to force times distance, or

$$20 \times 100 = 2000 \text{ foot pounds}$$

In any of the above cases no mention of time has been made. The amount of **work** done is the same whether the task has been performed in one minute or one hour.

POWER. In the formula for calculating **power,** it is necessary to divide the force times the distance (in other words, the **work**) by the time taken to do the work.

$$\text{Power} = \frac{\text{Force} \times \text{Distance}}{\text{Time}} = \frac{\text{Work}}{\text{Time}}$$

Power means the speed or rate of doing work. The faster **work** is done, the greater the **power** required to do it. Fig. 3 shows a motor-driven pump raising water from a tank to a platform 10 feet above it. To deliver 20 pounds of water, it will take 200 foot pounds of work. In order to deliver this water at the rate of 20 pounds per second to a height of 10 feet, the power required is $\frac{20 \times 10}{1} = 200$ foot pounds per second, or $200 \times 60 = 12{,}000$ foot pounds per minute. First, we found the **power** required per second to lift 20 pounds of water in a second by dividing the **work** by **one second.** Then we found the foot pounds per minute by multiplying 200 by the number of seconds in a minute. Suppose the man shown in Fig. 4 pushes the cart 100 feet in six seconds. The power required is **work** done divided by the time, or $\frac{20 \times 100}{6} = 333\frac{1}{3}$ foot pounds per second.

Study the above explanations very carefully until you are sure you understand them and will remember them.

HORSEPOWER. The earliest use of steam engines was to pump water from mines. This work had previously been done by horses, consequently, the power of the various engines was estimated as equal to that of so many horses. Finally, James Watt carried out some experiments to determine how many foot pounds of work a horse could do in one minute. He found that a strong dray horse working for a short time could do work at the rate of 33,000 foot pounds per minute. This rate is therefore called horsepower. To determine the horsepower of a machine, compute the number of foot pounds of work per minute and then divide by 33,000.

$$\text{Horsepower} = \frac{\text{foot pounds per minute}}{33{,}000}$$

Referring to Fig. 3, the horsepower required to raise 20 pounds of water 10 feet in one second is

Horsepower =

$$\overset{(A)}{\frac{\text{pounds per minute} \times \text{height}}{33{,}000}} = \overset{(B)}{\frac{\text{foot pounds per minute}}{33{,}000}} = \overset{(C)}{\frac{12{,}000}{33{,}000}} = 0.36$$

The first part (A) of this horsepower formula refers to the explanation for finding **power.** If 20 pounds of water must be lifted per second, then in 60 seconds (one minute) 20 × 60 = 1200 pounds of water would be lifted. We must always base our calculations on minutes, because the horsepower formula is based on minutes. Now if we multiply 1200 by 10 (the distance), we get 12,000 foot pounds, which is the power. Thus the formula at (A) could be written

$$\text{Horsepower} = \frac{12{,}000}{33{,}000}$$

The second part (B) of the horsepower formula means the same as the part at (A). The only difference is in the wording, because pounds per minute times height gives foot pounds per minute. So (B) could be written.

$$\text{Horsepower} = \frac{12{,}000}{33{,}000}$$

In the third part (C) of the horsepower formula, we have used the numerical value of pounds per minute times height and foot pounds per minute. Then 12,000 is divided by 33,000 and the answer is as shown. These three steps show how the horsepower formula is developed and should be very carefully studied.

The horsepower required to push the cart, Fig. 4, a distance of 100 feet in 6 seconds, that is, to do 20,000 (see explanation on page 49) foot pounds work per minute, is

$$\text{Horsepower} = \frac{\text{foot pounds per minute}}{33{,}000} = \frac{20{,}000}{33{,}000} = 0.6$$

ELECTRIC POWER. To measure waterpower, we must know the quantity of water flowing by a given point per minute and the head (which means height) to which it is raised.

$$\text{Waterpower} = \text{quantity of water per minute} \times \text{head}$$

$$\text{Horsepower} = \frac{\text{pounds per minute} \times \text{head}}{33{,}000}$$

To measure electric power, we must multiply the quantity of electricity flowing per second, that is, the current in amperes, by the voltage.

$$\text{Electric power} = \text{Amperes} \times \text{Volts}$$

In the problem illustrated by Fig. 3, it was stated that 20 pounds of water was being delivered to the platform in one second. Thus we speak of the water as flowing at the rate of 20 pounds per second. In much the same way we speak of electricity as flowing along a wire at the rate of so many **coulombs** per second. The coulomb is the unit of quantity of electricity, just as the gallon is the unit of quantity of water. We have to consider the rate of flow of electricity so often that we have a special name for the unit of rate of flow (one coulomb per second). We call it an **ampere.** Thus 5 amperes means 5 coulombs per second.

The **watt** is the unit of electric power and may be defined as the power required to keep a current of one ampere flowing under a drop or head of one volt. For example, if a lamp draws 0.5 amperes from a 110-volt circuit, it is using power at the rate of $0.5 \times 110 = 55$ watts. Since the watt is a very small unit of power, we commonly use the kilowatt (Kw.), which is 1000 watts.

$$\text{Kilowatt} = \frac{\text{Amperes} \times \text{Volts}}{1000}$$

Inasmuch as mechanical power is reckoned in horsepower, it will be convenient to know the relation of the unit of mechanical power to the unit of electrical power. Experiment shows that

1 horsepower = 746 watts
1 kilowatt = 1.34 horsepower

DIRECT-CURRENT POWER MEASUREMENTS

VOLT-AMMETER METHOD. In direct-current circuits, power is equal to the product of the volts applied to the load times the current in amperes passing through the load.

$$\text{Power} = \text{Volts} \times \text{Amperes}$$

It is therefore the usual practice to measure direct-current power by means of a voltmeter and an ammeter, it only being necessary to multiply the volts by the amperes to obtain the power in watts. Particular care must be taken that they are the true values as stated above, namely, the volts applied to the load and the current in amperes passing through the load. To obtain these values certain precautions are necessary. Should the meters be connected as shown in Fig. 5 or in Fig. 6? The voltmeter, connected as shown in Fig. 5, measures the true volts applied to the load but the ammeter reads the sum of the current taken by the load and that passing through the voltmeter. When connections are made, as shown in Fig. 6, the ammeter indicates the exact amount of current passing through the load but the voltmeter indicates the sum of the voltage drop across the lamp and the voltage drop across the ammeter.

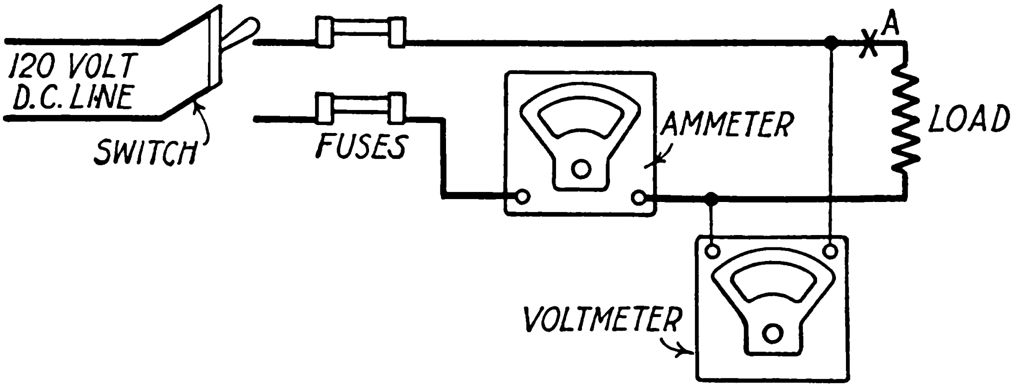

Fig. 5. The Best Method of Connecting Meters When Current Is Large

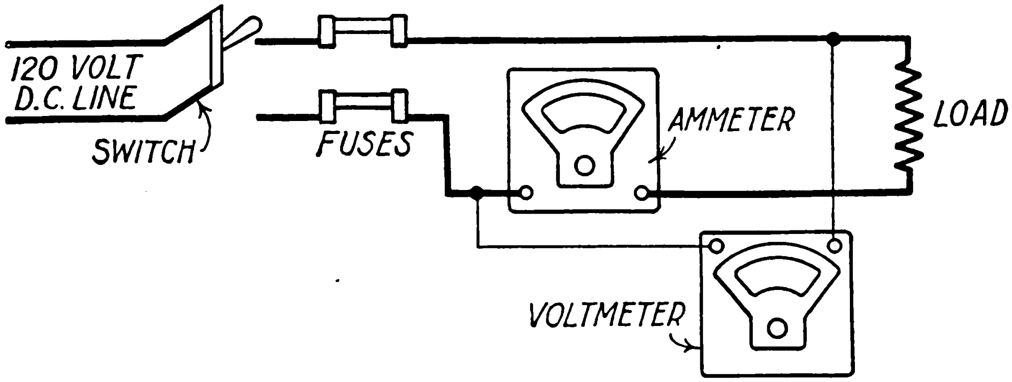

Fig. 6. The Best Method of Connecting Meters When Current Is Very Small

Power calculated from the indications obtained with connections as in Fig. 5 would indicate the watts delivered to the load plus the watts dissipated in the voltmeter. If the voltmeter resistance is known, its wattage may be calculated by dividing the voltage squared (multiplied by itself) by the resistance.

$$\text{Voltmeter Watts} = \frac{\text{Volts} \times \text{Volts}}{\text{Ohms}}$$

If the voltmeter resistance is not known, it may be measured by connecting the voltmeter in series with a low range ammeter and applying the line voltage. The resistance is then calculated by Ohm's Law, from the current indicated by the low range ammeter and the voltage indicated by the voltmeter. A quick check to determine whether or not it is necessary to deduct the watt loss in the voltmeter is to open the load circuit at point *A*, Fig. 5, and note the ammeter reading. If the deflection is too small to be read, then the watts loss in the voltmeter is small compared to the watts taken by the load and may be neglected. This is the most accurate method of measuring direct-current power when corrections are to be made for power lost in the instruments.

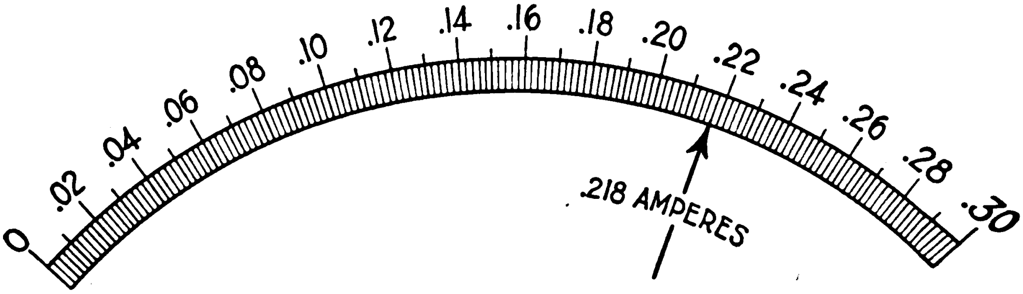

Fig. 7. Ammeter Scale

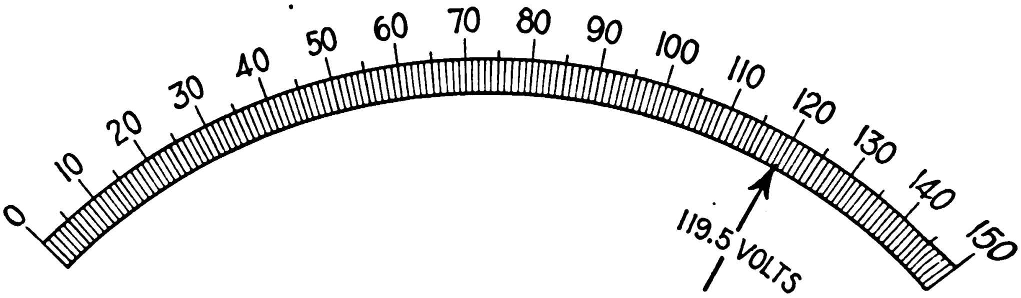

Fig. 8. Voltmeter Scale

When approximate measurements are desired of low voltage loads (100 watts or under), the connections as shown in Fig. 6 are convenient. In this case the watt loss in the ammeter is so small it is usually neglected. However, when measurements are taken for loads carrying larger currents, the losses in the ammeter shunt and connections may become great enough to introduce an appreciable error in the results.

Let us assume that we desire to measure the wattage of a 25-watt incandescent lamp and that the instruments are connected as shown in Fig. 5. The instruments used are 0.300-ampere ammeter having a resistance of 0.17 ohms and a 150-volt voltmeter having a resistance of 15,000 ohms. The ammeter scale shown in Fig. 7 indicates 0.218 ampere. The voltmeter scale shown in Fig. 8 indicates 119.5 volts.

$$\text{Apparent Power} = \text{Volts} \times \text{Amperes}$$
$$= 119.5 \times 0.218 = 26.05 \text{ Watts}$$
$$\text{Voltmeter Watts} = \frac{\text{Volts} \times \text{Volts}}{\text{Ohms}}$$
$$= \frac{119.5 \times 119.5}{15{,}000} = 0.95 \text{ Watts}$$
$$\text{True Watts} = 26.05 - 0.95 = 25.10 \text{ Watts}$$
$$\text{Per cent error} = \frac{0.95}{25.10} \times 100 = 3.78\%$$

Since the ammeter has a resistance of 0.17 ohm and is carrying 0.218 amperes, the voltage drop across it is, by Ohm's Law,

$$\text{Volts} = \text{Amperes} \times \text{Ohms}$$
$$= 0.218 \times 0.17 = .037 \text{ volt}$$

The true line voltage is then the sum of the voltage across the load plus the drop across the ammeter.

$$\text{Line Volts} = \text{Load Volts} + \text{Drop across Ammeter}$$
$$= 119.5 + .037 = 119.537 \text{ volts}$$

On the scale illustrated in Fig. 8, it is practical to read only to the nearest half of a scale division which is 0.5 volt. Therefore, with the instruments connected as shown in Fig. 6 and the same line voltage as in Fig. 5, the voltmeter would still indicate a reading of 119.5 volts. However, we will use the calculated figure given above in order to work out the error in this method of measurement.

If the voltmeter be connected outside the ammeter, as shown in Fig. 6, the ammeter will read the true current passing through the lamp. This current will be equal to the ammeter reading for Fig. 5 less the current passing through the voltmeter.

$$\text{Voltmeter Current} = \frac{\text{Volts}}{\text{Ohms}}$$
$$= \frac{119.5}{15{,}000} = .008 \text{ ampere almost}$$

Current passing through the lamp is then

$$0.218 - 0.008 = 0.210 \text{ ampere}$$

$$\text{Apparent Power} = \text{Volts} \times \text{Amperes}$$

$$= 119.537 \times .210 = 25.102$$

Since the true wattage is 25.10 watts

$$\text{Error} = 25.102 - 25.10 = .002 \text{ watts}$$

$$\text{Per cent error} = \frac{.002}{25.10} \times 100 = .008\%$$

The error is so small as to be negligible.

When tests are made on larger loads requiring several thousand watts, the loss in the voltmeter becomes so small in comparison to the amount of power measured that it is negligible. However, the losses in the leads and connections between the point where it is convenient to connect the ammeter and the load to be measured become an important factor which must either be accounted for or eliminated from the calculations altogether.

The exact amount of losses in the leads and connections is difficult to determine, since they consist of not only the ohmic resistance of the conductors and shunt but also include the losses due to contact resistance whenever there are joints. Because contact resistance is a variable and not easily measured quantity, precautions should be taken in testing to eliminate its effect as much as possible.

When small currents are to be measured, the error due to contact resistance is small and, when care is taken in making connections, will have very little effect on the meter indications. But when the currents are large, the contact losses become an appreciable amount of the power to be measured and, for accurate work, measurements must be so taken as to eliminate this error.

Fig. 9 shows the necessary connections for measuring the power delivered to a 20-horsepower 230-volt direct-current motor operating at almost full load. The purpose of this test is to determine whether or not the motor is overloaded. In order to demonstrate the error due to the two methods of connecting in the voltmeter, both connections are shown and values of resistance have been assumed for the resistance due to the leads and contacts.

In the plus lead, the resistance of connections from the motor to the point *A* at which the voltmeter is connected we will assume is 0.02 ohm, and the resistance of the negative lead including the shunt and connections is 0.025 ohms from the motor to the point *B*. The ammeter indicates 62.5 amperes and voltmeter No. 1 indicates 225 volts. Voltmeter No. 1 is connected directly to the motor terminals and therefore indicates the true voltage applied to the motor. The ammeter indicates the sum of the current taken by the motor plus that taken by the voltmeter.

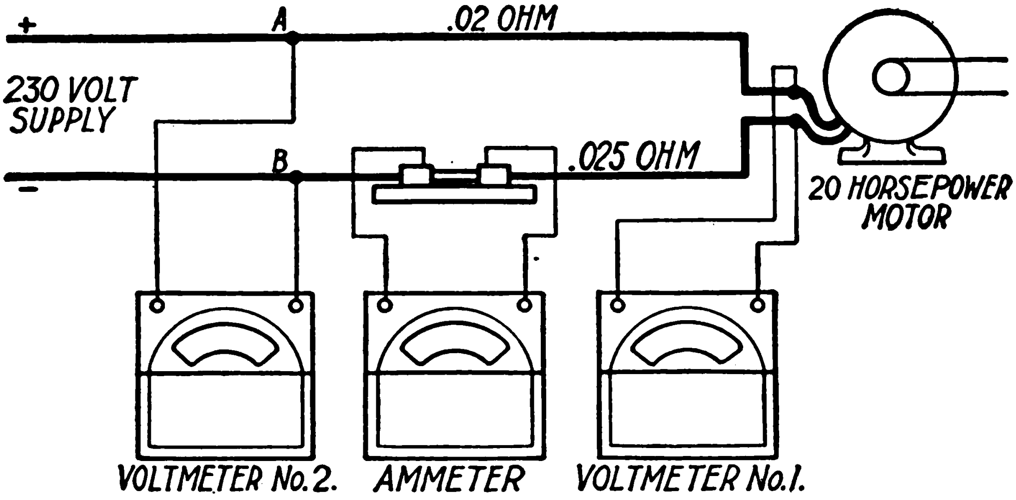

Fig. 9. Necessary Connections for Measuring Power Delivered to a 20-Horsepower D.C. Motor

$$\text{Apparent Power} = \text{Volts} \times \text{Amperes}$$
$$= 225 \times 62.5 = 14{,}062.5 \text{ watts.}$$

The resistance of the voltmeter is 30,000 ohms

$$\text{Voltmeter No. 1 Loss} = \frac{\text{Volts} \times \text{Volts}}{\text{Ohms}}$$
$$= \frac{225 \times 225}{30{,}000} = 1.69 \text{ watts}$$
$$\text{True Watts} = \text{Apparent Watts} - \text{Losses}$$
$$= 14{,}062.5 - 1.69 = 14{,}060.8 \text{ watts}$$
$$\text{Per cent error} = \frac{\text{Losses}}{\text{True Watts}}$$
$$= \frac{1.69}{14{,}060.8} \times 100 = 0.012\%$$

The error is so small that it is negligible.

Now let us consider the indications resulting if the readings are taken with the voltmeter connected on the line side of the ammeter as represented by voltmeter No. 2.

The total line resistance between the points *A* and *B* and the motor is

$$0.025 + 0.02 = 0.045 \text{ ohm}$$

$$\begin{aligned}\text{Voltage Drop in Line} &= \text{Amperes} \times \text{Ohms}\\ &= 62.5 \times 0.045 = 2.81 \text{ volts}\end{aligned}$$

Therefore the line voltage indicated by voltmeter No. 2 is

$$\text{Line Voltage} = 225 + 2.81 = 227.81 \text{ volts}$$

The current taken by voltmeter No. 1 is

$$\begin{aligned}\text{Current} &= \frac{\text{Volts}}{\text{Ohms}}\\ &= \frac{225}{30{,}000} = 0.0075 \text{ amperes}\end{aligned}$$

As this is much too small an amount to be read on the scale of the ammeter, the indication will still be 62.5 amperes.

$$\begin{aligned}\text{Apparent Wattage} &= \text{Volts} \times \text{Amperes}\\ &= 227.81 \times 62.5 = 14{,}238.1 \text{ watts}\\ \text{Error} &= \text{Apparent Wattage} - \text{True Wattage}\\ &= 14{,}238.1 - 14{,}062.5 = 175.6 \text{ watts}\\ \text{Per cent error} &= \frac{\text{Losses}}{\text{True Watts}} \times 100\\ &= \frac{175.6}{14{,}062.5} \times 100 = 1.25\%\end{aligned}$$

While this error is small, it is uncertain and difficult to measure, therefore, the results obtained from the indications of the ammeter and voltmeter No. 1 are to be preferred.

The watts indicated may now be converted into horsepower by dividing by 746, since 746 watts is equal to one horsepower.

$$\begin{aligned}\text{Horsepower} &= \frac{\text{Watts}}{746}\\ &= \frac{14{,}062.5}{746} = 18.9\end{aligned}$$

The motor is therefore not overloaded, since it is rated at 20 horsepower.

Chapter 5

Principles of a Generator

ESSENTIAL PARTS OF A DYNAMO. The dynamo is a machine for converting mechanical energy into electrical energy or electrical energy into mechanical energy. When it is used in transforming mechanical into electrical energy, it is called a generator; and when it transforms electrical into mechanical energy, it is called a motor. The great majority of dynamos have the following essential parts: the magnetic field; the armature winding; the commutating and collecting devices (not required in all machines—the squirrel-cage induction motor, for example); and the necessary mechanical structure, such as bed plate, iron composing the magnetic circuit and its supporting structure, armature core, bearing supports, etc.

Magnetic Field. The function of the magnetic field is to provide a magnetic flux, which is cut by the inductors forming the armature winding.

Armature Winding. The armature winding is composed of a large number of wires, called inductors, in which an electromotive force (e.m.f.) or electrical pressure is induced when there is a relative movement of these inductors with reference to the magnetic field of the machine.

Commutator or Collecting Rings. The function of the commutating and collecting devices is to bring about the necessary reversal of connections between the various elements composing the armature winding and the external circuit, and at the same time to provide the necessary continuous electrical connection between the circuits on the moving part of the machine and the outside circuits.

Mechanical Parts. The function of the various mechanical parts is obvious, and the iron composing the magnetic circuit often performs a mechanical function in the construction of the machine, as, for example, the iron used in the construction of the armature core serves as a mechanical support for the armature windings.

In commercial continuous-current machines, the field magnet is nothing more than a simple electromagnet which remains stationary, but the armature is a great deal more complex and always rotates. In alternating-current machines either the armature or field may be stationary. Continuous-current machines always require a commutator, which is mounted on the same shaft as the armature, while the alternating-current machines are provided with slip rings when an electrical connection must be established between the rotating part of the machine and an outside circuit.

The development of the various forms of armature windings for both continuous- and alternating-current machines will be discussed in the following sections.

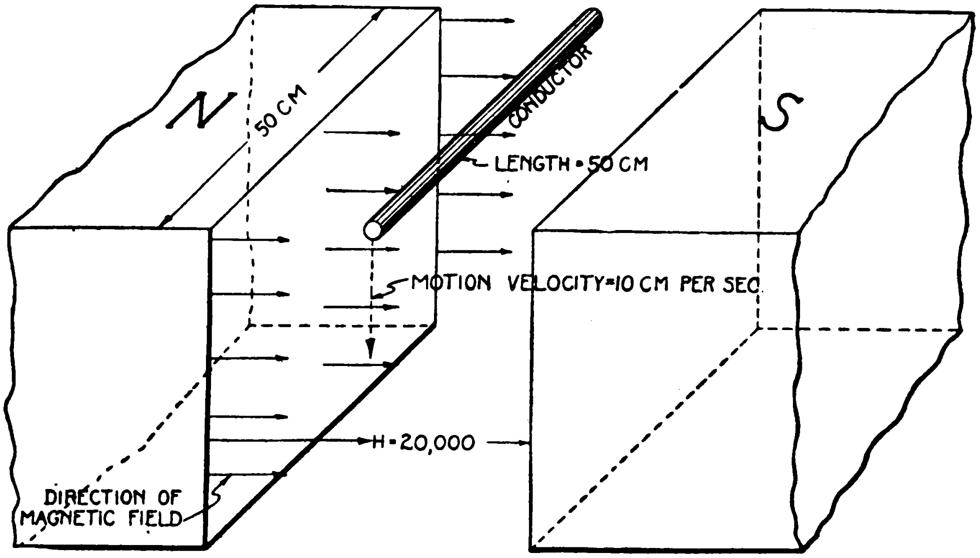

Fig. 1. Horizontal Conductor Moving Downward across a Uniform Magnetic Field—Motion Perpendicular to Field

PRODUCING AN E.M.F. BY CUTTING MAGNETIC LINES OF FORCE. When a conductor and a magnetic field are caused to move relative to each other, so that the imaginary lines of force that are supposed to compose the magnetic field are cut by the conductor, there will be an e.m.f. induced in the conductor.

E.M.F. Depends on Rate Lines Are Cut. The value of this induced e.m.f. at any instant will depend upon the rapidity with which the lines of force are being cut by the conductor at that particular instant. If the lines of force are being cut at a perfectly uniform rate, that is, if the same number are cut in each succeeding fractional part of a second, say one hundredth part of a second, and there is a total of 100,000,000 lines cut in one second, then there will be an e.m.f. of one volt induced in the conductor. Thus if a horizontal conductor 50 inches long were moved downward across a horizontal magnetic field whose intensity is 20,000 lines of force as indicated in Fig. 1, at a uniform velocity of 10 inches each second, all the magnetic lines in the area 10×50 inches would be cut in one second. Sizes there are 20,000 magnetic lines passing through each unit of area, then the total number of magnetic lines cut by the conductor in one second will be equal to $10 \times 50 \times 20000$, or 10,000,000. Dividing 10,000,000 by 100,000,000 gives 0.1 volt, the value of the e.m.f. induced in the conductor.

If the conductor be moved at a greater velocity, say twice as fast, then the e.m.f. induced will be equal to twice the stated value, and if its velocity be decreased there will be a corresponding decrease in the induced e.m.f. If the strength of the magnetic field be increased or decreased in value, there will be a corresponding increase or decrease in the value of the induced e.m.f. Likewise, if the length of the conductor in the magnetic field, or that part of the conductor which is actually cutting lines of force, be increased or decreased, there will be a corresponding increase or decrease in the value of the induced e.m.f.

If this conductor be made to form part of a closed electrical circuit, there will be a current of electricity produced in the circuit due to the e.m.f. induced in the conductor.

RIGHT-HAND RULE. There is a definite relation between the direction of the magnetic field, the direction of motion of the conductor, and the direction of the induced e.m.f., which is as follows: If the first and second fingers and the thumb of the right hand be placed at right angles to each other and in such a position that the first finger points in the direction of the magnetic field and the thumb points in the direction of motion, then the second finger will point along the conductor in the direction of the induced e.m.f. The direction of the induced e.m.f. will be reversed if the direction of the motion or the direction of the magnetic field be reversed. If the direction of the magnetic field and the motion both be reversed, then the direction of the induced e.m.f. will remain the same.

The motion of the conductor in Fig. 1 is perpendicular to the direction of the magnetic field, and, as a result, more magnetic lines are cut by the conductor when it moves a certain distance along its path than would be cut if the motion of the conductor were along a path making an angle of less than 90° with the direction of the magnetic field, Fig. 2.

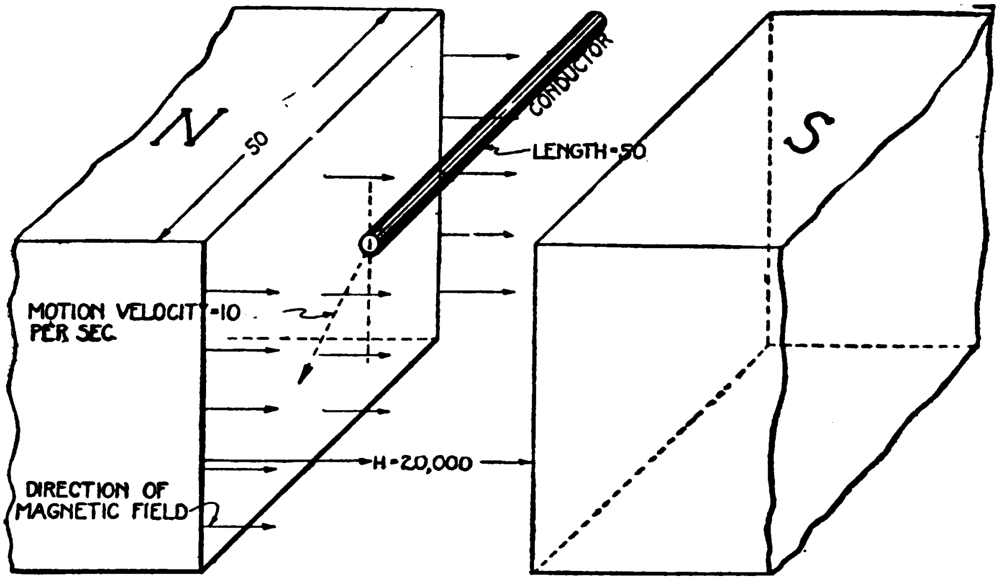

Fig. 2. Horizontal Conductor Moving Downward across Uniform Magnetic Field—Motion Not Perpendicular to Field

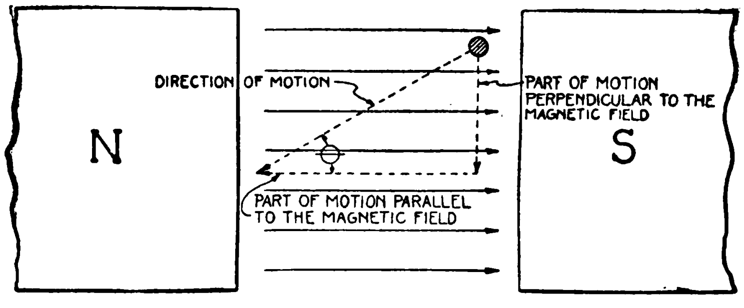

Fig. 3. Motion of Conductor Resolved into Two Components—One Perpendicular to Field and One Parallel to Field

In Fig. 2 it is that part of the velocity of the conductor perpendicular to the direction of the magnetic field that determines the rate of cutting of the magnetic lines. This part of the velocity of the conductor is indicated by a dotted vertical line downward from the conductor, Fig. 2. It is also illustrated in Fig. 3 where the diagonal line "direction of motion" is divided up into "part of motion perpendicular to the magnetic field" and "part of motion parallel to the magnetic field."

When the angle between the direction of motion of the conductor and the magnetic field is 30° as in Fig. 3, that "part of the motion perpendicular to the magnetic field" is only one-half of the "direction of motion." This can be verified by measuring the two dotted lines in Fig. 3. A change in the angle θ from 30° to 45° or 60° will cause a greater part of the "direction of motion" to be "perpendicular to the magnetic field." When this angle θ becomes 90°, all the "direction of motion" will be "perpendicular to the magnetic field." Thus that part of the motion that is perpendicular to the magnetic field has to be determined before the voltage can be determined.

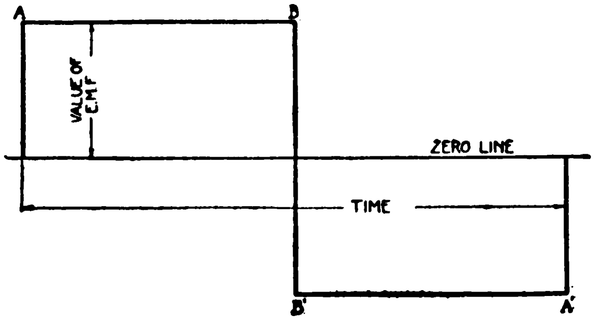

Fig. 4. Curve Representing Variation in Value of Electromotive Force Induced in a Conductor That Is Moved Back and Forth across a Uniform Magnetic Field at a Constant Velocity

SIMPLE GENERATOR

ANALYSIS OF OPERATION. Straight Conductor. When the conductor, Fig. 1, has moved downward a sufficient distance to be out of the magnetic field, there will be no e.m.f. induced in it, as it continues to move on down, for there will be no magnetic lines of force cut by the conductor. Now, in order that the conductor may continue cutting the magnetic lines of force, it will be necessary for the motion of the conductor to be reversed when it reaches the edge of the magnetic field in its downward travel; that is, the motion of the conductor must be alternately up and down across the magnetic field. If the strength of the magnetic field is uniform in the region in which the conductor moves and the velocity of the conductor is constant and the direction of its motion is reversed instantly, then the variation in the e.m.f. induced in the conductor may be represented graphically as shown in Fig. 4. Assume that

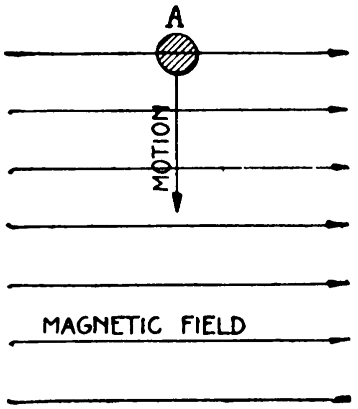

Fig. 5. Conductor Entering Magnetic Field and Moving Downward across Same

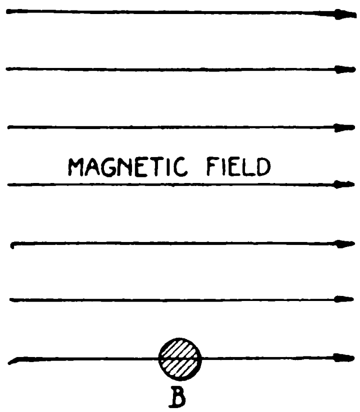

Fig. 6. Conductor at Lower Edge of Magnetic Field

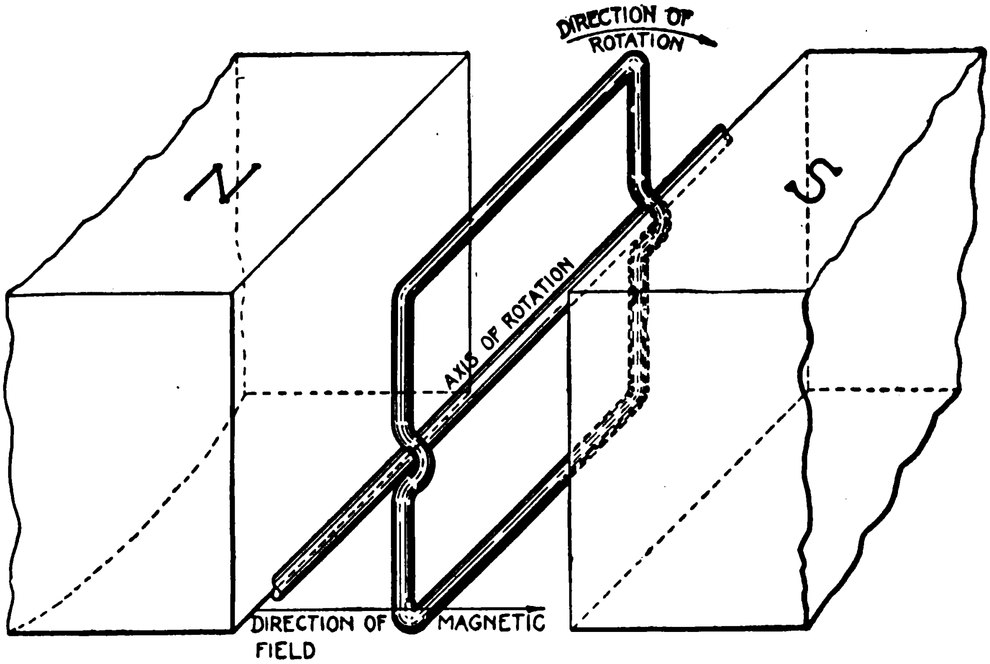

Fig. 7. Closed Loop of Wire Revolving in a Uniform Magnetic Field

the conductor starts from its uppermost position in the magnetic field, as shown at *A*, Fig. 5, and moves at a constant velocity downward across the magnetic field to its lowermost position, as shown at *B*, Fig. 6. During this time the conductor is cutting the magnetic lines at a constant rate for all positions and, as a result, the e.m.f.

induced in it is constant, as represented by the upper part of the line *AB*, Fig. 4. The height of the horizontal line *AB* above the zero line is a measure of the e.m.f. induced in the conductor. Now when the conductor reaches the lowermost position, it immediately starts to move upward across the magnetic field at the same rate it was originally moving downward across the field, and, as a result, the value of the induced e.m.f. will be the same but its direction will be exactly opposite what it was originally. This fact is shown diagrammatically in Fig. 4 by the line *B'A'*, which is parallel to the zero line and exactly the same distance below the zero line as the line *AB* is above the zero line. The lengths of the lines *AB* and *B'A'* are drawn to represent time to any convenient scale; thus each inch may correspond to one second, etc.

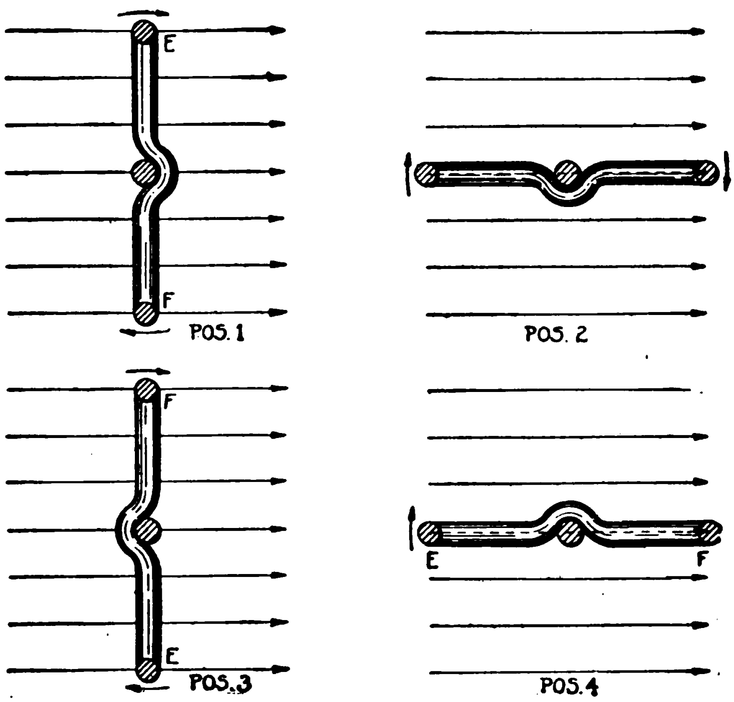

Fig. 8. Four Different Positions of a Loop as It Revolves in a Magnetic Field

Action of Loop. The arrangement just described may be greatly improved upon by revolving a loop of wire in a magnetic field, as shown in Fig. 7. Four positions of the loop are shown in cross-section in Fig. 8, and the e.m.f. induced in the loop for these different positions may be determined as follows: In position *1* the plane of the loop is perpendicular to the direction of the magnetic field, and if the loop be rotated a small angle about its axis, there will be no e.m.f. induced in it because there are no magnetic lines cut by any part of the loop. The two sides of the loop will be moving parallel to the magnetic field, and hence cutting no lines of force; while the planes in which the two ends move are parallel to the direction of the magnetic field, and hence the ends will never cut across any of the lines of force forming the magnetic field, regardless of the angular position of the coil, so long as the axis of the loop is perpendicular to the direction of the magnetic field.

In position *2* the plane of the loop is parallel to the magnetic field and the two sides of the loop are moving perpendicular to the magnetic field for an instant while the loop is in this position. Since the sides of the loop are moving perpendicular to the direction of the magnetic field, when the loop is in position *2* they will be cutting the magnetic lines at the greatest possible rate.

In position *3* the plane of the loop is perpendicular to the direction of the magnetic field and the e.m.f. induced in the two sides is zero, for the same reasons as those given for position *1*. In position *4* the plane of the loop is parallel to the direction of the magnetic field and the two sides are moving perpendicular to the direction of the magnetic field just as explained for position *2*. In position *2*, however, the side *E* is moving downward across the magnetic field and the side *F* is moving upward across the magnetic field, while in position *4* just the reverse is true; that is, side *E* is moving upward across the magnetic field, and side *F* is moving downward across the magnetic field. The e.m.f. induced in the two sides will be in opposite directions for all positions of the loop as you look along the two sides, but it will be observed that they are acting together around the loop rather than opposing each other, for all positions of the loop.

From position *1* to position *3*, the side *E* is moving downward across the magnetic field and the side *F* is moving upward across the field, while from position *3* back to position *1* the side *E* is moving upward across the magnetic field and the side *F* is moving downward. As a result of this relation between the direction of motion of the sides of the loop and the direction of the magnetic field, there will be an electrical pressure induced in the loop which will act around the loop in a certain direction while the loop is rotating from position *1* to position *3* and around the loop in the opposite direction while rotating from position *3* to *4* and on back to position *1*, or the starting point.

VARIATIONS OF E.M.F. IN ONE REVOLUTION. The value of the e.m.f. in the loop does not remain constant, but changes in value as the position of the loop in the magnetic field changes, the reason being that the velocity of the sides across the magnetic lines of force for a certain constant angular rotation of the loop is continuously varying in value. This can be proved easily by counting the number of fine lines the loop or conductor crosses in Fig. 9 when moving from 0° to 20° and comparing them with the number of lines crossed for similar distances in other parts of the revolution. They are as follows:

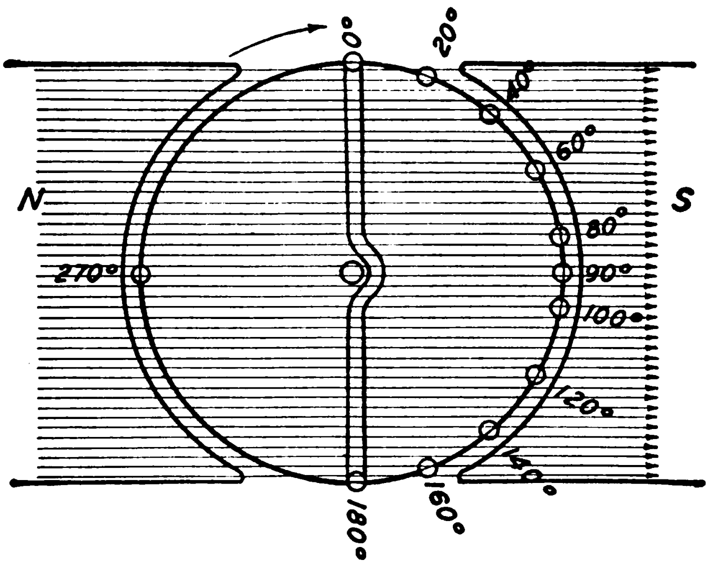

Fig. 9. Diagram Showing Variations in Number of Lines of Force Cut During a Revolution of an Armature Conductor

From 0° to 20° — 1 Line
From 20° to 40° — 4 Lines
From 40° to 60° — 5 Lines
From 60° to 80° — 6 Lines
From 80° to 100° — 7 Lines
From 100° to 120° — 6 Lines
From 120° to 140° — 5 Lines
From 140° to 160° — 4 Lines
From 160° to 180° — 1 Line
....

The number of lines crossed as the conductor or loop rotates from 180° through 270° to 360° is the same as 0° to 180°. You could make Fig. 9 very large in size and draw many fine lines and get more accurately the number of lines crossed in different parts of a revolution. In fact, you could determine the number of lines of force crossed for each degree from 1° to 90°. However, this work is not necessary because the mathematicians have prepared tables that will give us these comparisons. They call these tables "sine of an angle" and use a symbol like this θ as an abbreviation to indicate the angle. These tables are often called *"Sine Tables"* and are given in all books on trigonometry. By using these sine tables you can easily determine what part of the maximum number of lines of force are being crossed at any particular angle.

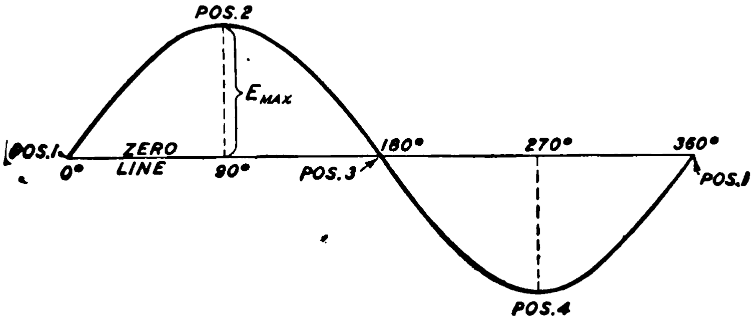

Fig. 10. Curve Representing Variation in Value of Electromotive Force Induced in a Loop That Is Rotated at a Uniform Angular Velocity in a Uniform Magnetic Field

Since the value of e.m.f. or voltage produced in the conductors depends upon the number of "lines of force" crossed, these sine tables will tell us what part of the maximum voltage is produced at any position of the conductors or loop. These values can be plotted as a curve, Fig. 10, in which the maximum voltage produced (abbreviated E_{max}) in position 2 of the loop, Fig. 8, is multiplied by the sine of the different number of degrees. This curve, Fig. 10, is called a sine curve because the height of the curve above the zero line at different places is obtained by the use of these sine tables. The distances along the zero line, Fig. 10, are divided into degrees from zero to 360°, but only 90°, 180°, 270°, and 360° are marked; these correspond to the position of the loop in Fig. 8. The distances along the zero line correspond to the values of the angle θ. Such a curve is called a sine curve.

EFFECT OF MORE LOOPS. The e.m.f. may be increased by adding more turns to the loop and connecting these turns in series so that the e.m.f. induced in the different turns acts in the same direction around the loop.

The complete set of positive and negative values represented in Fig. 10 constitutes what is called a cycle. A complete set of positive or negative values constitutes what is called an alternation. There are always twice as many alternations as there are cycles. The number of complete cycles that occur in one second is called the frequency. In Fig. 10 one revolution of the loop constitutes a cycle, or two alternations; and if the loop is made to revolve at the rate of 60 revolutions per second, the frequency of the induced e.m.f. will be 60 cycles.

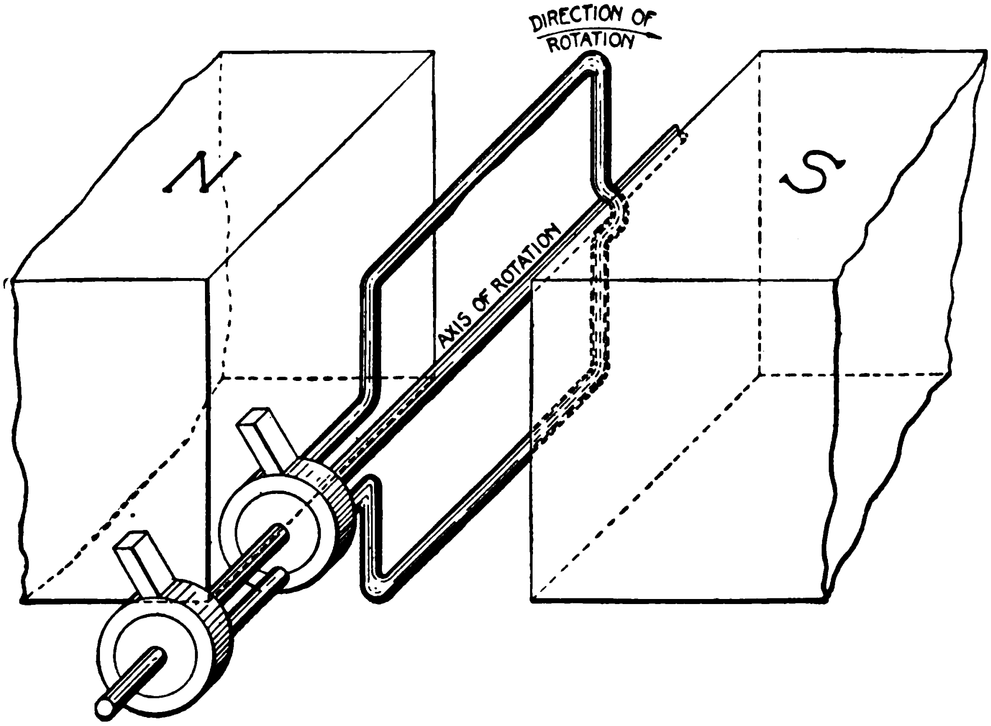

Fig. 11. Simple Alternating-Current Generator

FUNCTION OF SLIP RINGS. In order to make use of the e.m.f. generated in the loop, Fig. 7, in producing a current in an electrical circuit, it is necessary to provide some means of connecting the loop in series with the circuit in which the current is to be produced. Such an electrical connection may be provided by opening up the loop and connecting the two ends thus formed to two continuous metal rings, mounted on the axis of the loop and insulated from each other. Upon these rings are two metal or carbon brushes, connected to the external circuit, as shown in Fig. 11. Such a device constitutes a simple alternating-current generator.

FUNCTION AND OPERATION OF TWO-PART COMMUTATOR. As the loop of wire in Fig. 11 is made to revolve, an e.m.f. will be induced in it, and this e.m.f. will reverse in direction twice every revolution, as shown by the curve in Fig. 10. If the external circuit be closed, the alternating e.m.f. induced in the loop will produce an alternating current in the circuit. Such a current is not suitable for all purposes, as, for example, charging storage batteries, and must be changed to a unidirectional or direct current. It is the function of the commutator to change the alternating current in the loop into a direct current in the external circuit and at the same time provide the necessary electrical connections between the loop and external circuit.

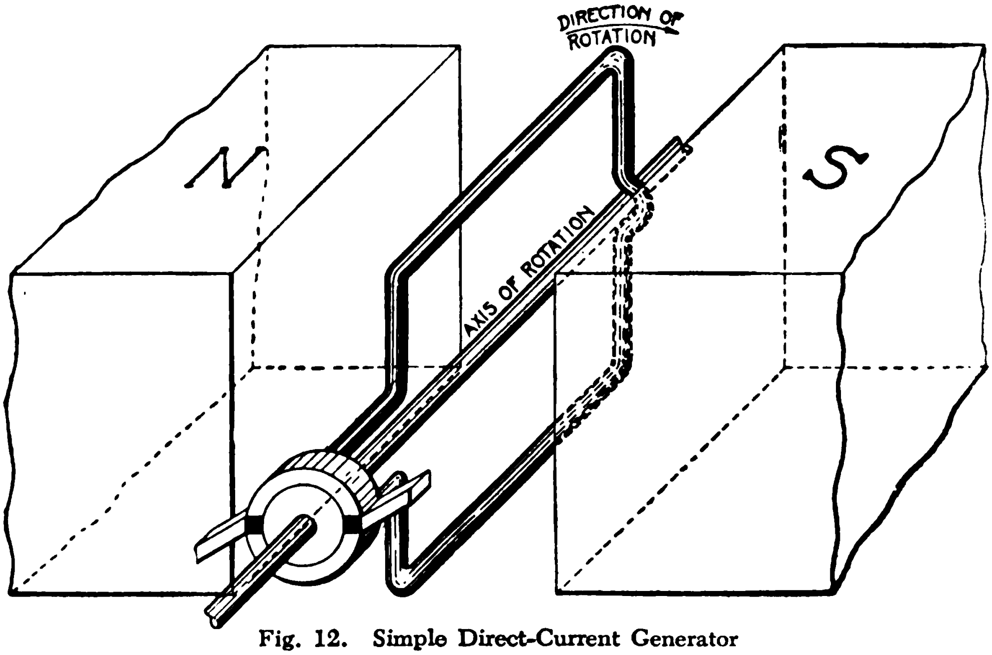

Fig. 12. Simple Direct-Current Generator

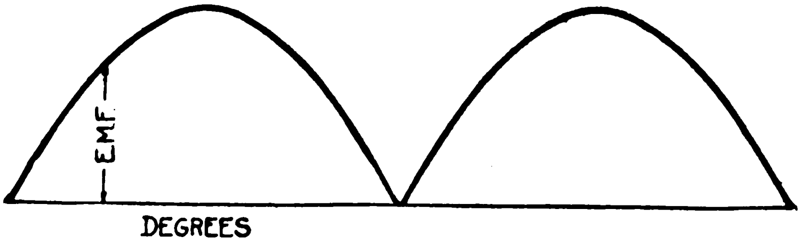

Fig. 13. Curve Representing Variation in Value of Electromotive Force between Brushes of Direct-Current Generator Shown in Fig. 12

The simplest form of commutator consists of a metal ring divided into two equal parts and mounted on a tube of insulating material, the two halves of the ring being insulated from each other. Each half of the ring should be connected to one of the ends of wire formed by opening up the loop, Fig. 12. The metal parts composing the commutator are called segments. The two segments in the commutator are shown in Fig. 12. The electrical connection to the external circuit is made by means of suitable brushes which make electrical contact with the segments of the commutator. Two brushes are required with a two-part commutator and single loop, as shown in Fig. 12, and these brushes should be equally spaced on opposite sides of the commutator, and in such a position that the insulation between the segments of the two-part commutator is exactly in the middle of the brushes when the plane of the loop is perpendicular to the direction of the magnetic field, or the induced e.m.f. in the loop is zero. A two-part commutator of this kind will reverse the connections of the loop of wire with respect to the external electrical circuit when the e.m.f. in the loop is zero and the e.m.f. acting on the external circuit always will be in the same direction and may be represented graphically by a curve

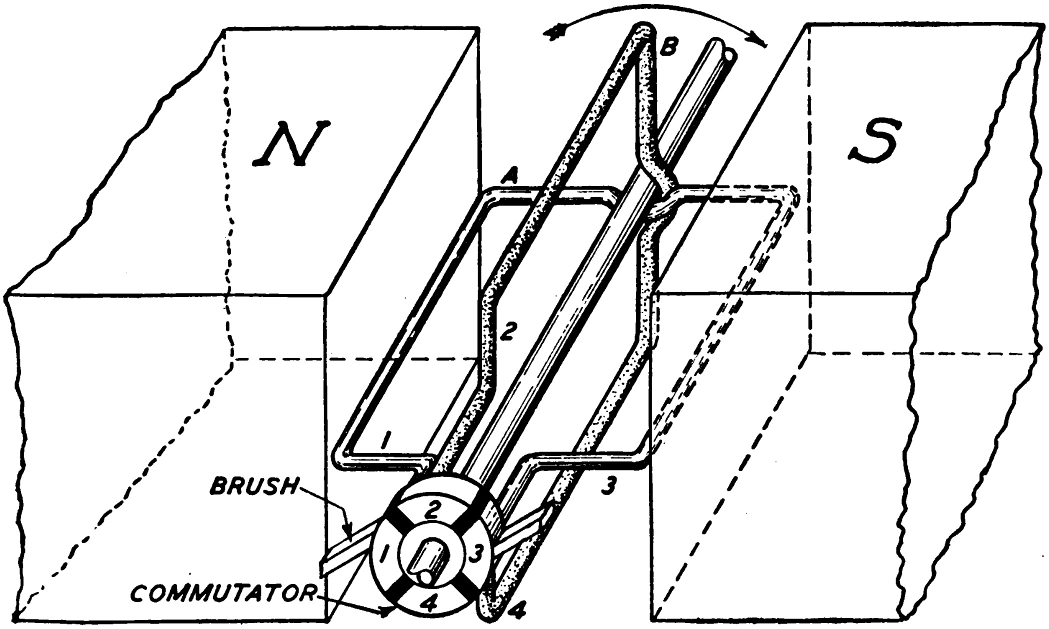

Fig. 14. Direct-Current Generator Composed of Two Loops of Wire and a Commutator of Four Segments

such as the one shown in Fig. 13. This kind of an e.m.f. is called a pulsating e.m.f. because it pulsates in value at regular intervals; it is, however, continuous in direction. In order to produce an e.m.f. nearer constant in value more commutator segments and loops of wire must be used.

OPERATION OF FOUR-PART COMMUTATOR AND TWO LOOPS OF WIRE. The fluctuation in the value of the e.m.f. between the brushes with the arrangements shown in Fig. 12, can be reduced by using two more commutator segments and a second loop. In this case the metal ring is cut in four parts instead of two, thus forming a commutator composed of four segments instead of two. The two loops are placed at right angles to each other and the terminals of each loop are connected to commutator segments that are opposite to each other instead of adjacent to each other. The connections of the loops and segments are shown in Fig. 14. Two brushes are required, and they should be placed exactly opposite each other and in such a position around the commutator that they pass from one segment to the next when the planes of the two loops are making angles of 45 degrees with a plane perpendicular to the direction of the magnetic field. The proper position of the brushes is shown in Fig. 14. Let us now consider the operation of this machine. Starting with loop *A* parallel to the magnetic field, loop *B*, which is at right angles to loop *A*, will be perpendicular to the direction of the magnetic field. When the loops are in this position the brushes should be in the center of the segments connected to loop *A*. Now as the combination of loops and commutator (called the armature) rotates, the e.m.f. induced in loop *A* decreases in value and the e.m.f. induced in loop *B* increases in value (it is to be remembered at the start the e.m.f. in *A* is at its maximum value and the e.m.f. in *B* is zero). When the armature has turned through an angle of 45 degrees, the commutator segments connected to loop *A* move from under the brushes and the commutator segments connected to loop *B* move under the brushes. This results in loop *B* now being connected in series with the external circuit instead of loop *A*. Loop *B* will remain in electrical connection with the external circuit for the next 90 degrees' rotation of the armature, or one quarter turn, when the segments connected to

B move from under the brushes and those connected to *A* move under the brushes. From the above statements and a careful inspection of Fig. 14 it is apparent that the loops *A* and *B* are alternately connected to the external circuit, and each time either of them is connected it is for one quarter of a revolution of the armature. The e.m.f. between the brushes varies in value, but it will never drop to zero value as with the single loop. The connections of the loops are changed when they are making an angle of 45 degrees with a plane perpendicular to the direction of the magnetic field and the e.m.f.'s induced in the loops at this instant are equal in value and equal to 0.707 of the maximum e.m.f. induced in either loop when its plane is parallel to the direction of the magnetic field. This results in the e.m.f. between the brushes fluctuating in value between a maximum value and 0.707 of this maximum value. The fluctuation in e.m.f. for one complete revolution of the armature is shown in Fig. 15.

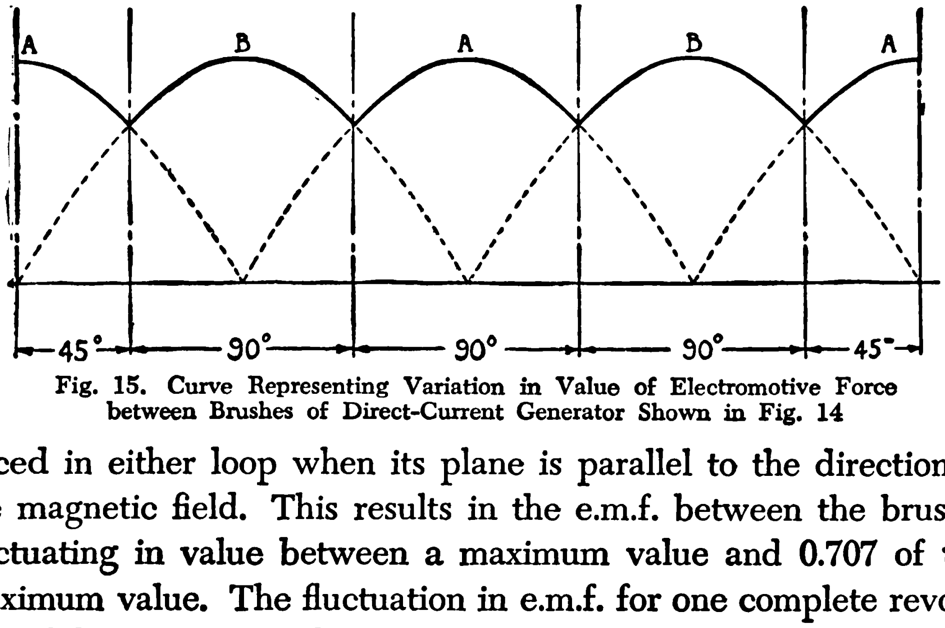

Fig. 15. Curve Representing Variation in Value of Electromotive Force between Brushes of Direct-Current Generator Shown in Fig. 14

OPERATION OF SIX-PART COMMUTATOR AND THREE LOOPS OF WIRE. The fluctuation in the value of the e.m.f. between the brushes with the arrangement described in the preceding section may be decreased by using three loops of wire and a commutator composed of six segments. The terminals of each loop should be connected to two segments exactly opposite each other and the brushes should be exactly opposite each other and in such a position that they are in the center of the commutator segments connected to a loop when that loop is in a position parallel to the direction of the magnetic field, or when the e.m.f. induced in the loop is at its maximum value. The arrangement of the loops, brushes, and commutator segments is shown in Fig. 16. Now as the armature rotates, the e.m.f. induced in loop *A* decreases in value, the e.m.f. induced in *B* decreases in value, and the e.m.f. induced in *C* increases in value. When the armature has turned through an angle of 30 degrees the segments connected to the loop *A* move from under the brushes, and the segments connected to loop *C* come into contact with the brushes and remain in contact for a rotation of the armature of 60 degrees, or one-sixth revolution. When the segments connected to loop *C* leave contact with the brushes, the segments connected to loop *B* make contact, and

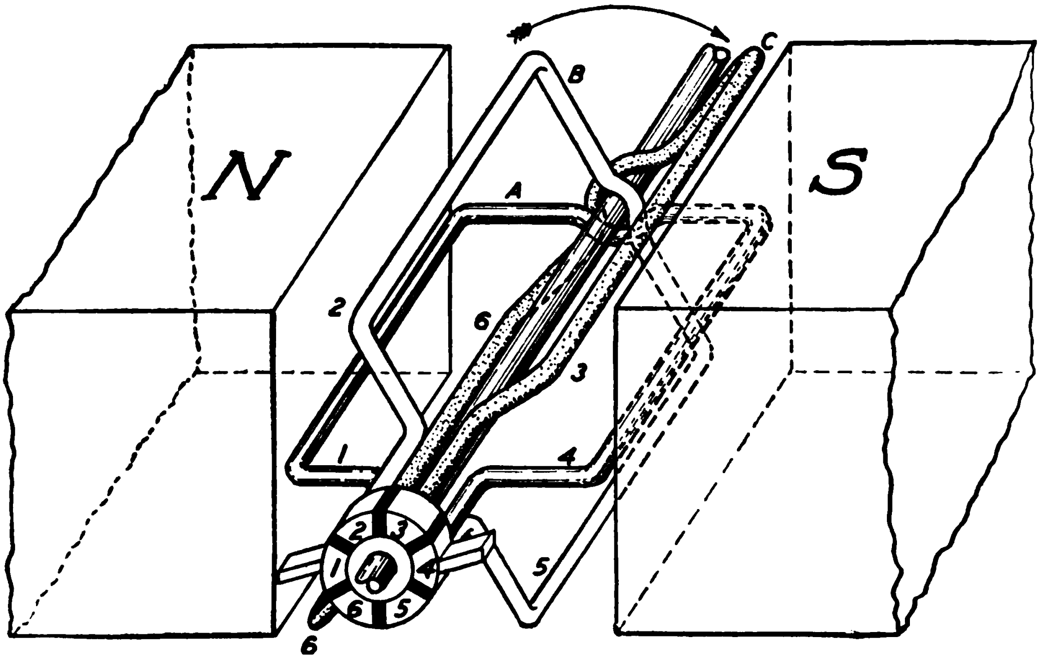

Fig. 16. Direct-Current Generator Composed of Three Loops of Wire and a Commutator of Six Segments

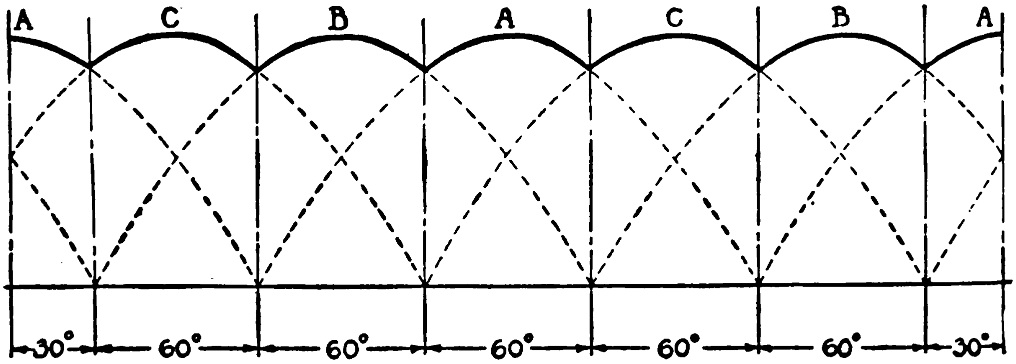

Fig. 17. Curve Representing Variation in Value of Electromotive Force between Brushes of Direct-Current Generator Shown in Fig. 16

remain in contact for one-sixth revolution, then loop *A* comes into contact again for one-sixth revolution; then loop *C* for one-sixth revolution, loop *B* for one-sixth revolution, and back to loop *A* for an angular movement of 30 degrees. This brings the armature back to the starting point. The fluctuation in e.m.f. for one complete revolution of the armature is shown in Fig. 17.

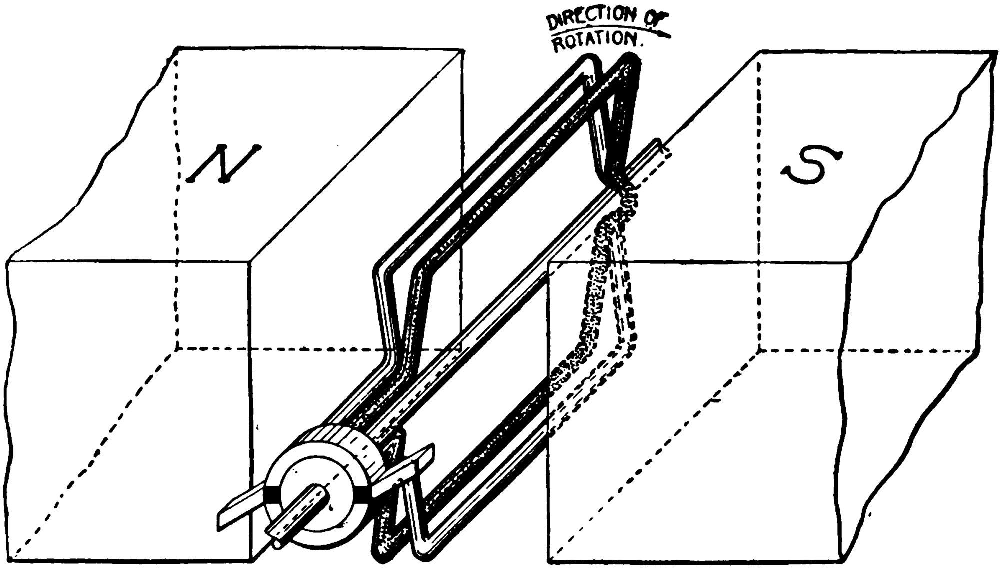

Fig. 18. Direct-Current Generator Composed of Two Loops of Wire and a Commutator of Two Segments

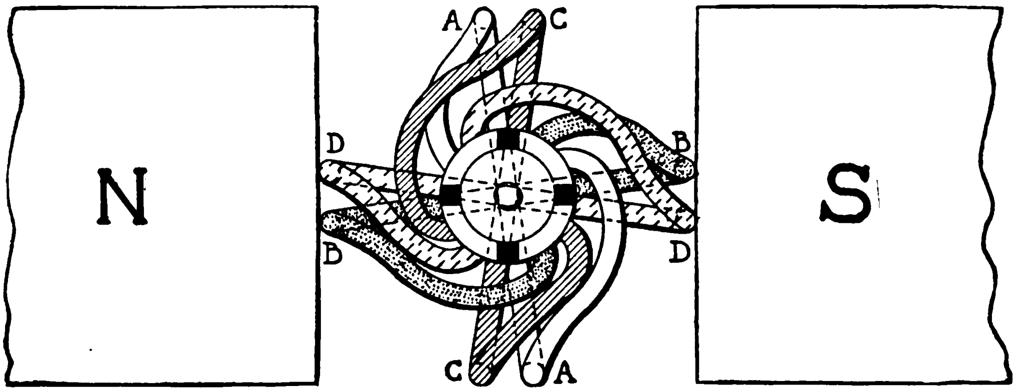

Fig. 19. Direct-Current Generator Composed of Four Loops of Wire and a Commutator of Four Segments

OPERATION OF TWO-PART COMMUTATOR AND TWO LOOPS OF WIRE. Two loops of wire may be connected in parallel between two commutator segments as shown in Fig. 18. The e.m.f. between the brushes will be the same as though a single loop of wire were used, but the current the armature is capable of delivering will be doubled if the wire used in winding the loops is of the same size as that used in winding the single loop. The variation in the e.m.f. between the brushes for such a combination is shown in Fig. 13.

OPERATION OF FOUR-PART COMMUTATOR AND FOUR LOOPS OF WIRE. An armature may be formed by interconnecting four loops of wire and four commutator segments. The connections are shown in Fig. 19. Each loop has its terminals connected to adjacent commutator segments. The brushes must be broad enough to bridge the insulation between adjacent segments, and they are mounted on the commutator in such a position that they short-circuit the loops when the sides of the loops are moving parallel to the magnetic field.

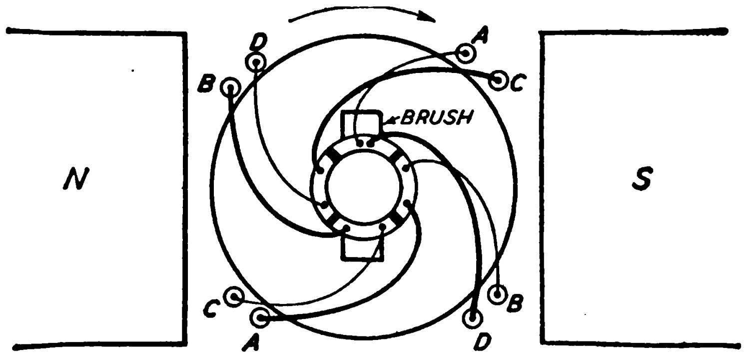

Fig. 20. Position of Conductors and Brushes after the Armature in Fig. 19 Has Rotated One Eighth of a Revolution

An inspection of Fig. 19 will assist you in understanding the following statements. When the armature is in the position shown in Fig. 19, the e.m.f. induced in the loops *A* and *C* is zero, and the e.m.f. induced in the loops *B* and *D* is a maximum. Of course, loops *A* and *C* are short-circuited by the brushes, but no damage results as there is no e.m.f. induced in these loops in this position. Loops *B* and *D* are connected in parallel between the brushes, and the e.m.f. between the brushes is that induced in either loop *B* or *D*, which is supposedly the same. Now, as the armature rotates from the position shown in Fig. 19, the e.m.f. in loops *B* and *D* decreases in value and the e.m.f. in the loops *A* and *C* increases in value, starting with zero. A small angular rotation of the armature results in the short-circuit of the loops *A* and *C* being removed, and the loop *A* is connected in series with the loop *B* and likewise the loop *D* is connected in series with the loop *C*, Fig. 20. This connection remains while the armature rotates for one-fourth revolution from that in Fig. 19, when the loops *B* and *D* are short-circuited by the brushes and the loops *A* and *C* are in parallel between the brushes. During this one-fourth revolution the e.m.f. induced in loops *B* and *D* decreased in value from a maximum to zero value, as shown by the curve *bd* in Fig. 21, and the e.m.f. induced in the two loops *A* and *C* has increased in value from zero to a maximum value, as shown by the curve *ac* in Fig. 21. The e.m.f. between the brushes is the sum of the e.m.f.'s and it is represented by the heavy curve in Fig. 21. The maximum value of this e.m.f. occurs when the loops are making an angle of 45 degrees with the position shown in Fig. 19, or they have turned one-eighth turn from the starting point, to the position in Fig. 20. The e.m.f. in all the loops is the same for this position of the armature and is equal to 0.707 of the maximum e.m.f. The total e.m.f. between the brushes is equal to twice this value, since two loops are in series, or it is equal to 1.414 times the maximum e.m.f. that can occur in any one of the loops. The e.m.f. between the brushes will fluctuate between the maximum value occurring in a single loop and 1.414 times this maximum value. With a four-loop armature there will be four of these pulsations for each revolution, as shown in Fig. 21. As the number of loops and segments is increased the amount of this fluctuation is decreased (the height of the rise and fall of voltage wave, Fig. 21) but the number of fluctuations per revolution is increased.

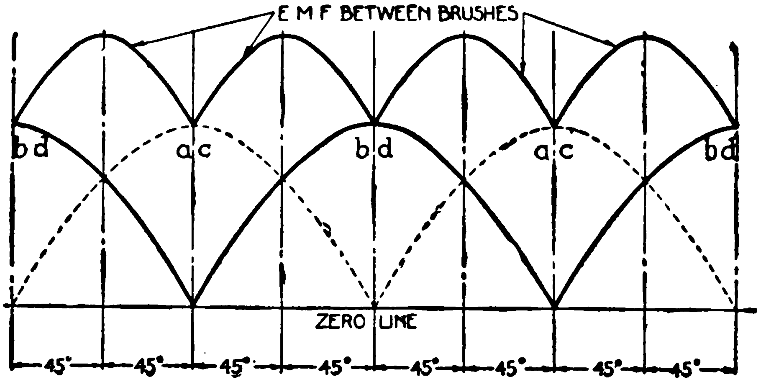

Fig. 21. Curve Representing Variation in Value of Electromotive Force between Brushes of Direct-Current Generator Shown in Fig. 19

In Fig. 22, the number of loops of wire and commutator bars has been increased from 4 to 8. Conductors *A, B, C,* etc., connect on the rear to similarly lettered conductors *a, b, c,* etc. In order to simplify the drawing these connections are not shown in Fig. 22. Note that the direction of the flow of current in the conductors is indicated by the dot or the plus sign inside the conductor; also the position of the brushes has been shifted to the horizontal center line of the poles. This enables the leads from the coil to the commutator bars to be shorter and more uniform in appearance. The position of the brushes can be changed by moving the leads from the coil to a different commutator bar. In most of the modern direct-current armatures, the coil leads are made about equal in length and the brushes are located in position shown in Fig. 22 in relation to the poles.

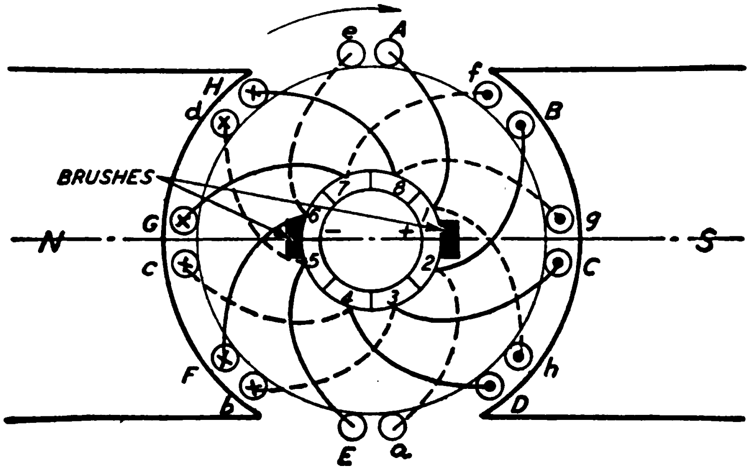

Fig. 22. Diagram of an Armature Having Eight Loops of Wire and Eight Commutator Segments

OPEN- AND CLOSED-CIRCUIT ARMATURE WINDINGS. In an open-circuit winding the different loops do not as a whole form a closed circuit, but each loop is in circuit only when the commutator segments to which it is connected are in electrical contact with the brushes. The windings shown in Figs. 14 and 16 are of the open-circuit type.

A closed-circuit winding is one in which the loops forming the winding are interconnected and form one or more closed circuits upon themselves, and each loop is always in circuit except when it is short-circuited by the brushes. The winding shown in Figs. 19, 20 and 22 is of the closed-circuit type.

Practically all modern armatures are of the closed-circuit type.

Chapter 6

Transmission Equipment

MAIN GENERATORS. The standard construction of the larger capacity railway generators includes a rolled steel frame (some of the smaller machines have cast steel frames) built of ample section for the mechanical and magnetic duties to which it is subjected. Feet or flanges are welded to this frame for supporting purposes. The inside of this rolled frame is then machined to insure an accurate seat for the pole pieces (usually eight main pole pieces in the larger sizes and four for the smaller capacities). A rigid end bracket is provided which bolts to the end of the frame ring and carries the brush holders and the anti-friction bearing supporting one end of the generator armature. (See Figs. 2 and 3.)

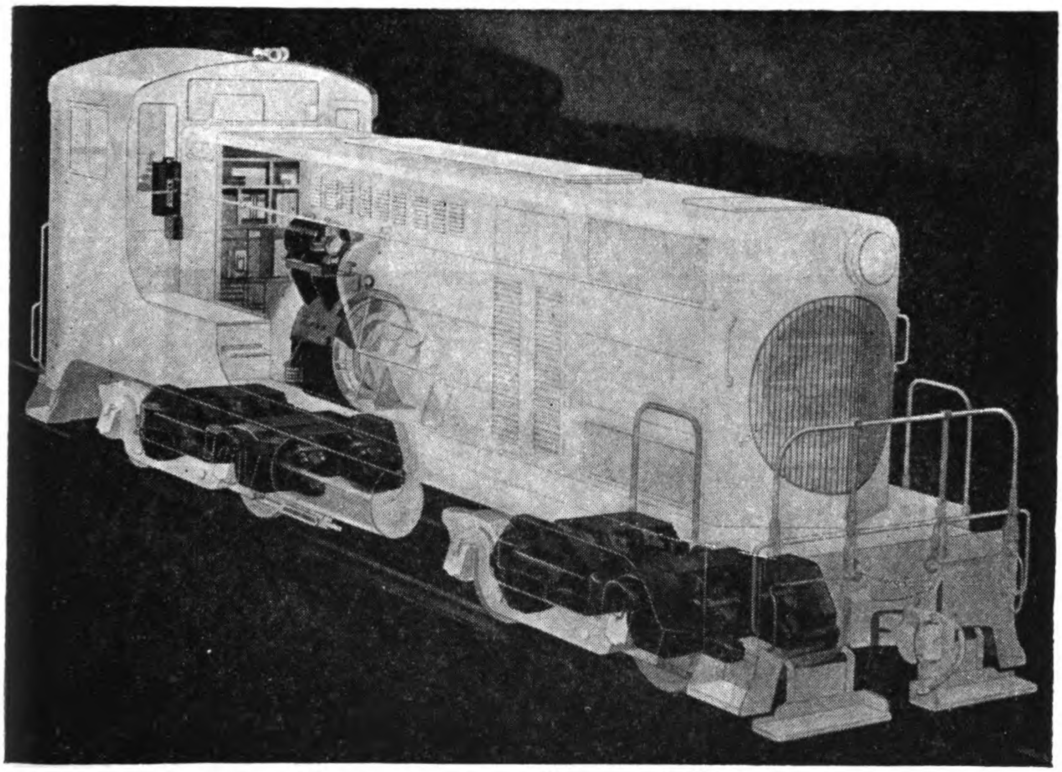

Fig. 1. Phantom View of Locomotive Showing Electrical Equipment in Black

The main pole pieces are of laminated steel carefully riveted together and held to the frame by tap bolts or studs through the frame. The field coils are impregnated and baked with insulating compounds to guard against movement and chafing within the coil and to permit free flow of the internally developed heat to the surfaces.

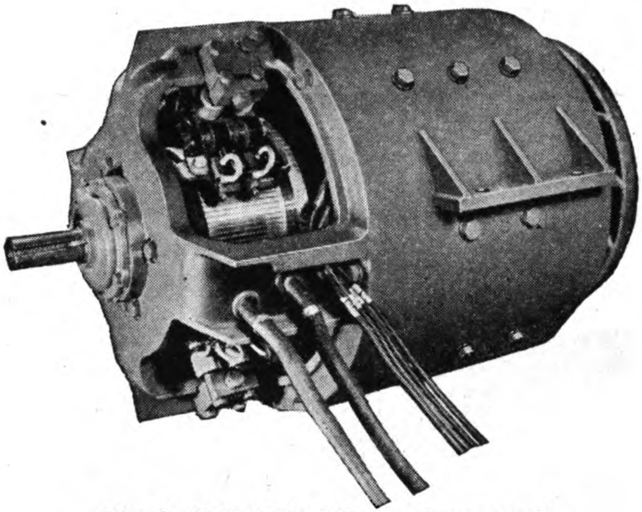

Fig. 2. Rolled Steel Frame Generator for 150 hp. 1800 r.p.m. Diesel Engine

Fig. 3. Roller Bearing Location and Assembly

The armature is a solid structure, as shown in Fig. 4, and built so as to withstand high speed and all of the vibrations (lateral and torsional) incurred in operating with a Diesel engine. It is dynamically balanced both before and after winding to reduce vibration, and it is supported at one end by the anti-friction bearing and at the other end by the engine crankshaft. Construction is such as to provide adequate ventilation without allowing pockets for the accumulation of dirt and moisture. A fan mounted on the rear of the spider is balanced before assemblv on the armature and it is arranged to draw air from the commutator end of the generator both through the armature core and air gap, also past the field coils, for removing the heat released in the generator windings and magnetic structure. (See Fig. 5.) The laminated steel armature core and the commutator are each mounted on its individual spider (the commutator spider being fastened to the armature spider) so that a shaft may be replaced without disturbing the armature, or a commutator may be removed without moving the steel core. In the smaller sizes of machines the armature spider is sometimes omitted to reduce the machine size, but the construction is still such that the shaft may be replaced without disturbing the assembly.

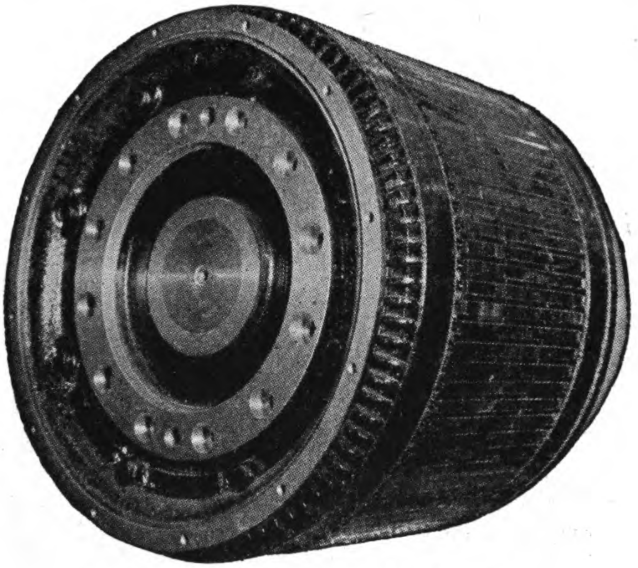

Fig. 4. Complete Generator Armature

Armature coils are form-wound, insulated, and pressed to size during their manufacture, to insure close fits. The armature is wound with these coils, heated, and then temporary bands are applied, using maple or steel strips in the top of each slot to press the coils solidly into place under the pressure of these temporary bands. The coil leads are then soldered to the commutator bars and the armature again heated, then dipped in an impregnating compound and baked. This insulating compound holds the coils firmly in place, allowing the temporary bands to be removed and the wedges and permanent bands to be applied. Another reheating and a final dip and bake precede the final check of the commutator for solidity and smoothness and the final dynamic balancing.

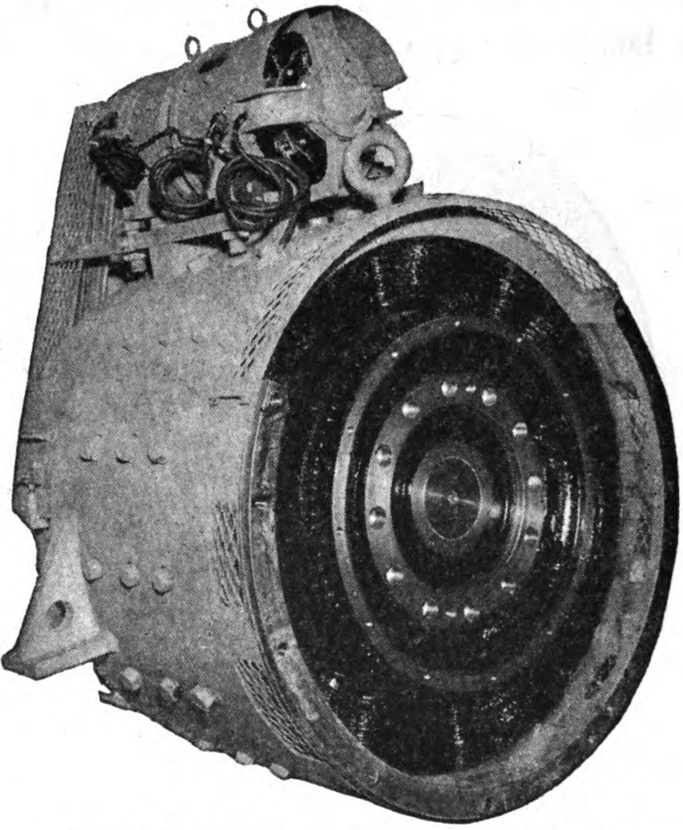

Fig. 5. Rear View of a Diesel Electric Generator

The method of holding the armature coils in place has an important bearing on the generator efficiency. Where steel bands were formerly used to hold the coils in the armature slots, Micarta wedges are now driven into grooves near the top of the slots, thus removing the necessity of having band wire in the vicinity of the armature core. The end windings are banded down solidly by non-magnetic band wire under controlled tension, as shown in Fig. 6. By the removal of these bands from the magnetic path, eddy current losses are reduced and the danger of loosening the band wire is minimized.

The insulation of the armature and field coils of a Diesel electric generator is Class B, which includes glass, asbestos, and mica. The American Institute of Electrical Engineers has determined that machines with this class of insulation are suitable to operate continuously with a temperature rise of 120° Centigrade for the armature and 130° Centigrade for the fields, corresponding to 248° and 266° Fahrenheit. Thus, for a day on which the thermometer registers 100° Fahrenheit, it is perfectly safe to operate these machines at a maximum internal temperature of 348° F. in the armature and 366° F. in the fields.

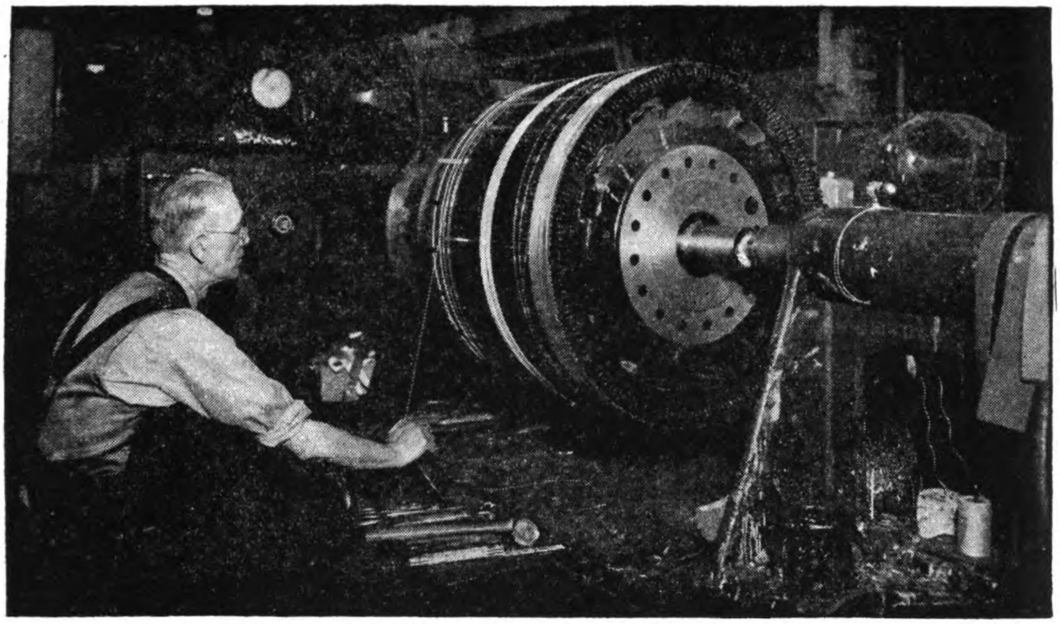

Fig. 6. Applying the Permanent Non-Magnetic Bands to an Armature Under Controlled Tension

TRACTION MOTORS. In the past, the manufacturers constructed most of the Diesel electric traction motors with a box type cast frame. Some of the motors for narrow gauge have been built with a split frame so that an armature could be removed without taking the whole motor out of the locomotive or railcar, but the box frame construction is so much more satisfactory that its use is almost universal. While some of the recent high-speed motors (using multiple gear reductions) have rolled steel frames, a recent development is an axle hung traction motor whose frame is welded from standard steel plates and shapes, resulting in a powerful motor whose magnetic paths may be more closely predetermined and which is stronger structurally than the cast frame motor. (See Fig. 7.)

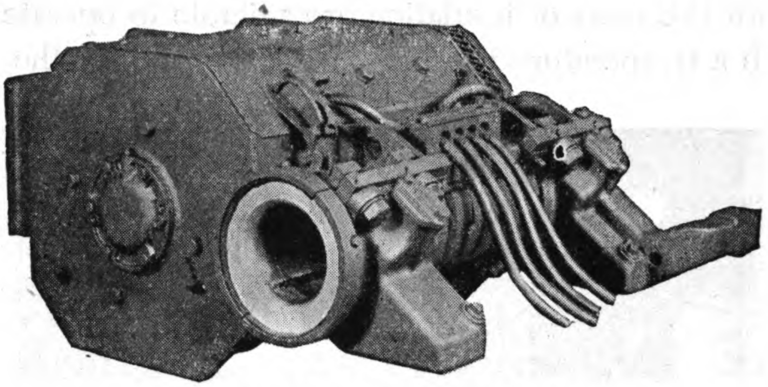

Fig. 7. Box Frame Traction Motor Having a Welded Steel Frame

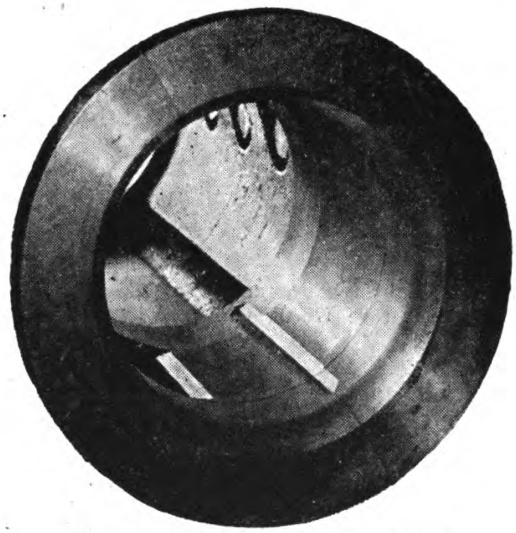

Fig. 8. Relief-Bored Axle Bearing

Internally the welded frame motor embodies the latest features, including Class B insulation throughout, as used in all modern high efficiency traction motors. The main and commutating pole pieces are bolted to machined seats in the frame by tap bolts or studs through the frame, these being sealed against the entrance of water. The pinion end housing is cast (because a casting is more practical for this detail) while the commutator end housing is fabricated.

These carry ample sized roller bearings for supporting the armature. Each axle bearing is of the split type to facilitate the removal of a motor from an axle and is constructed with a bronze shell, relief-bored at the ends to insure ample lubrication for the end thrust

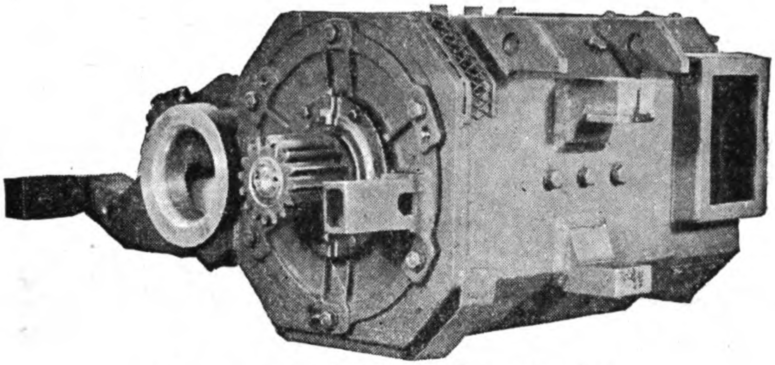

Fig. 9. Rear of Traction Motor Showing Double Nose Supporting Lugs

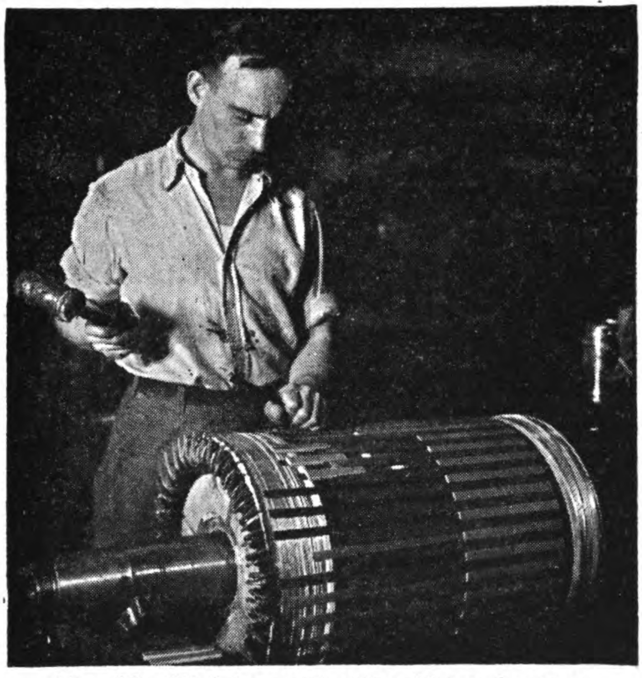

Fig. 10. Wedging a Traction Motor Armature

flange and to allow the bearing to seat itself properly. (See Fig. 8.) Each axle cap is held in place by two through-bolts and two tap bolts of high grade steel. A bolted-on axle dust guard prevents the ready entrance of dust and dirt from the roadbed. One brush holder per main pole is provided. Wiring "out of frame" is carefully roped and cleated to minimize vibration and thus prevent chafing.

The support of the motor opposite the axle is spring cushioned against shock for either direction of motion by a double nose suspension arrangement. Fig. 9 shows upper and lower supporting lugs.

Each main pole piece is constructed of laminated steel, rigidly riveted, and carries a series field coil. The series field coils and the commutating field coils are impregnated with an insulating compound and baked, to insure rigidity and to facilitate the flow of internally generated heat to the coil surfaces. A spring washer against each coil insures a firm field structure.

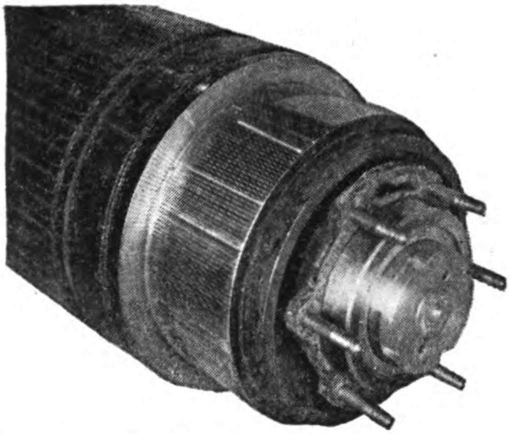

Fig. 11. Completed Traction Motor Armature

Fig. 12. Gearing for Traction Motor

The armature is of spider construction so that a shaft or a commutator may be removed without disturbing other portions of the assembly. In other respects it is also similar to the armature of the main generator. (See Figs. and 11.)

Spur gearing is used between the armature shaft and the axle, this being of forged steel treated for additional strength and long life. (See Fig. 12.)

AUXILIARY GENERATORS. These machines are of conventional railway design, insulated throughout with Class B insulation and embodying the same care of manufacture which characterizes the main generator and the traction motors. When the auxiliary generator is of small size (due to mechanical drive of the fans and compressor) this machine is usually mounted in a common frame with the exciter (Fig. 13), the two armatures being on the same shaft supported by two antifriction bearings.

Auxiliary generators or auxiliary generator-exciter sets are belt driven from a pulley mounted on the main generator shaft extension and may be mounted on the main generator (see Fig. 14), on the platform of locomotive, or on suitable brackets in the cab structure.

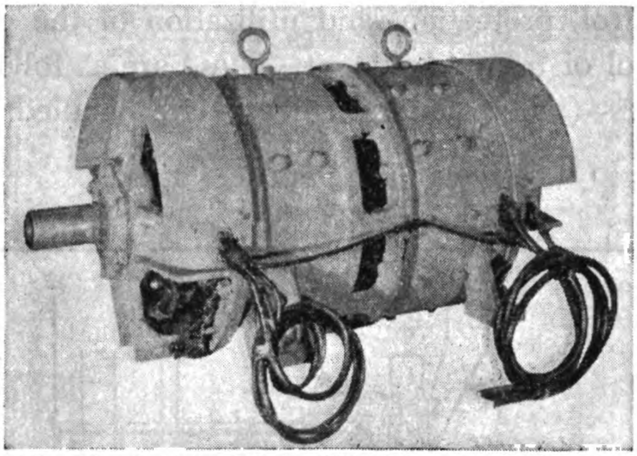

Fig. 13. Combination Auxiliary Generator-Exciter Set Arranged for Belt Drive

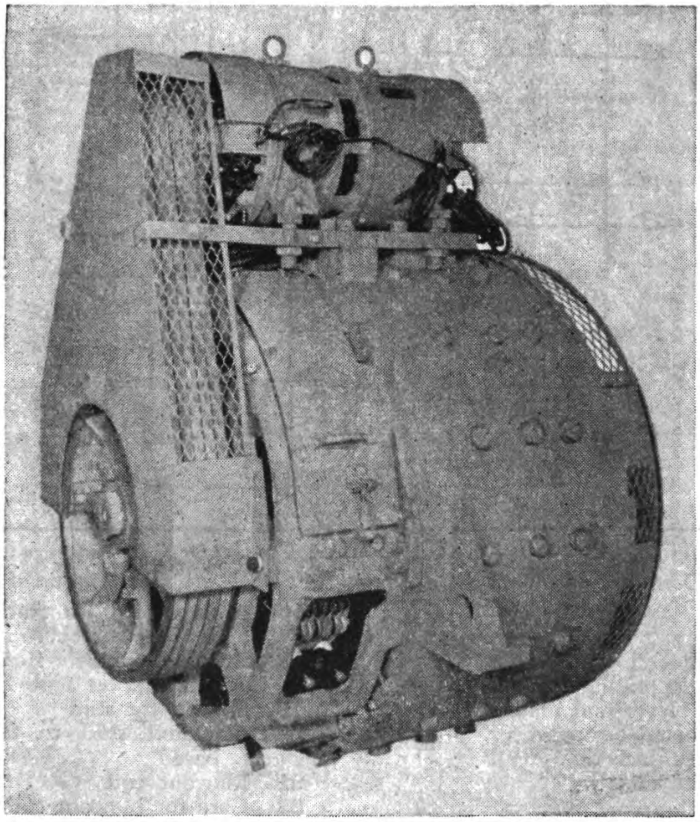

Fig. 14. Direct Driven Main Generator with Belted Auxiliary Generator and Exciter

CONTROL APPARATUS AND CIRCUITS. Any Diesel-electric control system must of necessity include a variety of items. There are, in general, eleven types of control items used for full and complete control, protection, and utilization of the engine power and for control of train movement. These are as follows:

Contactors—(where limited currents are handled, Fig. 15).

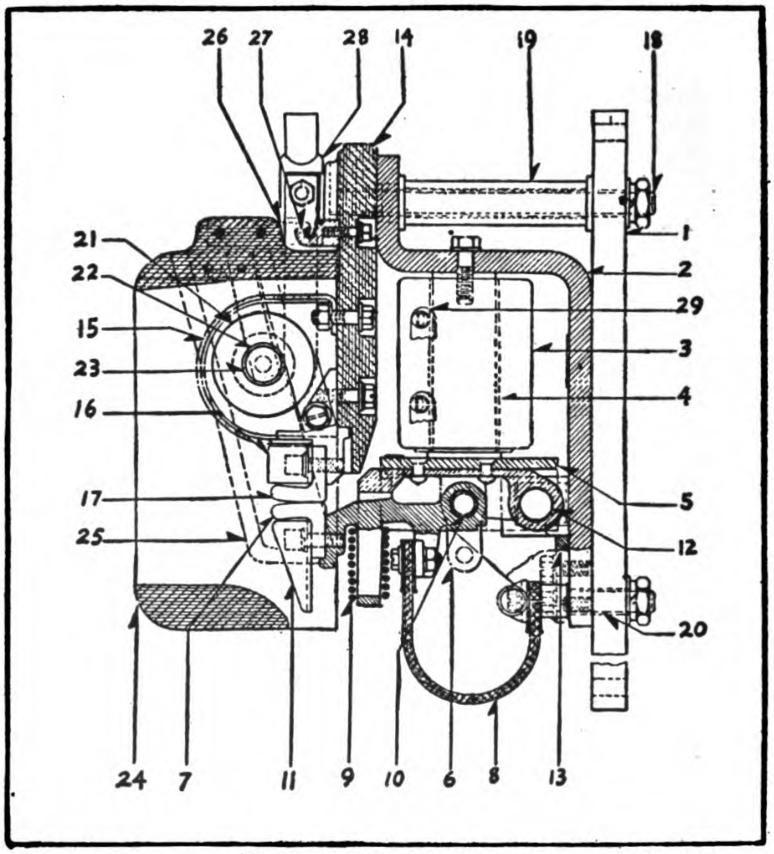

Fig. 15. Railway Contactor

Ref. No.	Description of Part
1	Base
2	Frame
3	Operating coil
4	Core for operating coil
5	Armature lever and plate
6	Moving contact support
7	Moving contact tip
8	Shunt with clips
9	Spring
10	Hinge pin for moving contact
11	Arcing horn
12	Hinge pin for armature
13	Bearing bracket
14	Base for stationary contact
15	Support with arc horn
16	Arcing horn for stationary contact
17	Stationary contact tip
18	Insulated stud for frame and contact support base
19	Spacer, for stud
20	Insulated stud to fasten shunt to base
21	Blowout coil
22	Core for blowout coil
23	Insulation tube for core
24	Arc box
25	Pole piece
26	Hinge side plate
27	Hinge for arc box
28	Copper tube terminal
29	Terminal clip

Electro-pneumatically Operated Unit Switches—(where large currents are to be interrupted, Fig. 16).

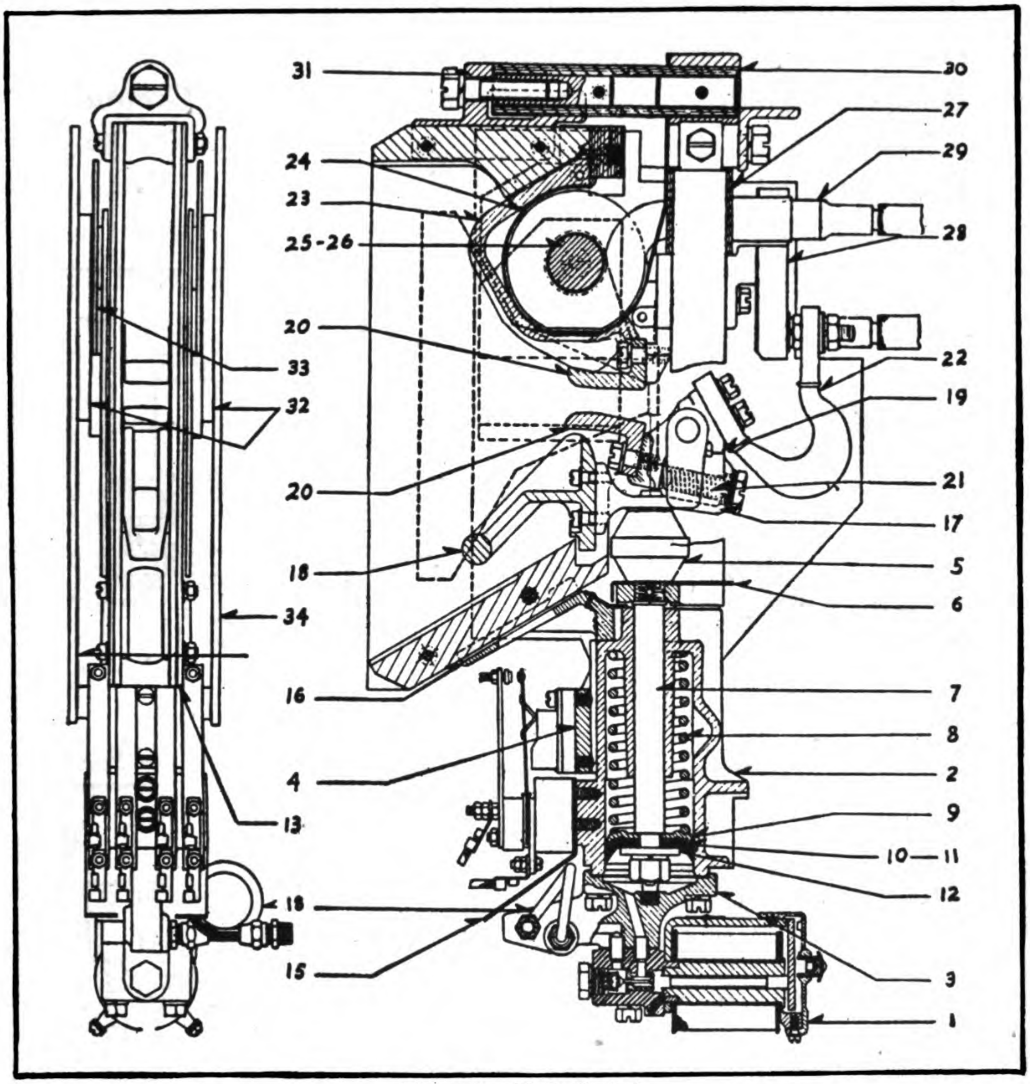

Fig. 16. Unit Switch

Ref. No.	Description of Part
1	Magnet valve
2	Air cylinder
3	Cylinder cap
4	Interlock bracket
5	Piston insulator
6	Insulation shield
7	Piston rod
8	Piston spring
9	Follower washer
10	Piston packing
11	Piston packing expander
12	Piston washer
13	Side bar, R. H.
14	Air connection
15	Insulation for interlock
16	Arc box guide
17	Contact support yoke
18	Lower arc horn
19	Contact support
20	Contact
21	Spring
22	Shunt
23	Upper arc horn with blowout coil
24	Insulation for blowout coil
25	Core for blowout coil
26	Insulation for core
27	Insulation spacer
28	Terminal base
29	Terminal
30	Insulation tube with plugs
31	Arc box bracket
32	Pole pieces
33	Pole piece insulation
34	Barriers

Traction Motor Reversers—(Fig. 17)
Controllers
Engine Governor Operators
Push Button Boxes for Auxiliary Circuits—(Fig. 18)
Relays: Regulating, Reverse Current, Transition, Ground Protection, Etc.
Knife Switches

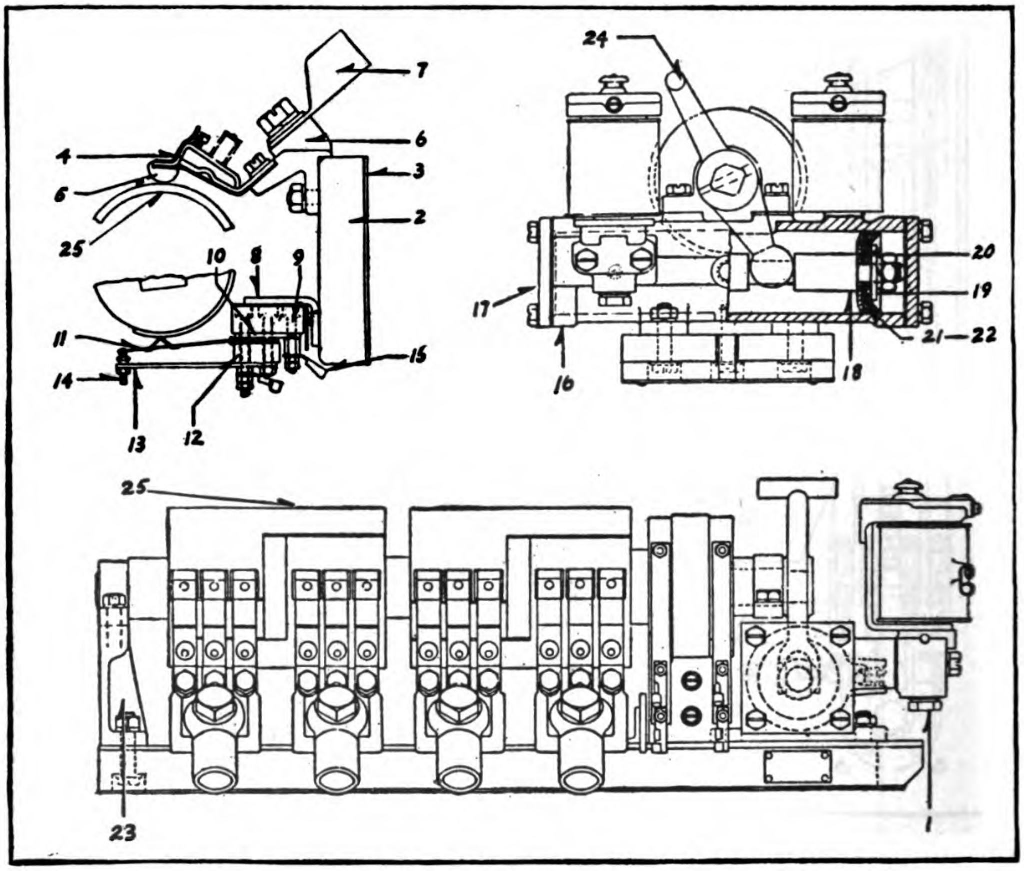

Fig. 17. Railway Reverser

Ref. No.	Description of Part	Ref. No.	Description of Part
1	Magnet valve	14	Contact
2	Finger board	15	Terminal clip
3	Insulation for board	16	Air cylinder
4	Main finger	17	Cylinder cap
5	Finger tip	18	Piston rod
6	Finger base	19	Piston washer
7	Terminal	20	Follower washer
8	Support	21	Expander
9	Finger block	22	Piston packing
10	Finger base	23	Bearing bracket
11	Finger	24	Cylinder lever
12	Spacer	25	Drum contacts
13	Contact support		

Resistors
Fuses
Meters

While these items may vary in size and arrangement, depending upon their purpose (such as contactors, different sizes being used for traction motor field shunting and for generator field circuits), all must be especially designed for railway service. It has been found by experience that equivalent apparatus which will operate successfully in industrial service cannot be operated without trouble on a railway vehicle.

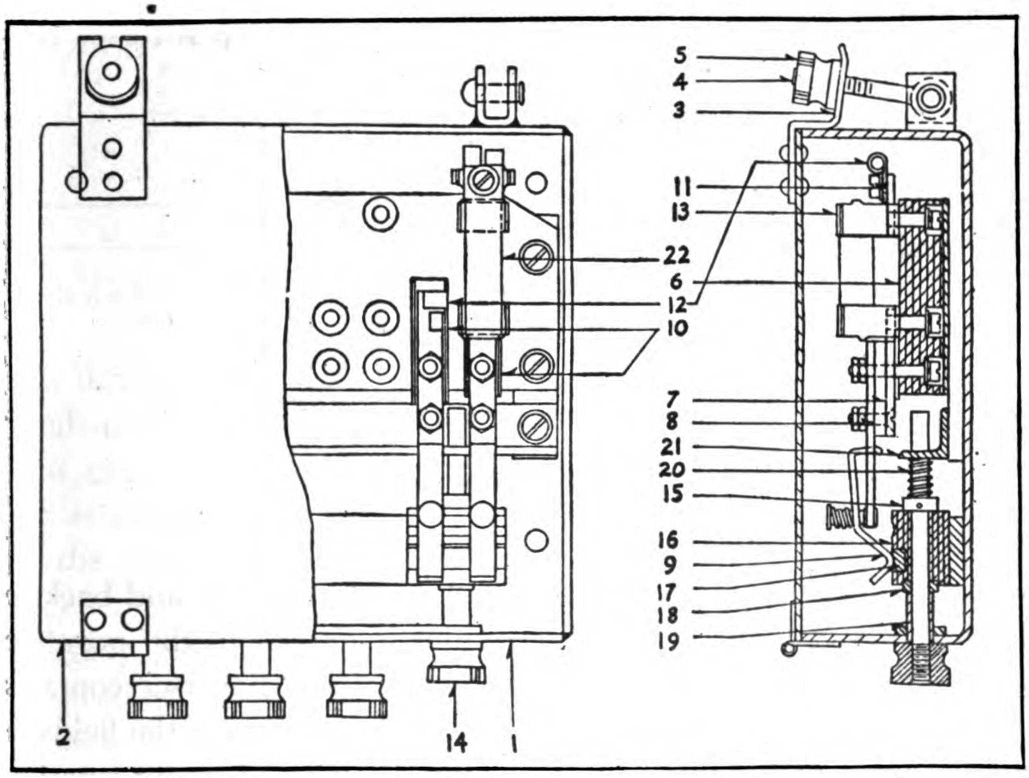

Fig. 18. Push Button Box

Ref. No.	Description of Part	Ref. No.	Description of Part
1	Box	13	Fuse clip
2	Cover with latch	14	Push rod
3	Latch	15	Collar
4	Eye bolt	16	Contact block
5	Thumb nut	17	Contact
6	Finger board	18	Collar
7	Finger base	19	Sleeve
8	Spacer	20	Spring, used on engine start button, etc.
9	Finger	21	Guide
10	Finger shields	22	Fuse
11	Terminal block		
12	Terminal clip		

KEYS TO THE STUDY OF DIESEL-ELECTRIC SYSTEMS. A Diesel electric equipment may consist of any desired combination of generators and traction motors, also, while the electrical circuits are basically the same, there are many ways in which these combinations may be connected. For the sake of simplicity, Fig. 19 shows a single generator (GEN) providing electrical power for two traction motors (No. 1 and No. 2), the latter being connected in parallel (with each other). Current flowing from the positive side of the generator (+) by way of conductor G+, divides and passes through two switches, P1 and P2 (when these are closed), to the traction motor armatures No. 1 and No. 2. After passing through these armatures the current flows to the respective reverser contacts, thence passing through the motor field windings and back to the reverser contacts, from which point it returns to the negative side of the generator (—) via conductor G—. Reverser contacts are arranged so that the current may be passed through the fields in one direction or the other to secure the direction of motor rotation desired. From this it may be seen that with the generator producing voltage and the switches P1 and P2 closed, the motors will tend to rotate and move the train. If the generator voltage is low the train may move slowly, while if the voltage is high it may travel fast, that is, the speed of each motor when developing a given tractive force will vary somewhat as the voltage varies.

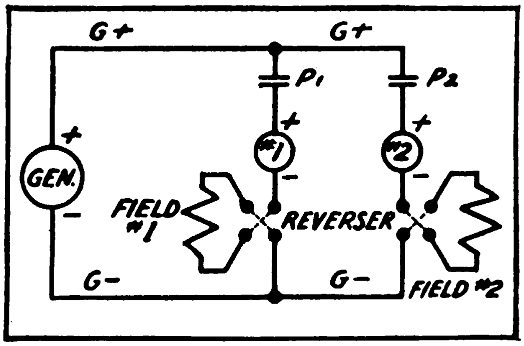

Fig. 19. Basic Power Circuits for Diesel-Electric Motor Power. Parallel Motors

It may be noted from Fig. 19 that the current which flows from the generator must be twice as great as that which flows through each motor. When starting a train, the heavy current required for each motor imposes double this current value on the generator, which is sometimes considered to be excessively severe for the generator. To reduce the generator current value during starting, then, the traction motors may first be connected in series and then later be connected in their normal parallel relation. These connections are shown by Fig. 20. In this instance, current first passes from the generator, through G+ conductor, through motor No. 1, through switch S (which is the first one to be closed), then through motor No. 2 and back to the generator via conductor G. In this manner full starting current equivalent to that of but one motor is all that is drawn from the generator. In this case, however, the maximum voltage which each motor gets is but half of that generated, so the minimum train speed with these connections is, roughly, half of the full train speed. As the train speeds up to half speed, however, the current drawn by the traction motors decreases to a value which will not overload the generator if the motors are connected in parallel. The second step of a train acceleration, then, is to close switch P1, open Switch S, and then close switch P2, which places both motors in parallel across the generator.

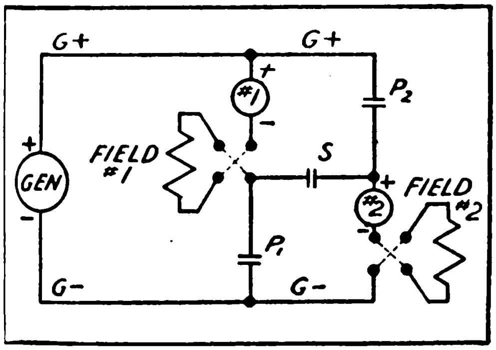

Fig. 20. Deviation from Basic Circuits for Diesel Electric Motive Power. Series, Parallel Motor Connections

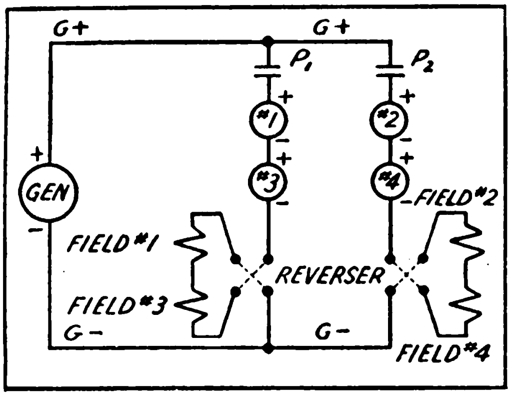

Fig. 21. Basic Power Circuits for One Generator and Four Traction Motors. Series, Parallel Connections

In most of the larger sizes of Diesel switching locomotives it is customary to use one engine and generator and four traction motors. Because it is easier to build a generator having double normal voltage than to build one having excessive current capacity, such switchers usually have two motors grouped permanently in series and two such groups connected in parallel or in the series, parallel relations similar to Fig. 20. Fig. 21 shows a 4-motor grouping.

Diagrams are usually available for Diesel electric motive power. After a study of Figs. 19, 20, and 21, it should be relatively simple to trace out the scheme of connections for any particular unit. It may be pointed out that the designing engineer who lays out a Diesel-electric transmission system first prepares a *schematic diagram* showing the scheme of electrical connections by a relatively simple line diagram embodying as few turns and crosses of the lines as possible, from which he later prepares the actual *wiring diagram* to correspond more nearly to actual locations and conduit runs of the motive power unit itself. Much more information as to the actual functioning of the equipment may be obtained from the schematic diagram than from the wiring diagram.

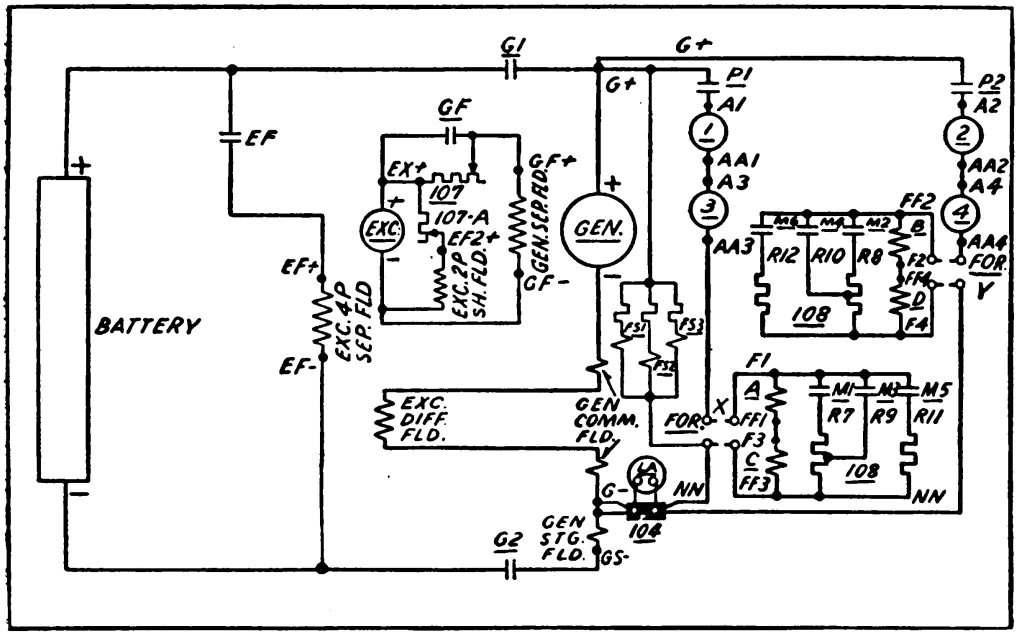

Fig. 22. Schematic Diagram of Main Circuits

Referring to Fig. 22, this diagram represents the main power circuits of a 1000 horsepower Diesel locomotive. Before following this through, it is necessary to identify each piece of apparatus. The various exciter and generator field coils are labeled and are readily distinguished. The other items are as follows:

EF, G_1, G_2, GF, M_1 *to* M_6 = Magnetic contactors.

P_1, P_2 = Pneumatically closed contactors.

GEN. = Main generator. *EXC.* = Exciter.

1, 2, 3, 4 = Traction motor armatures.
A, B, C, D = Traction motor fields. *107, 108* = Resistors.
LA = Load ammeter. *104* = Ammeter shunt.
X, Y = Reverser contacts. FS_1 *to* FS_3 = Voltage relay coils.

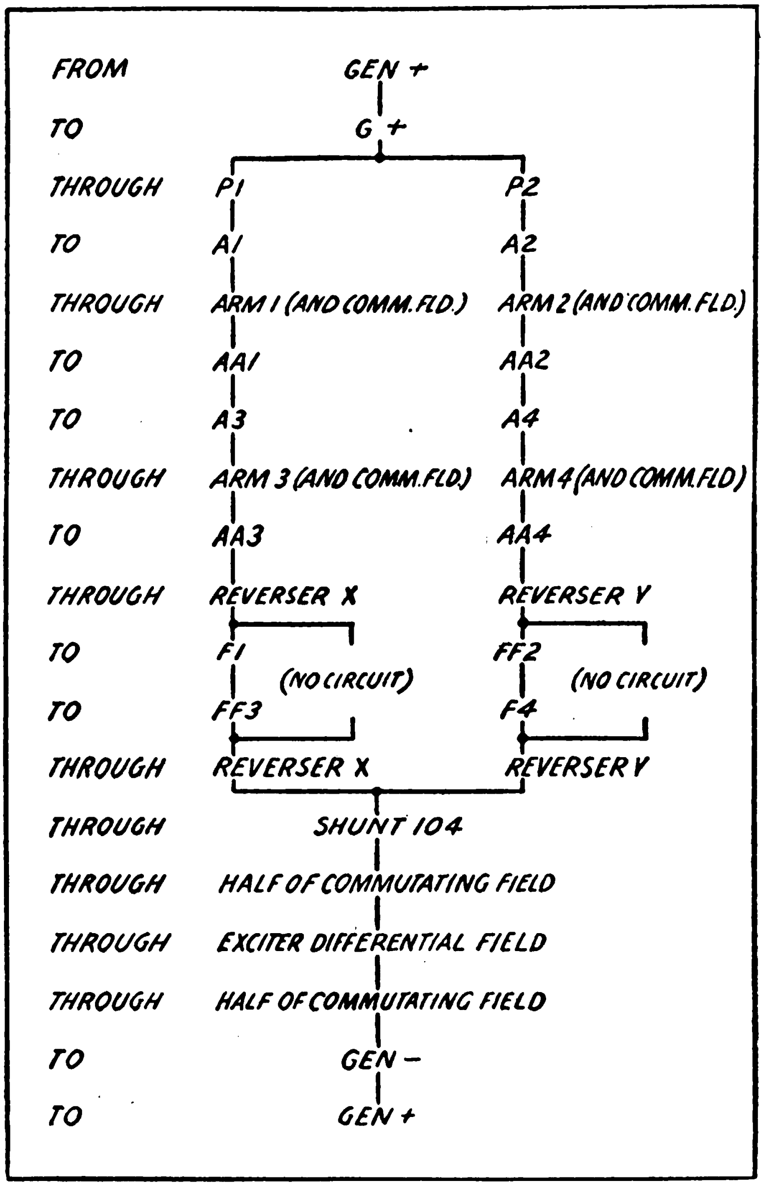

Fig. 23. Tracing Through Main Circuits

In tracing through the electrical connections of a diagram, it always simplifies the process if the initial starting point is taken as the positive (+) side of a source of electrical energy, such as a generator, a storage battery or a trolley wire (if any power is received from an outside source).

Figs. 23 to 26 show a method of following through the main power circuits of Fig. 22. Fig. 23 shows the first step in the application of propulsion power. As the train accelerates, it is desirable to shunt the traction motor fields to increase the speed, in which case the circuit reads as shown by Fig. 24.

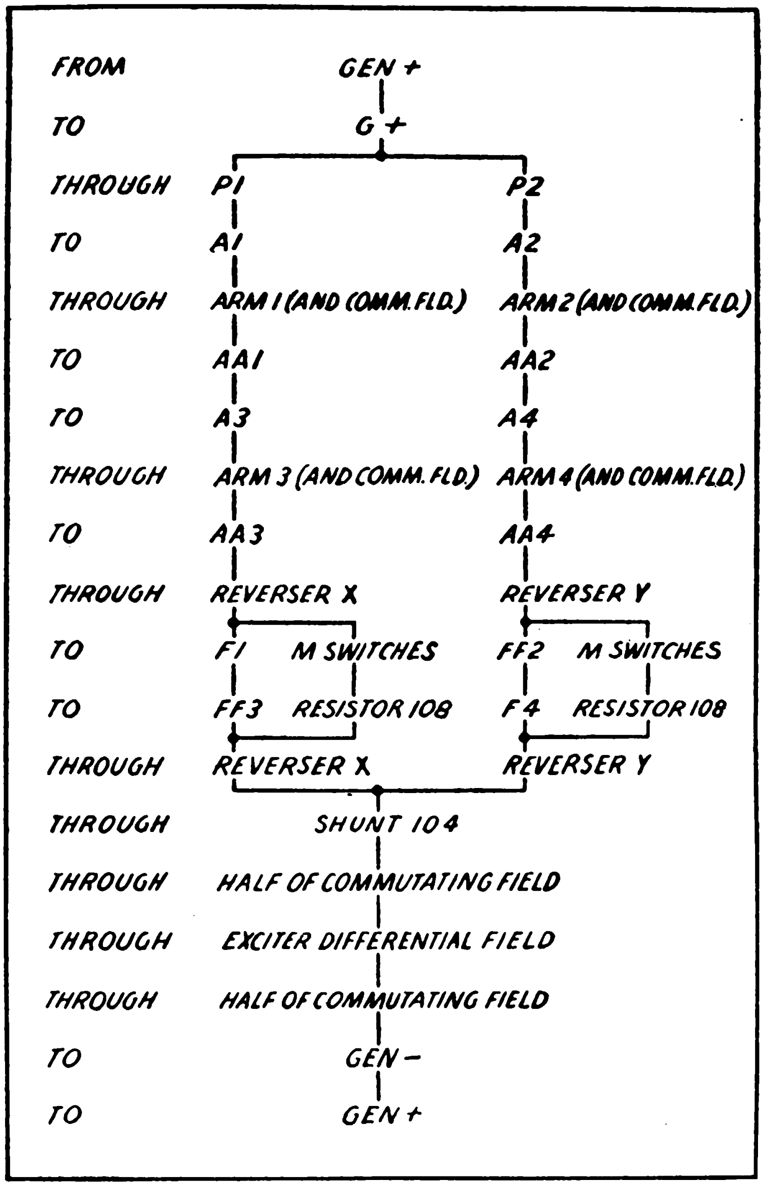

Fig. 24. Tracing Through Main Circuits

Fig. 25 traces the excitation circuits of the main generator, as shown by Fig. 22. One other function is shown in Fig. 22—that of starting the Diesel engine by using the main generator as a motor, the circuits being shown by Fig. 26. In this case, the exciter differential field has no effect, since the exciter circuits are not functioning. The starting field acts in the same way as the field of a series traction motor and causes the generator to rotate and thereby spin the engine for starting purposes.

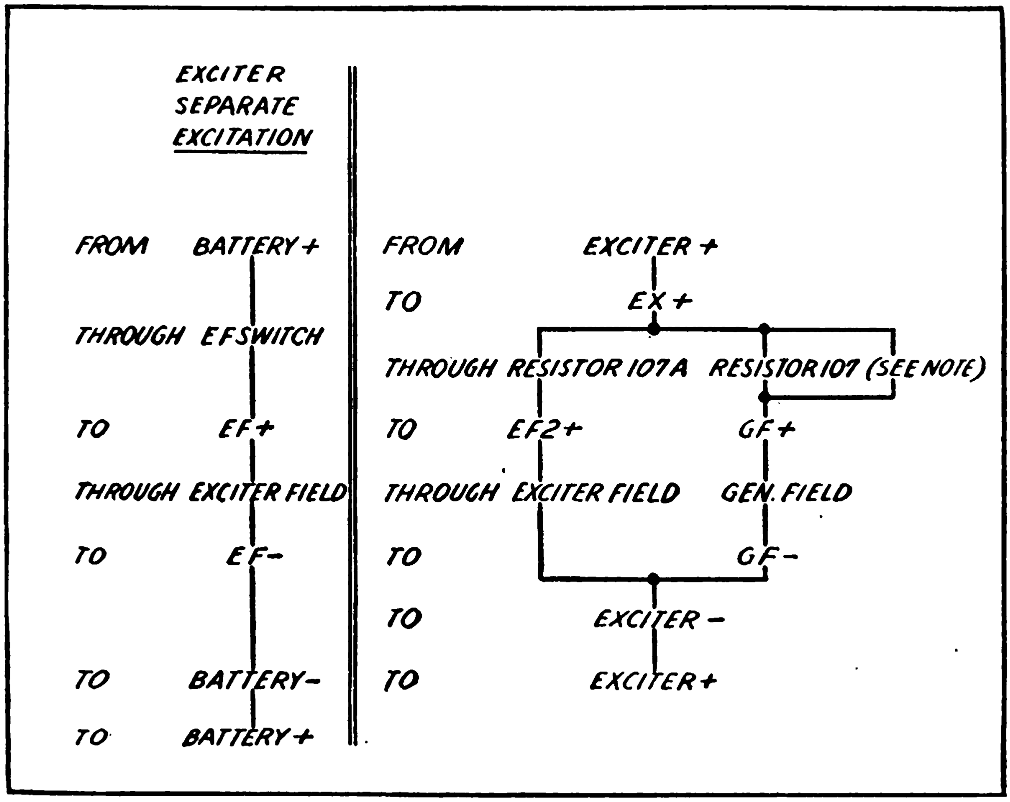

Fig. 25. Tracing Through Exciter Circuits

Note: When engine idles, "GF" switch is open. When engine develops propulsion power, GW switch closes and short-circuits resistor *107.*

The control circuits are somewhat more difficult to follow through because there are so many more of them. The prime purpose of control circuits, of course, is merely to cause the contactors in the main power circuits, Fig. 22, to close or open at the proper time, to move the reverser to the position which gives the desired direction of train movement, to control the engine speed, and to insure that the circuits cannot be improperly set up. Referring to the control circuit schematic, Fig. 27, the first step is to identify each piece of apparatus shown and to determine how it functions.

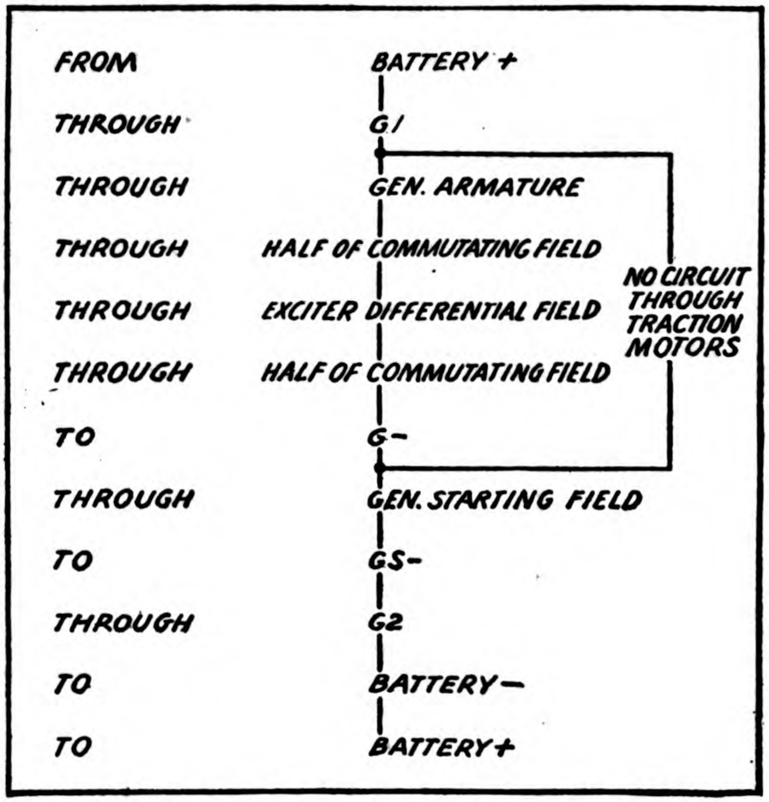

Fig. 26. Tracing Through Starting Circuits

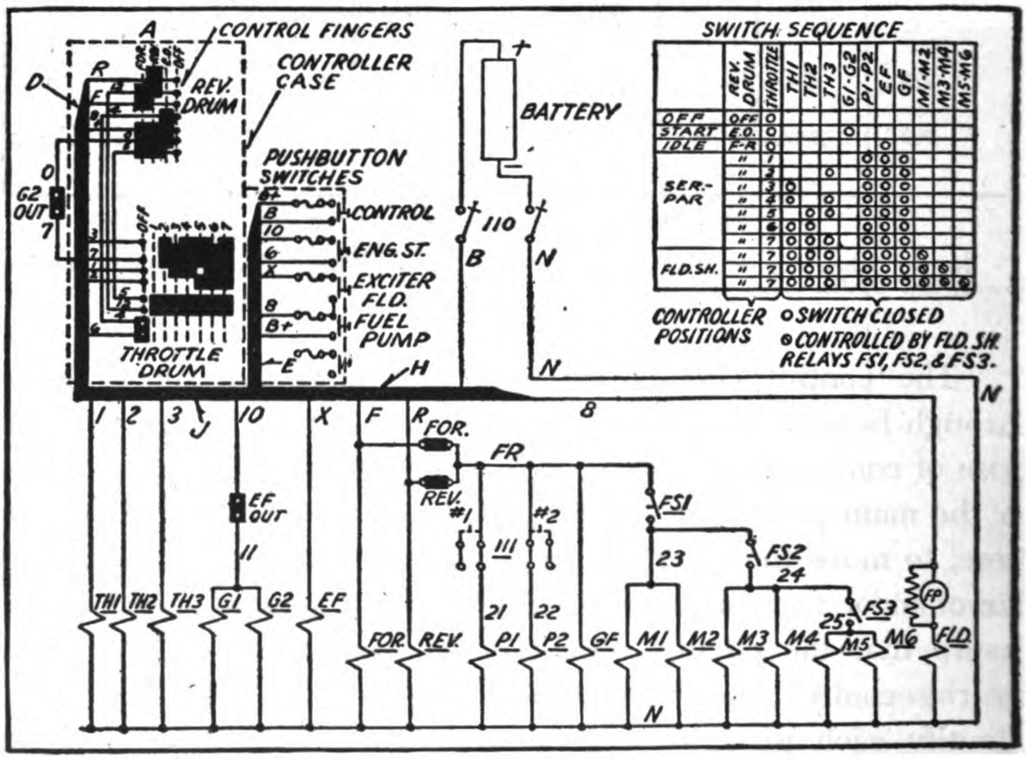

SWITCH SEQUENCE

	REV. DRUM	THROTTLE	TH1	TH2	TH3	G1-G2	P1-P2	EF	GF	M1-M2	M3-M4	M5-M6
OFF	OFF	0										
START	E.O.	0				○						
IDLE	F-R	0						○				
SER.-PAR	"	1					○	○	○			
	"	2			○		○	○	○			
	"	3	○				○	○	○			
	"	4	○		○		○	○	○			
	"	5		○	○		○	○	○			
	"	6	○	○			○	○	○			
	"	7	○	○	○		○	○	○			
FLD.SH.	"	7	○	○	○		○	○	○	⊙		
	"	7	○	○	○		○	○	○	⊙	⊙	
	"	7	○	○	○		○	○	○	⊙	⊙	⊙

CONTROLLER POSITIONS

○ SWITCH CLOSED

⊙ CONTROLLED BY FLD. SH. RELAYS FS1, FS2, & FS3.

Fig. 27. Control Schematic Diagrams

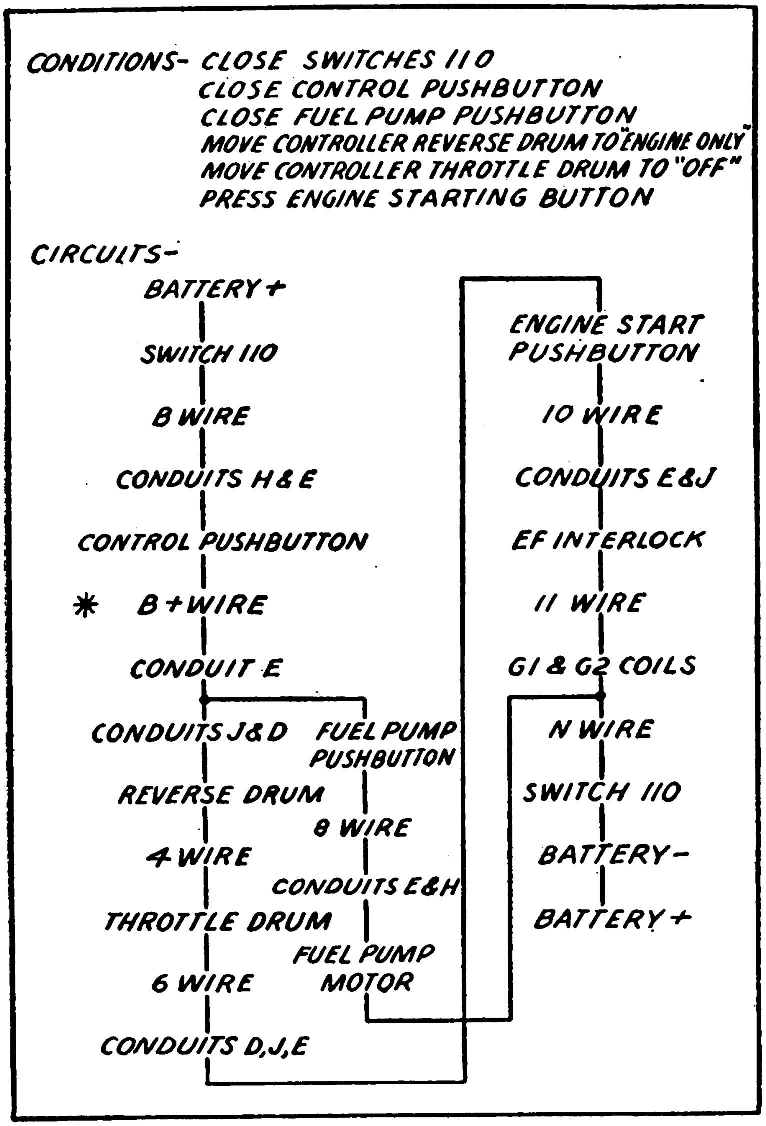

Fig. 28. Tracing Through Starting Control

Thus:

A	Cylindrical drums carrying contact plates. Turning the drums moves the contact plates under the control fingers to make electrical contact.
EO	"Engine Only" position of the reverse drum.
Shaded areas	The contact plates of the drums.
Heavy Black lines	Conduit carrying many wires.
G2 OUT	Interlock—makes circuit when G2 contactor (see Fig. 22) is open (out).
EF OUT	Interlock.
FOR (REV)	Interlocks making circuit when the reverser is in the forward (or reverse) positions.

*Control operations of Figs. 29 and 30 obtain power from here. (See Fig. 28.)

110	Knife switches for isolating the battery.
111	Knife switches for cutting out traction motors (prevent them from operating).
FS1, FS2, FS3	Contacts made by relays. FS1 closes at 600 volts across the generator, FS2 at 625 volts, and FS3 at 650 volts.
Coils TH1, TH2, TH3	The three coils moving the throttle operator. Various combinations give different lengths of throttle operator movement.
G1, G2, EF, P1, P2, GF, M1, M2, M3, M4, M5, M6	Operating coils of their respective contactors (See Fig. 22).
FP	Fuel pump motor.
FOR REV Coils	Coils to move the reverser to its corresponding position.

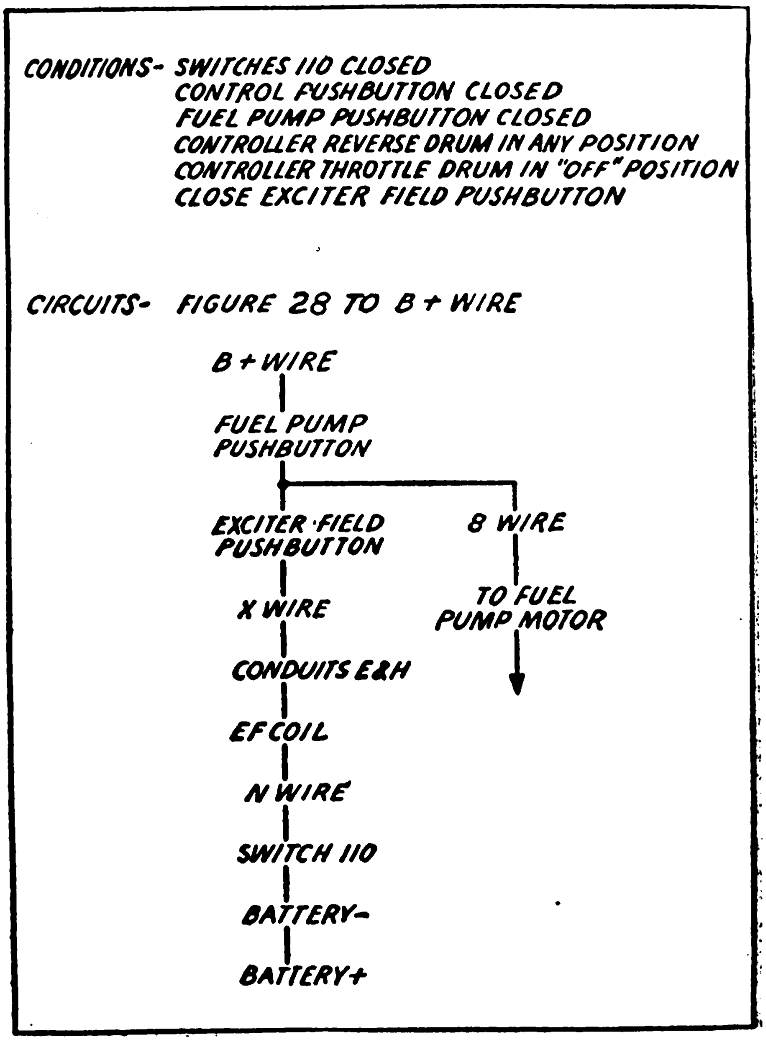

Fig. 29. Tracing Through Idling Circuits

Note that the ENG ST (Engine Starting) push button has a spring under it to return it to the open position when the pressure is released. In upper right-hand corner of diagram, Fig. 27, is a table which shows which devices are operated for each condition of operation.

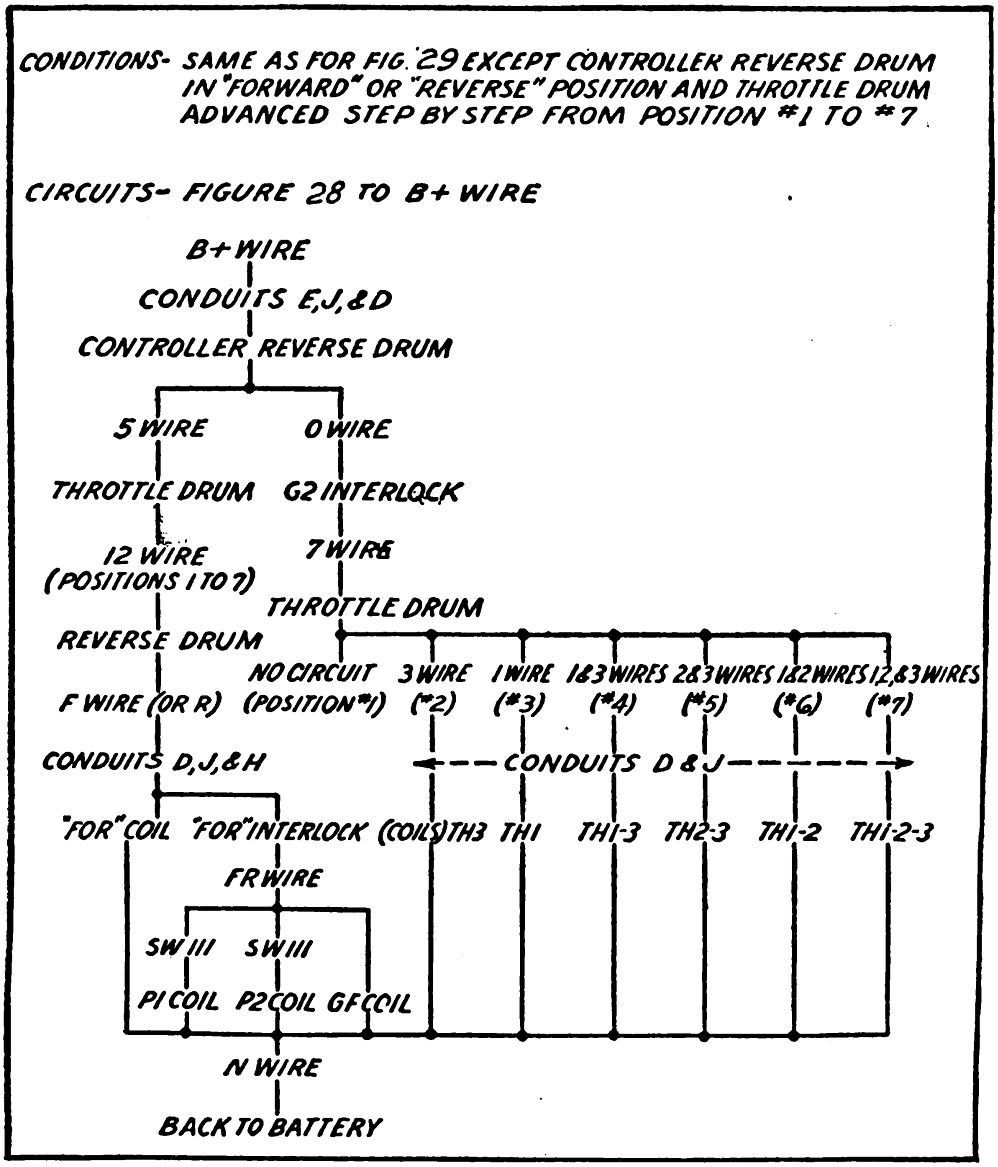

Fig. 30. Tracing Through Power-On Circuits

Fig. 28 follows the engine starting procedure through. Fig. 29 outlines the circuits for normal idle position. Throttle drum positions No. 1 to No. 7 are all the same except that different coils of the throttle operator are energized to give the progressive advancement of the engine throttle (setting of the engine governor). The circuits for each position of the controller throttle drum are shown by Fig. 30.

When the voltage of the main generator reaches 600 volts, the FS1 relay closes (Fig. 22 shows three coils connected to be energized by the voltage of the main generator) and establishes a circuit from the FR wire (Fig. 27) to 23 wire, thereby energizing coils M1 and M2. Likewise, FS2 relay and FS3 relay bring in additional traction motor field shunting switches, M3, M4, M5, and M6 in two progressive steps as the generator voltage rises.

Figs. 22 to 30 illustrate the method of tracing out the circuits for the purpose of determining which of the relays, coils, and apparatus are energized or operated under the different control conditions. It is always necessary to consult the main circuit schematic diagram (such as Fig. 22) in following through the control circuit schematic (such as Fig. 27) in order to see what happens to the power delivery each time the coil of a switch is energized or a relay is operated.

There are, of course, many types of diagrams. This discussion has covered one of the simplest systems of electrical control in use for the larger sizes of switching locomotives. The fundamental idea, however, is the same for all diagrams, and with the exercise of patience, any circuit may be understood by knowing the symbols used and also the purpose and functioning of each piece of apparatus.

SYMBOLS

To permit of ready interpretation of diagrams as used with Diesel Electric motive power, drawings of the diagram symbols commonly used are included here. There are, from time to time, slight deviations from these, but familiarity with the normal usage will clarify practically any diagram.

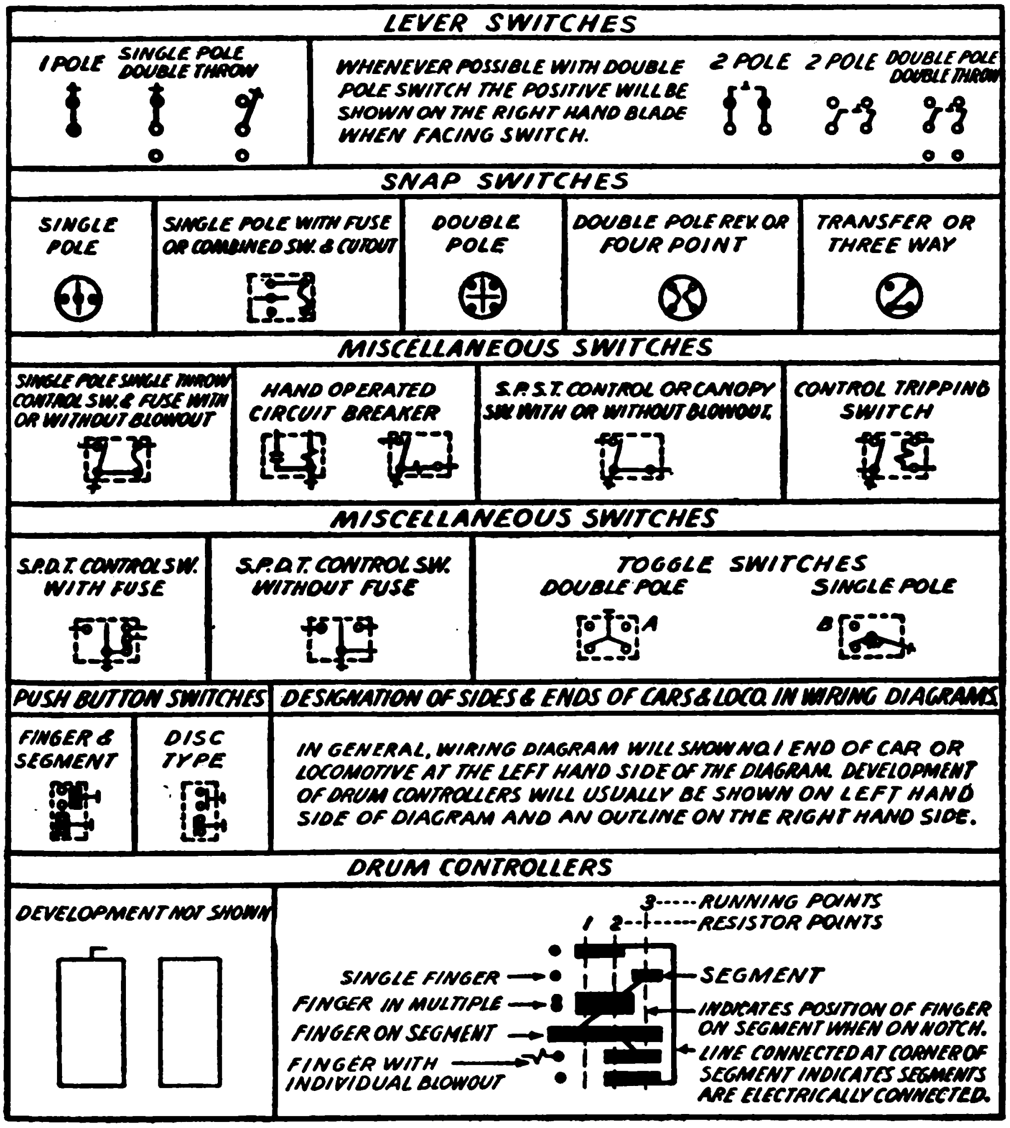

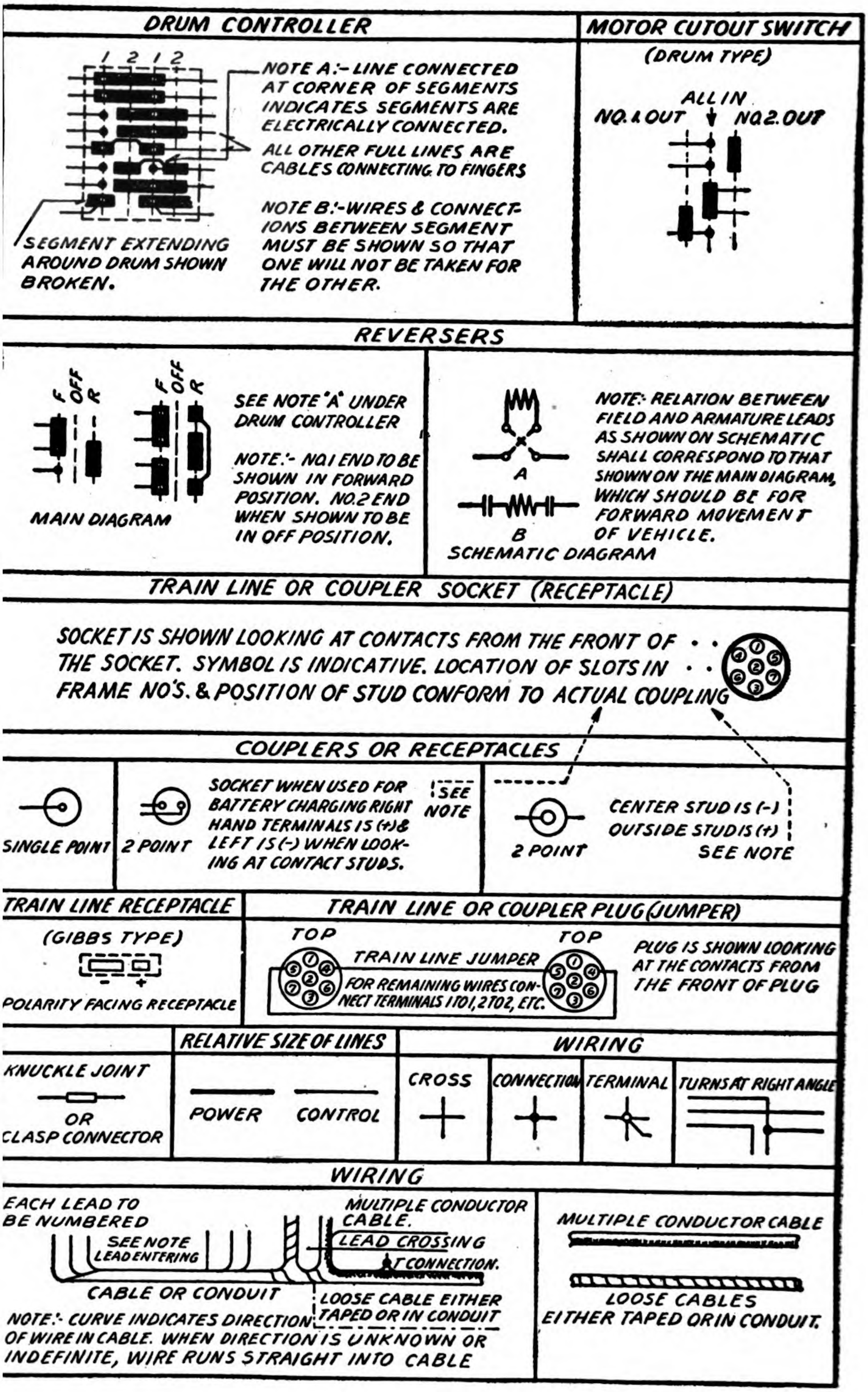

DRUM CONTROLLER

NOTE A:- LINE CONNECTED AT CORNER OF SEGMENTS INDICATES SEGMENTS ARE ELECTRICALLY CONNECTED. ALL OTHER FULL LINES ARE CABLES CONNECTING TO FINGERS

NOTE B:- WIRES & CONNECTIONS BETWEEN SEGMENT MUST BE SHOWN SO THAT ONE WILL NOT BE TAKEN FOR THE OTHER.

SEGMENT EXTENDING AROUND DRUM SHOWN BROKEN.

MOTOR CUTOUT SWITCH (DRUM TYPE)

REVERSERS

SEE NOTE "A" UNDER DRUM CONTROLLER

NOTE:- NO.1 END TO BE SHOWN IN FORWARD POSITION. NO.2 END WHEN SHOWN TO BE IN OFF POSITION.

NOTE:- RELATION BETWEEN FIELD AND ARMATURE LEADS AS SHOWN ON SCHEMATIC SHALL CORRESPOND TO THAT SHOWN ON THE MAIN DIAGRAM, WHICH SHOULD BE FOR FORWARD MOVEMENT OF VEHICLE.

TRAIN LINE OR COUPLER SOCKET (RECEPTACLE)

SOCKET IS SHOWN LOOKING AT CONTACTS FROM THE FRONT OF THE SOCKET. SYMBOL IS INDICATIVE. LOCATION OF SLOTS IN FRAME NO'S. & POSITION OF STUD CONFORM TO ACTUAL COUPLING

COUPLERS OR RECEPTACLES

SOCKET WHEN USED FOR BATTERY CHARGING RIGHT HAND TERMINALS IS (+) & LEFT IS (-) WHEN LOOKING AT CONTACT STUDS.

CENTER STUD IS (-) OUTSIDE STUD IS (+) SEE NOTE

TRAIN LINE RECEPTACLE (GIBBS TYPE)

POLARITY FACING RECEPTACLE

TRAIN LINE OR COUPLER PLUG (JUMPER)

FOR REMAINING WIRES CONNECT TERMINALS 1 TO 1, 2 TO 2, ETC.

PLUG IS SHOWN LOOKING AT THE CONTACTS FROM THE FRONT OF PLUG

KNUCKLE JOINT OR CLASP CONNECTOR

RELATIVE SIZE OF LINES

WIRING

WIRING

EACH LEAD TO BE NUMBERED

NOTE:- CURVE INDICATES DIRECTION OF WIRE IN CABLE. WHEN DIRECTION IS UNKNOWN OR INDEFINITE, WIRE RUNS STRAIGHT INTO CABLE

LOOSE CABLE EITHER TAPED OR IN CONDUIT

LOOSE CABLES EITHER TAPED OR IN CONDUIT.

GROUND

WIRING SYMBOLS INDICATING CABLE SIZES ON WIRING DIAGRAMS

(I) WITH SUB LETTER AS (IA) (IB) FOR CONTROL EITHER SINGLE WIRES OR TRAIN LINES.
(II) WITH SUB LETTERS AS (IIA) (IIB) FOR AUXILIARY CIRCUITS SUCH AS LIGHTING, COMPRESSOR, ETC.
(III) MOTOR CIRCUIT BUS LINE.
(IV) FOR THIRD RAIL SHOE.
(V) WITH SUB LETTERS (VA) (VB) FOR TROLLEY LEADS.
(VI) WITH SUB LETTERS (VIA) (VIB) FOR MOTOR LEADS.
(IX) WITH SUB LETTERS (IXA) (IXB) FOR BUS BARS.
(X) RESISTOR WITH SUB LETTERS (XA) (XB) ETC.
(▲) CABLE OR CONNECTION SHOWN BUT NOT FURNISHED AS PART OF EQUIPMENT.

WIRING SYMBOLS IDENTIFYING DEVICES ON CAR WIRING DIAGRAMS

R, R1, RR, RR1 = RESISTOR CONTACTORS
S = SERIES CONTACTORS
P = PARALLEL CONTACTORS
F, FOR. = FORWARD POSITION OF REVERSER
R, REV = REVERSE POSITION OF REVERSER
N = COMMON RETURN
M = FIELD CONTACTORS
G = MAIN GENERATOR
AG = AUXILIARY GENERATOR
CG = CONTROL GENERATOR
E = EXCITER
C = COMPRESSOR
W = RADIATOR FAN MOTOR
B1 = TRACTION MOTOR BLOWER MOTOR

OV = OVERVOLTAGE RELAY
VR = VOLTAGE REGULATOR
G = GROUND, ALSO STARTING CONTACTORS
GP = PARALLEL TIE CONTACTOR
RC = REVERSE CURRENT
AF = AUXILIARY FIELD CONTACTOR
GF = GENERATOR FIELD CONTACTOR
TR = TRANSITION RELAY
TH = THROTTLE DEVICE COIL
A = AUXILIARY CIRCUIT CONTACTOR
LA = LOAD AMMETER
BA = BATTERY AMMETER
FS = FIELD SHUNT RELAY

WIRING

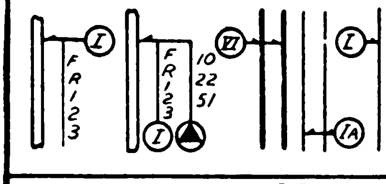

ROMAN NUMERALS IN CIRCLES INDICATE SIZE, STRANDING & INSULATION. LETTERS & NUMERALS INDICATE CABLE & WIRE NUMBERS.

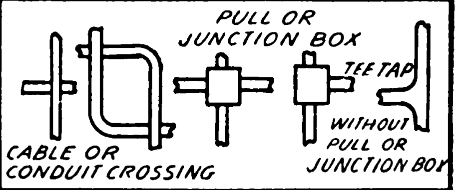

COILS

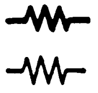

SUCH AS MOTOR FIELDS, INDUCTIVE SHUNTS REACTORS, SOLENOIDS AND BLOWOUTS.

NOTE:- RELATIVE SIZE OF LINE MAKING UP THE SYMBOL SHOULD CORRESPOND TO THE CIRCUIT IT IS IN

ARMATURES

MOTOR NO. TO BE PLACED IN CIRCLE

WITH COMMUTATING FIELD

COMPRESSOR

MOTOR GENERATOR

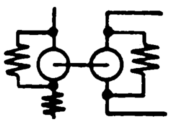

EXACT DETAIL CONNECTION TO BE IN ACCORD WITH MACHINE.

INCANDESCENT LAMP

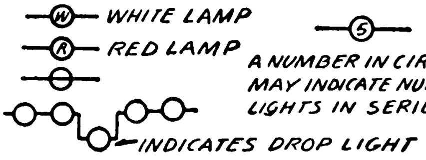

A NUMBER IN CIRCLE MAY INDICATE NUMBER LIGHTS IN SERIES

HEADLIGHT

CAPACITOR

(CONDENSER)

SHUNT FOR AMMETER

LIGHTNING ARRESTER

CONNECTION BOX

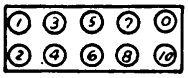

FUSES

FUSE

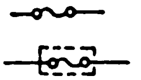

FUSE WITH BOX

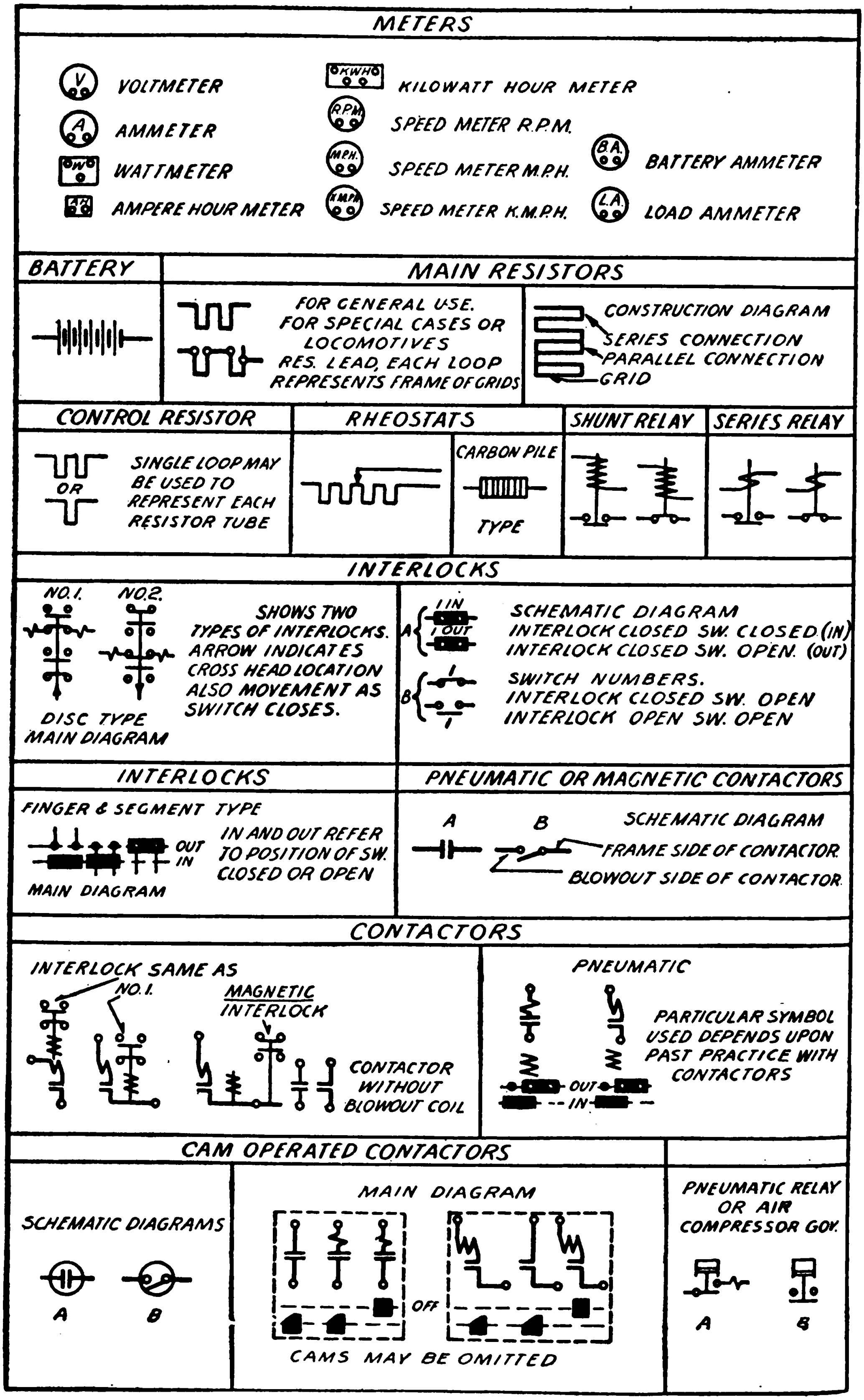
METERS
V
VOLTMETER
A
AMMETER
WM
WATTMETER
AMPERE HOUR METER
KWHM
KILOWATT HOUR METER
R.P.M.
SPEED METER R.P.M.
M.P.H.
SPEED METER M.P.H.
K.M.P.H.
SPEED METER K.M.P.H.
B.A.
BATTERY AMMETER
L.A.
LOAD AMMETER
BATTERY
MAIN RESISTORS
FOR GENERAL USE.
FOR SPECIAL CASES OR LOCOMOTIVES
RES. LEAD, EACH LOOP REPRESENTS FRAME OF GRIDS
CONSTRUCTION DIAGRAM
SERIES CONNECTION
PARALLEL CONNECTION
GRID
CONTROL RESISTOR
OR
SINGLE LOOP MAY BE USED TO REPRESENT EACH RESISTOR TUBE
RHEOSTATS
CARBON PILE
TYPE
SHUNT RELAY
SERIES RELAY
INTERLOCKS
NO.1.
NO.2.
DISC TYPE
MAIN DIAGRAM
SHOWS TWO TYPES OF INTERLOCKS. ARROW INDICATES CROSS HEAD LOCATION ALSO MOVEMENT AS SWITCH CLOSES.
A
1 IN
1 OUT
SCHEMATIC DIAGRAM
INTERLOCK CLOSED SW. CLOSED (IN)
INTERLOCK CLOSED SW. OPEN. (OUT)
B
1
1
SWITCH NUMBERS.
INTERLOCK CLOSED SW. OPEN
INTERLOCK OPEN SW. OPEN
INTERLOCKS
FINGER & SEGMENT TYPE
OUT
IN
MAIN DIAGRAM
IN AND OUT REFER TO POSITION OF SW. CLOSED OR OPEN
PNEUMATIC OR MAGNETIC CONTACTORS
A
B
SCHEMATIC DIAGRAM
FRAME SIDE OF CONTACTOR
BLOWOUT SIDE OF CONTACTOR
CONTACTORS
INTERLOCK SAME AS NO.1.
MAGNETIC INTERLOCK
CONTACTOR WITHOUT BLOWOUT COIL
PNEUMATIC
OUT
IN
PARTICULAR SYMBOL USED DEPENDS UPON PAST PRACTICE WITH CONTACTORS
CAM OPERATED CONTACTORS
SCHEMATIC DIAGRAMS
A
B
MAIN DIAGRAM
OFF
CAMS MAY BE OMITTED
PNEUMATIC RELAY OR AIR COMPRESSOR GOV.
A
B

LEAD	MARKING
ARMATURE (CONNECTED TO BRUSH HOLDER)	A
ARMATURE (CONNECTED TO BRUSH HOLDER OR TO COMMUTATING FIELD)	AA
MAIN FIELD	F AND FF
FIRST FIELD CONTROL LEAD	M
SECOND FIELD CONTROL LEAD	MM
WHEN THE COMMUTATING FIELD WINDINGS ARE NOT PERMANENTLY CONNECTED TO THE ARMATURE, THE EXTERNAL LEADS WILL BE MARKED:- COMMUTATING FIELD	C AND CC

WITH CURRENT PASSING THROUGH THE MOTORS AS INDICATED BY ARROWS THE ARMATURE ROTATION WILL BE

CLOCKWISE WITH MARKING

COUNTER-CLOCKWISE WITH MARKING

FIELD CONTROL MOTOR ARMATURE WILL ROTATE

CLOCKWISE WITH MARKING

COUNTER CLOCKWISE WITH MARKING

NOTE # DIRECTION OF ROTATION IS SHOWN BY ARROW. MOTOR IS VIEWED FROM COMMUTATOR END.

THE SECTION OF FIELD WINDING IN CIRCUIT TO GIVE VARIOUS FIELD STRENGTHS ARE:-

USUAL FIELD CONTROL MOTORS

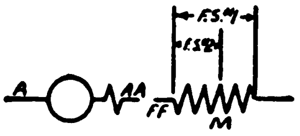

WHERE MORE THAN TWO FIELD STRENGTH

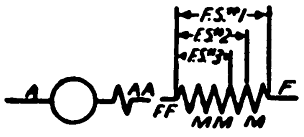

MAIN WIRING DIAGRAM WILL SHOW MARKINGS AS FOLLOWS:-

FOR NON-FIELD CONTROL MOTORS.

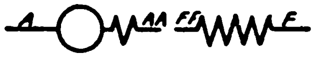

FOR FIELD CONTROL MOTORS

WHERE SEPARATE COMMUTATING FIELD WINDINGS ARE USED

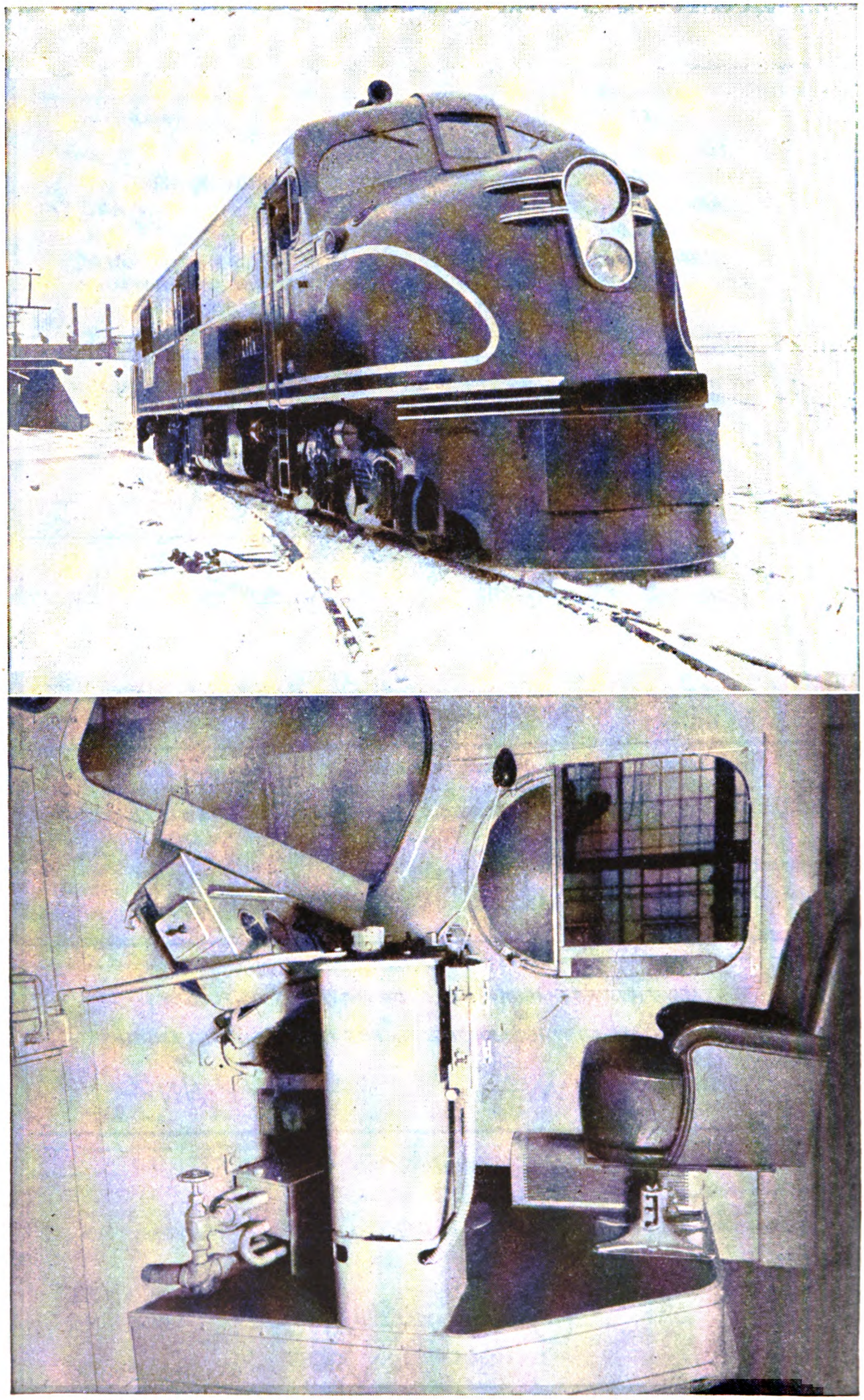

Diesel Locomotive and Interior of Engineer's Cab

Chapter 7

Diesel Engine Cycles

Before entering into a detailed discussion of engine parts and accessories, and their adjustment, it is well first to restate a few theoretical considerations which are the basis of Diesel design and functioning. The word "cycle" enters into almost every discussion of Diesel and other internal-combustion engines. A cycle may be defined as a series of events through which a machine or object must pass to attain a definite end. In an internal-combustion engine, a cycle entails (1) introduction of a fuel and air charge; (2) combustion; (3) expansion; and (4) ejection of the burnt gases.

FOUR-STROKE CYCLE. If an engine requires four strokes of the piston to complete the cycle, it is termed a four-stroke cycle engine. Usually the word "stroke" is omitted, the term becoming "four-cycle."

The events occurring in a four-cycle gasoline engine, such as is found in any automobile, are shown diagrammatically in the four sketches A to D inclusive of Fig. 1.

These sketches illustrate the action in the engine but, of course, in an actual engine the various parts may be located differently. As will be seen, the cylinder *G* has a head which carries two valves, the intake valve *A* and the exhaust valve *E*. Each of these valves may be moved up and down by systems of rocker arms, pushrods, and cams. The cams are mounted on camshafts which are geared to the crankshaft so that the camshaft makes one complete revolution while the crankshaft *C* is making two revolutions. The cylinder head also is equipped with a spark plug. Those who are familiar with automobile engines know that an electric spark appears at the inner end of the spark plug when an electric circuit is closed by a distributor or other make-and-break device.

It will be seen that the cam upon which the valve pushrod rests is of irregular shape; it has a low section and a high section. When the cam rotates, the pushrod rests most of the time on the low, or small diameter, part of the cam. Finally, the high portion of the cam moves under the pushrod base, and this lifts the pushrod, which in turn, pushes up on the outer end of the valve rocker arm. And since the inner end of the rocker moves downward, the valve is moved downward into an open position. The valve *A* in Fig. 1A is open while valve *E* is closed. If the reader will follow the cam position shown in the four drawings, he will see how the valve action occurs. The events occurring in a four-cycle gasoline engine are as follows:

Suction Stroke. (Fig. 1A) As shown in Fig. 1A, the piston is moving downward and this increase in space between the piston top and cylinder head, creates a slight vacuum, or a pressure below the pressure of the atmosphere, in the cylinder. This decrease in pressure causes gasoline flowing through pipe *b* from the fuel tank to the carburetor *e* to pass through a jet into the narrow throat of the air intake manifold *d*. The mixture of gasoline (which evaporates into a vapor) and air enters the cylinder through the intake, or admission valve, *A*. This flow of gas and air continues as long as the piston moves downward until, finally, the crank *c* reaches bottom dead center and starts to push the piston up, as shown in Fig. 1B.

It will be observed that when the piston starts back up, the inlet valve *A* has been closed by the rotation of the right-hand cam. The cylinder is now sealed by the closed valves, and is entirely filled with a mixture of gasoline vapor and air.

Compression Stroke. (Fig. 1B) As shown in this sketch, the piston is being forced upward toward the cylinder head by the rotation of the crank *c*. This forces the gas-air mixture, trapped in the cylinder, into a decreasing space, and, as a result, the pressure of this mixture is raised to about 90 pounds (up to 120 pounds in a high-speed, high-compression automobile engine).

Just before the piston reaches the end of its up stroke, that is, top dead center, an electric circuit, which is not shown in the sketches, is closed and a spark is made at the inner end of the spark plug. The gas-air mixture is exploded by this spark and while the piston moves to the position shown in Fig. 1C, the mixture burns. This creates a high pressure in the cylinder, from 300 to 400 pounds per square inch, and the temperature rises to about 2400°F. This combustion takes place at the moment the crank passes dead center and the piston starts in its next stroke. Since the piston is practically motionless when the explosion occurs, that is, the volume occupied by the gases does not change during combustion, it is said that combustion is at *constant volume*, or it is *constant-volume* combustion. In all gas and gasoline engines, constant-volume combustion is assumed to occur; actually

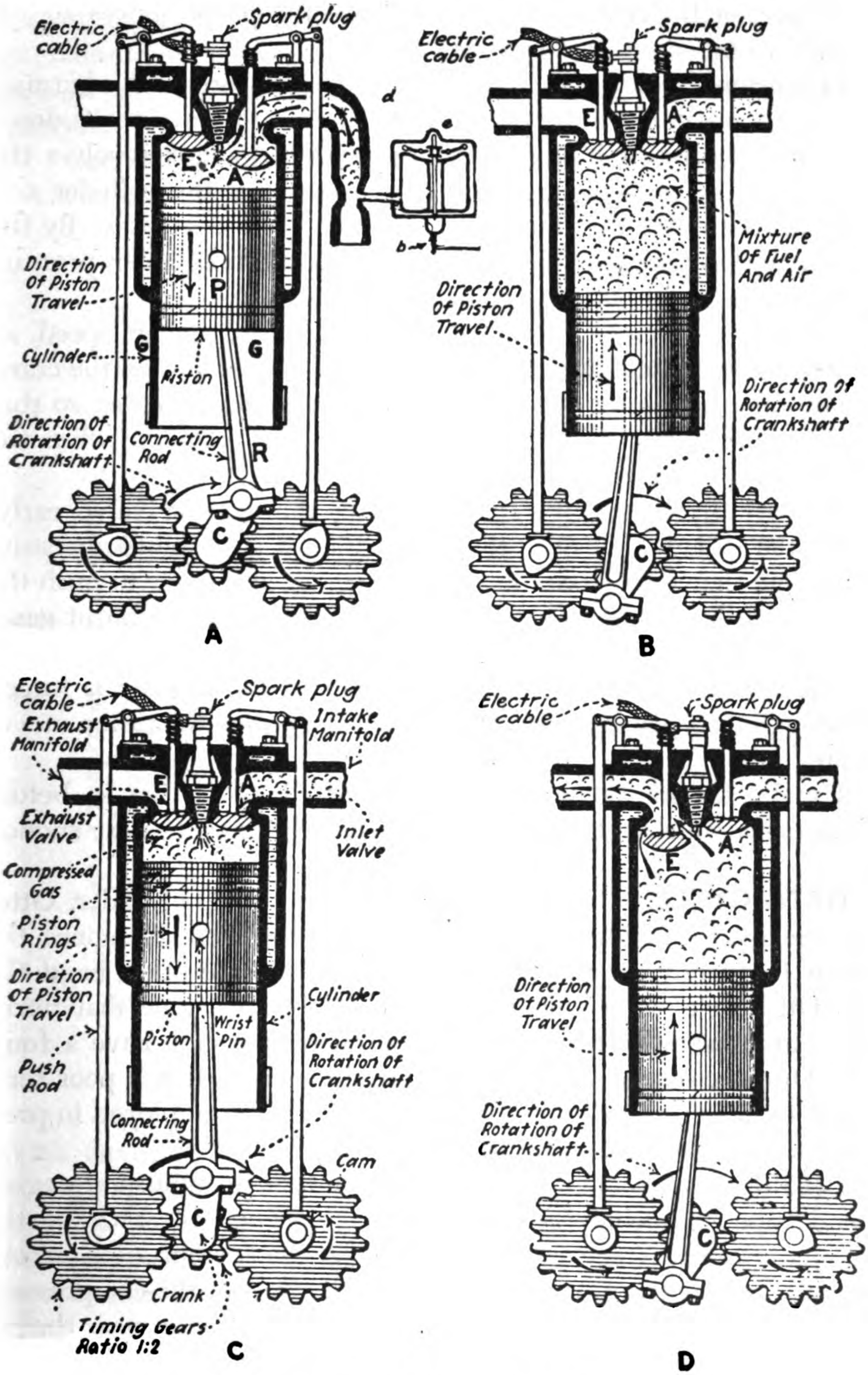

Fig. 1. Diagrams Showing Action of a Gasoline Engine

the burning of the fuel may continue while the piston moves an appreciable distance on its down stroke.

Expansion Stroke. (Fig. 1C) The high pressure of the burning gases exerts pressure on the piston and causes it to move on its down stroke, and by means of the connecting rod and crank revolves the crankshaft. The movement of the piston increases the cylinder volume, with the result that the pressure of the gases decreases. By the time the piston reaches the end of its stroke, the cylinder pressure may be down to 30 pounds per square inch.

In order to remove the burnt gases promptly, in high-speed, or even in slow-speed engines, the exhaust valve *E* opens when the crank is at an angle of almost 60 degrees with bottom dead center, so that the piston has almost 25 per cent of its stroke to complete when the exhaust valve opens.

Exhaust Stroke. (Fig. 1D) Opening the exhaust valve early, permits the cylinder pressure to drop to almost atmospheric pressure by the time the crank passes lower dead center and starts to push the piston upwards. In this way, over one-half the weight of burnt gases is removed before the exhaust stroke begins.

The remainder of the cylinder contents of burnt gases is forced out through the open exhaust valve during the period the piston moves upward.

Usually the intake or suction valve opens early, that is, before the piston completes its exhaust stroke and begins the next suction stroke.

OTTO CYCLE. By reason of the German engine builder, Otto, being the first to employ this cycle of events in commercial engines, the cycle is frequently termed the "Otto cycle." On the other hand the term "Otto cycle" is also employed to indicate an engine that burns its fuel at constant volume, which then means we may have a four-stroke Otto-cycle or a two-stroke Otto-cycle engine. It is a poor term and the term *constant-volume combustion* should be employed in preference to words easily misunderstood.

DIESEL CYCLE. The efficiency of an internal-combustion engine depends upon the compression ratio, that is, upon the ratio of the maximum pressure reached by the end of the compression stroke divided by the pressure in the cylinder at the start of the compression stroke. The pressure at the start of the stroke must be as near that of the outside air as possible, in order to put the maximum amount of air-fuel mixture into the cylinder. Due to wire-drawing through the valves, the cylinder pressure is always less than atmospheric, but this is undesirable as stated. It follows then that the only way to obtain a high efficiency from the engine is to raise the final compression pressure.

Originally, up to 1890, it was impossible to employ a final compression pressure of over 60 pounds in any internal-combustion engine.

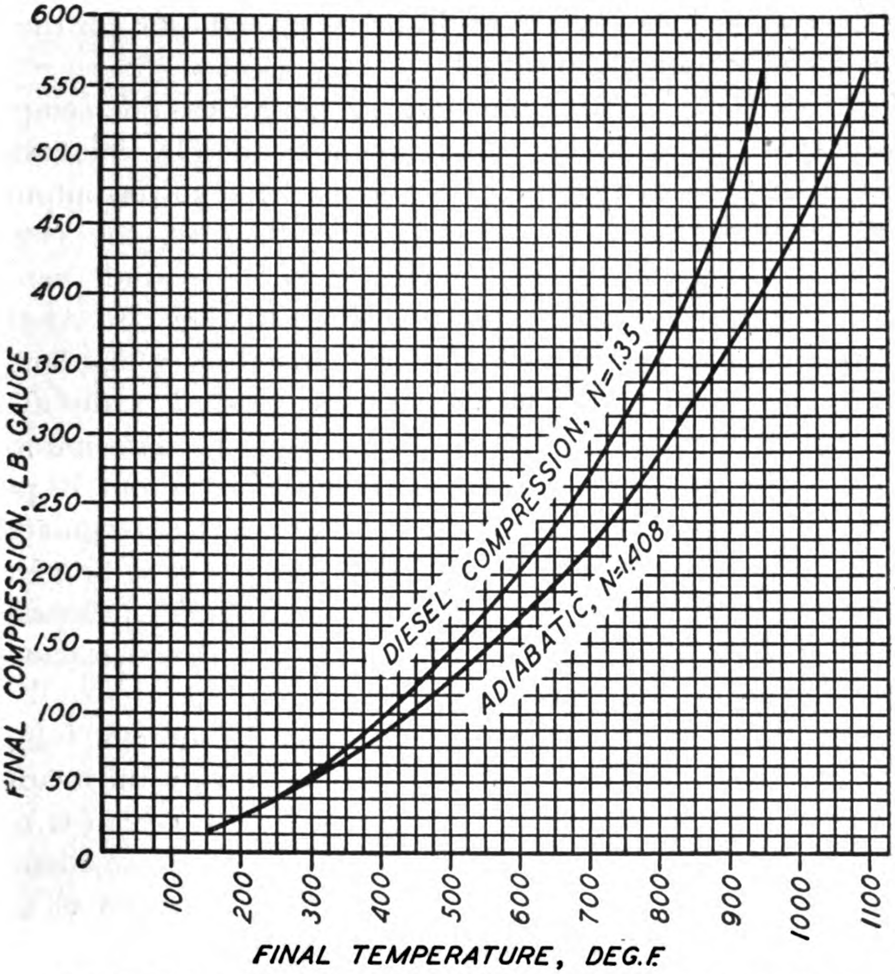

Fig. 2. Relation of Temperature and Pressures During Compression

With anything higher, the fuel then used, benzine, coal gas, etc., would pre-ignite, due to the higher temperatures arising during compression. In Fig. 2 is a chart showing the temperatures resulting from compression to various final pressures. Another cause of pre-ignition, save at low compression pressures, was the design of the engines of those days. Cooling was poor so that there was always some hot spot to ignite the mixture as soon as the mixture had reached even a low temperature.

In later years better engine design and better fuels have enabled the engineer to raise gasoline engine pressures to 90-120 and even 150 pounds per square inch.

In the 1890's, however, the permissible compression pressure of 60 pounds led many to try various means of improving engine performance. Dr. Rudolf Diesel proposed to compress pure air only in the engine cylinder and inject the fuel when the end of the compression stroke was reached. There could be no pre-ignition for the reason that only air was being compressed.

This absence of pre-ignition danger permitted the compression pressure to be raised to any final pressure, thereby increasing the efficiency, which means less fuel for a given horsepower output.

Without going into Dr. Diesel's first theories, the engine he finally evolved compressed the air charge to 500 pounds per square inch. The air reached a temperature of about 900° F. At the end of the compression stroke, fuel was introduced as a fine spray into this hot air, ignition occurred automatically, for practically all heavy fuel oils ignite at temperatures of around 680° F. The introduction of the oil continued while the piston moved along about 10 per cent of its power stroke; the rate of oil injection was so regulated that there was no pressure rise in the cylinder; the heat resulting from the combustion was just sufficient to hold up the cylinder pressure while the gases expanded behind the piston. Expansion and exhaust were identical with that of the typical gas engine.

In Fig. 3 are four sketches which show in simplified form the action in a four-cycle Diesel. It will be noticed by the reader that these sketches are quite similar to those of Fig. 1, which is not surprising because the gasoline engine and the Diesel are identical in everything, except that in the gasoline engine a mixture of gasoline vapor and air is compressed and ignited by a spark; in the Diesel only air is compressed, and the fuel is forced into the cylinder at the end of compression, and is ignited automatically by the high temperature of the compressed air.

The Diesel events are as follows:

Suction Stroke. (Fig. 3A) The piston moves downward, and a charge of fresh air is drawn into the cylinder through the inlet valve *A* which is held open by its cam.

Compression Stroke. (Fig. 3B) The piston reaches the bottom of its stroke and the inlet valve is closed by its spring when the high point of the cam rotates from under the pushrod. In the position,

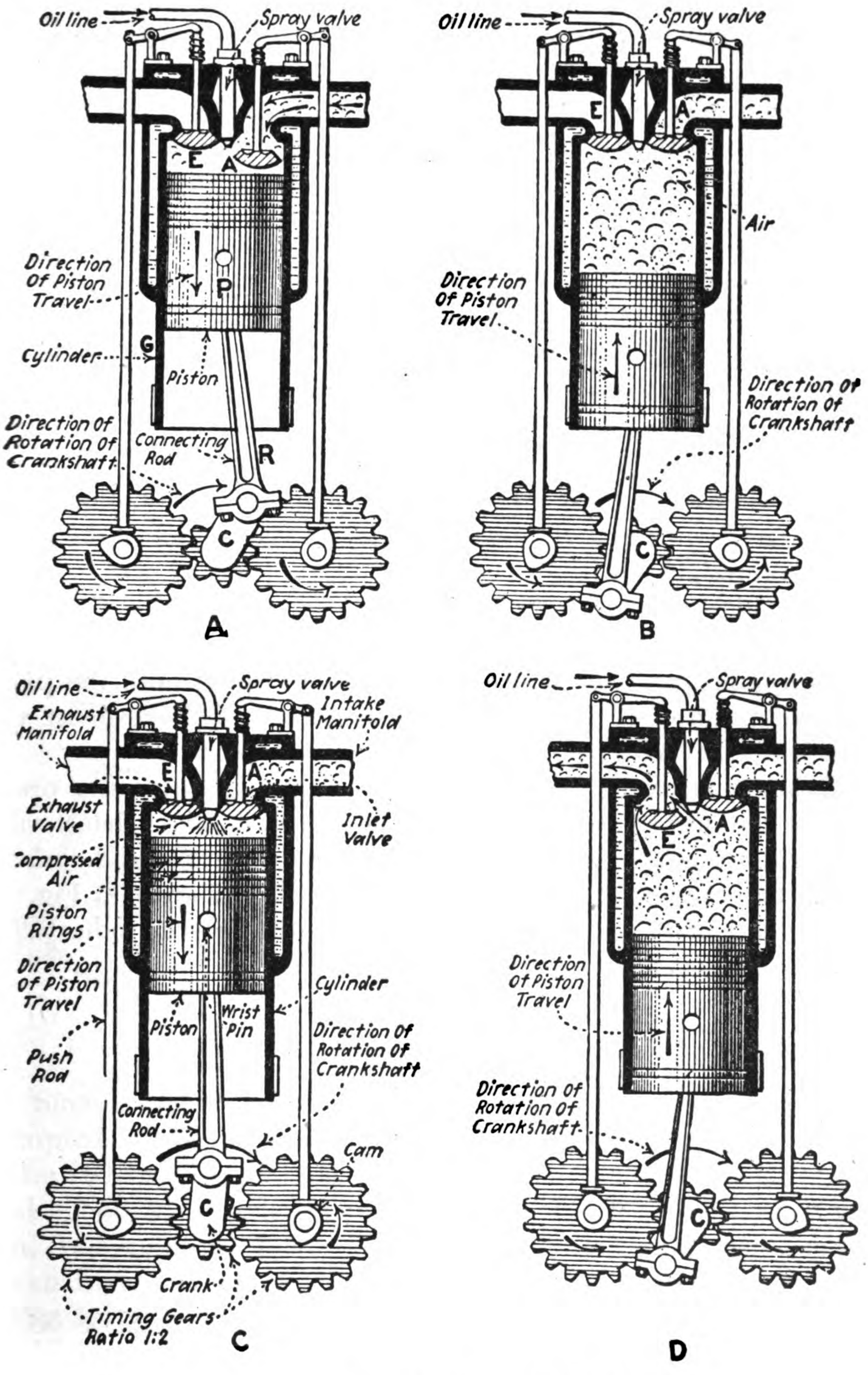

Fig. 3. Diagrams Showing Action of a Diesel Engine

shown in Fig. 3B, bottom dead center has been passed and the chank *C* is forcing the piston upward toward the cylinder head. Since both the inlet valve *A* and exhaust valve *E* are closed, the upward travel of the piston compresses the cylinder charge of air.

Finally, when the end of the compression stroke is reached, a charge of oil is injected through the spray valve, which is shown in the center of the cylinder head.

The oil ignites spontaneously as soon as it mixes with the air in the cylinder, for the piston has compressed the air to 500 pounds per square inch pressure, and this high compression raises the temperature of the air to about 900° F. Oil will ignite without a spark if heated to 680° F., so the oil spray when mixed with the heated air will start to burn without the presence of a spark.

Expansion Stroke. (Fig. 3C) As soon as the crank moves past top dead center, the pressure created by the burning of the fuel, forces the piston downward. This causes the crank to rotate, delivering power to the shaft.

The oil continues to spray into the cylinder while the piston moves a short distance on the expansion stroke.

The gases continue to exert force on the piston until the piston reaches bottom dead center. At about this time the exhaust cam opens the exhaust valve *E*.

Exhaust Stroke. (Fig. 3D) As soon as the exhaust valve opens, much of the burnt gases rush out of the cylinder. The exhaust valve continues in the open position during the next up stroke of the piston, that is, the exhaust stroke, the start of which is shown in Fig. 3D and the end of this exhaust stroke is approximately as indicated in Fig. 3A. The cycle is now repeated.

Chapter 8

Combustion Principles

In the first Diesel engine built, the oil was injected into the cylinder by a simple pressure pump. The result was poor for the reason that the pump would not deliver the oil at high enough pressure to atomize the oil when it entered the cylinder through the spray nozzle.

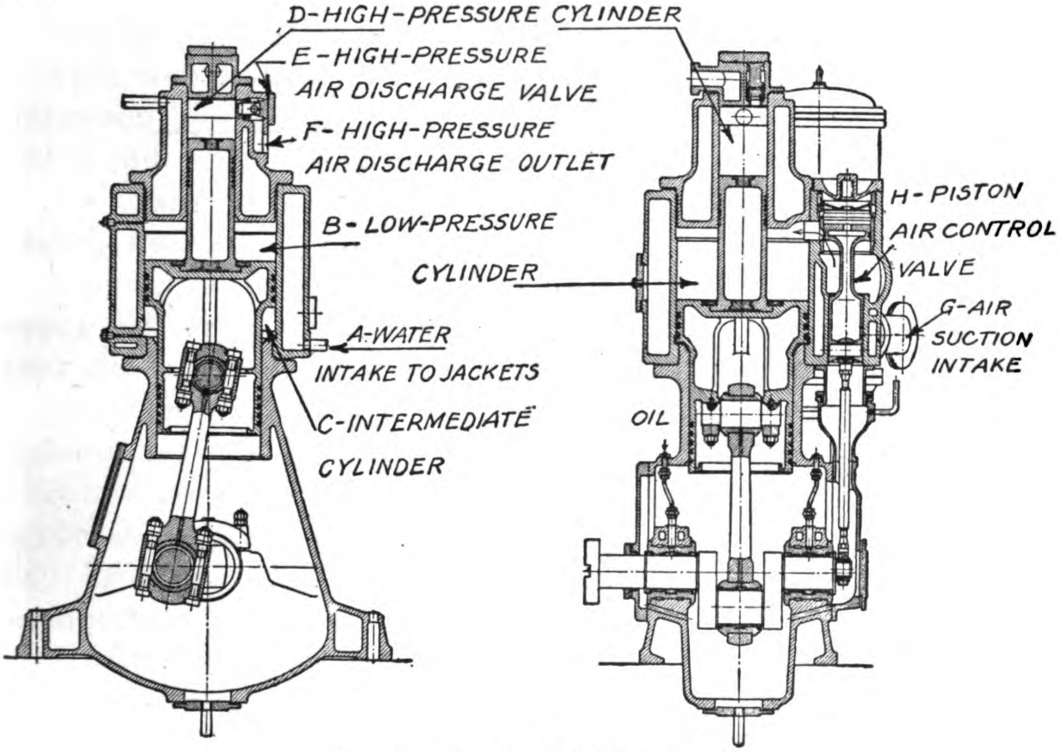

Fig. 1. Three-Stage Air Compressor

Since a pump was unsatisfactory, it was a stroke of genius that prompted Diesel to employ an air blast to spray the oil, somewhat in the fashion of a perfume atomizer. As a result, all Diesel engines until about 1914 employed an air blast. This air, at 900 pounds pressure, was supplied by a two- or three-stage compressor, usually driven from a crank at the end of the engine crankshaft, as shown in Fig. 1.

The air-injection Diesel has been superseded by the mechanical-injection or "solid-injection" Diesel. The change has been due to the high cost of the compressor, about 20 per cent of the entire engine cost, to operating difficulties with the compressor, and to the better efficiency of the solid-injection engine. The last is due to the fact that although some of the energy consumed in compressing the injection air is returned when the air entering the engine cylinder acts upon the piston of an air-injection Diesel, 50 per cent of this heat of compressor work is removed by the compressor cooling water and is lost.

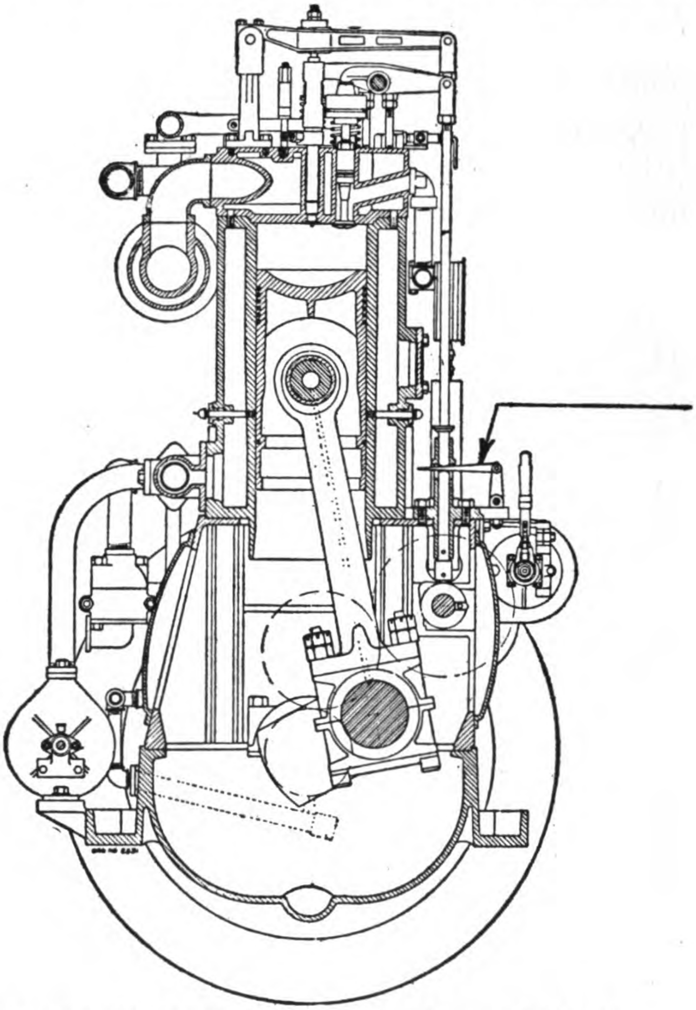

Fig. 2. Solid-Injection Diesel Using Common-Rail and Mechanically Opened Spray Valve

SOLID-INJECTION DIESELS. A better term is "mechanical-injection," but De LaVergne Engine Company employed the term "solid-injection" when introducing its "Price" Diesel in 1917, and the term gained general acceptance.

The ability of any solid-injection Diesel to operate satisfactorily depends upon two factors: (1) The fuel pumping mechanism must deliver the oil charge into the cylinder in a fine spray without any "dribbling" or leakage after the injection period is passed; and (2) The cylinder design must be such that the cylinder charge of air is brought into intimate contact with the oil spray. To achieve this latter aim the combustion chamber of slow- and medium-speed Diesels have been made of various forms.

Three general types of fuel-injection pumps are found on solid-injection Diesels. These are (1) *commonrail* pumps, see Fig. 2; (2) *impulse* pumps; and (3) *distributor* pumps.

The greatest importance in the design of a high-speed Diesel is completeness of combustion. This problem overshadows other purely mechanical details, such as lightness and strength of the framing, balancing of crankshaft, and lubrication. Without a reasonable degree of combustion efficiency, the power developed for each gallon of fuel would be low, thereby eliminating the economic advantage possessed by the theoretical Diesel cycle.

Combustion efficiency is desirable on a second ground. If the entire charge of fuel, injected into the engine cylinder, is not completely burned, the unburned portion will settle on the cylinder walls and piston, leaving a sticky mass of carbon. This carbon will fill the space between a piston ring and its groove, finally binding the ring so that the ring no longer seals the piston against blow-by. Other portions of the carbon settle on the exhaust valve seat and cause the valve to leak. This reduces compression to a point where the air temperature does not reach a high enough value during compression, to ignite the next fuel charge.

From both an efficiency and a mechanical standpoint, complete combustion is a requirement if a high-speed Diesel is to be successful.

COMBUSTION IN A DIESEL. Since air entering an engine cylinder is made up of 23.1 per cent of oxygen, by weight, and 76.9 per cent of nitrogen, it is apparent that there is roughly three times as much nitrogen as oxygen. Since nitrogen does not enter into combustion at all, its presence means that it is more difficult for the oxygen to meet the carbon and hydrogen of the fuel charge. This is a hindrance to combustion, but, on the other hand, it is an advantage, for, if there were only oxygen in the cylinder, the temperature of combustion would be so high as to destroy the cylinder.

When a charge of fuel oil is injected into an engine cylinder, there are several steps in the combustion of the fuel and air.

ATOMIZATION. The first step is to divide the oil charge into as many fine particles as possible. The reason for this is that the oxygen in the air contacts only with those carbon and hydrogen atoms that are on the surface of an oil particle. The oxygen cannot penetrate into the interior of an oil drop. To give the greatest surface, the oil must be divided into the greatest number of fine particles.

If the spray-valve nozzle is properly designed, the oil is divided into particles which may be separated into the following groups:

OIL PARTICLES

Particle Diameters..............in.	0.0005	0.001	0.002	0.003	0.004	0.005
Per Cent of Oil Particles with Diameter equal to column heading....	50%	25%	7½%	3%	2%	1%

To obtain this fineness, which is equal to or better than the atomizations obtainable with a perfume atomizer, the spray valve must be properly designed. There must be a proper correlation between the oil pressure and the diameter of the orifice.

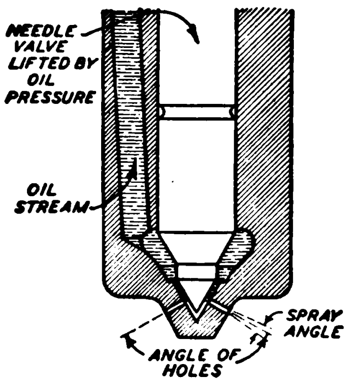

Fig. 3. Spray Valve with Several Orifices to Give a Widely Diffused Spray

Even if the oil particles be properly broken up, there is a second requirement: the oil particles must be completely diffused through the air charge. This may be accomplished either by a nozzle that spreads the oil in a wide cone or by some arrangement whereby the air is diffused through the oil charge.

For diffusion of the oil charge, the usual spray valve is supplied with several openings in the tip. The oil issues through the several holes and forms an equal number of cones of atomized oil which effectually fill the combustion space of the engine cylinder.

With medium and large-bore engine cylinders, the multi-hole orifice, Fig. 3, gives an ideal spray formation. When the size of the engine cylinder decreases (and high-speed engines are, as a class, of small bore), the amount of oil injected into the engine cylinder is very small. The diameter of each of the spray-valve openings then must be exceedingly small in diameter.

If large holes were used, the amount of oil entering through each opening would be relatively so large that the pump (which actually is delivering a small quantity of oil to the spray valve) would not maintain a high pressure on the oil. The oil would then simply dribble into the cylinder, for the atomization depends upon the velocity of the oil as it enters the cylinder, and this velocity depends upon the pressure maintained by the pump.

Infinitesimal small nozzle openings would correct this trouble, but there is a limit to the nozzle openings below which diameter it is impossible to drill the hole. Furthermore, if the diameter of the hole is too small, even a minute piece of dirt in the oil may stop the oil flow.

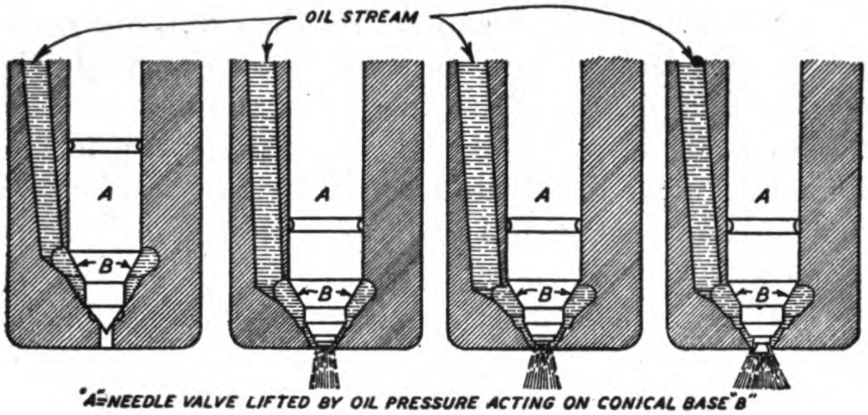

Fig. 4. Pintle-Type Spray Valve, Showing Oil Cone Formed

A single-hole orifice is then almost imperative with high-speed Diesels, even though it is difficult to drill a clean opening of, say, 0.01 inch diameter, which diameter would be necessary for most high-speed units of, say, 20 horsepower per cylinder. An orifice which, in effect, is a small-diameter hole is the pintle nozzle shown in Fig. 4. This is a relatively large opening into which is placed the *pintle* of the needle spray valve. When the pump pressure lifts the needle valve, the pintle, or tip, is not raised clear of the orifice, with the result that the orifice is the annular opening between the pintle and the interior periphery of the large hole, as inspection of Fig. 4. will reveal. The spray from a pintle-type nozzle is not so widely diffused as with the multi-hole orifice. It cannot completely mix the oil with the air charge.

According to A. M. Rothrock, of the Langley Memorial Aeronautical Laboratory, the recent researches conducted by the National Advisory Committee of Aeronautics have shown that in the high-speed Diesel, most of the fuels used vaporize with sufficient rapidity to obtain efficient combustion. The greatest hindrance to the lack of complete utilization of the air in the combustion chamber is caused by the poor distribution of fuel both in the liquid and in the vapor phase. Improvements in this distribution can be obtained only through improved injection-nozzle designs or through the more effective utilization of air flow in the combustion chamber. With the present injection systems, the fuel is injected with sufficient rapidity, and it is subdivided into sufficiently small drops to obtain favorable air-fuel ratios throughout the combustion chamber, but the drops are not correctly distributed. This lack of distribution is shown very clearly in the high-speed motion pictures of the fuel spray and its combustion.

To obtain mixing of fuel and air, it is necessary in most high-speed Diesels to move the *air* to the fuel.

After the spray enters and is diffused into the cylinder, a three-stage combustion process ensues as follows:

(1) The oil particles must be heated up to a temperature high enough to permit self-ignition when the oil meets the oxygen. This heating is necessary even if the oil remains in the liquid state and since the oil actually vaporized before ignition, it must be heated to the boiling temperature, about 700°F. as a minimum. The heating of the oil may absorb so much heat from the air charge as to cause a perceptible drop in cylinder pressure.

Vaporization starts as soon as the first droplet of oil enters the cylinder and continues until the entire oil charge has changed into oil vapor; the vaporization even continues after combustion of the oil already vaporized, has occurred.

(2) The second step in the combustion process is ignition of the oil charge. Ignition occurs shortly after the first oil particle enters the cylinder. The time interval is the "ignition lag" and it varies with the kind of fuel oil, the compression pressure, and other engine characteristics. Ignition may start in any portion of the fuel spray. Motion pictures reveal that the first flame may occur at a point removed from the spray nozzle or may occur simultaneously at several places.

In a well designed engine, ignition occurs before the entire fuel charge enters the cylinder and burns.

(3) The third step in the combustion process then ensues, with the oil burning as fast as it enters the cylinder.

COMBUSTION KNOCK. As has been mentioned, the first ignition of the fuel charge may occur at some spot in the mass of fuel and air. If the initial ignition is delayed so long that the entire mass of fuel has entered the cylinder and has become vapor, the primary ignition may be followed by a rapid combustion (a real explosion) of the entire fuel mass. This explosion may set up a pressure wave which, traveling at the speed of sound, strikes the metal walls and there produces a sharp knock called "combustion knock." It is highly desirable then, to arrange the design so that the first part of the oil charge is ignited before the entire oil charge enters the cylinder. The flame of the first particles then insures a continuous ignition and combustion of the remainder of the fuel as fast as the oil enters the cylinder. To accomplish this, there are various designs of combustion chambers, all intended to prevent combustion knock, but most designs fail in their purpose.

There may be also a fourth period, which might be termed "afterburning." This period includes the combustion that takes place after injection has stopped. The rate of burning during this period is slow and results in little power increase. This fourth period should be merged into the second period if the thermal efficiency of the high-speed Diesel is to reach the values inherent in the cycle at the compression ratios employed.

During this afterburning period, the combustion chamber contains a mixture of nitrogen, oxygen, carbon dioxide, steam, vaporized fuel and products of partial combustion. The percentage of inert gases is high because of the combustion that has been completed. As a result, the mixing of the active gases and their subsequent combustion take place slowly, extending to as late as 80 degrees of crank travel after top center. This late burning has a low expansion ratio and consequently decreases the over-all cycle efficiency of the engine although the final combustion efficiency may be high.

The reader will realize that the difficulty of obtaining mixing of fuel and air, and of securing efficient combustion increases as engine speed increases. A four-cycle Diesel at 300 r.p.m. injects and burns the oil charge in 30 degrees of crank travel. Such an engine covers $\frac{300 \times 360}{60} = 1800$ degrees of crank travel per second, so the 30 degrees of injection and combustion occurs in $\frac{30}{1800} = \frac{1}{60}$

seconds, or approximately 0.017 seconds. A high-speed Diesel turning at 1800 r.p.m., will use the same 30 degrees of crank travel, but the actual time interval is only one-sixth that of the 300 r.p.m. engine, or about 0.003 seconds. Such a short time as $\frac{3}{1000}$ seconds cannot be visualized by a human being. The obstacles to be overcome by the engine designer are obvious.

FUEL-AIR MIXING. As has been mentioned, it is difficult, if not impossible, to diffuse an oil spray through the combustion space of a high-speed Diesel. This has led to the plan of moving the air in the cylinder so that the air flows into and across the oil streams.

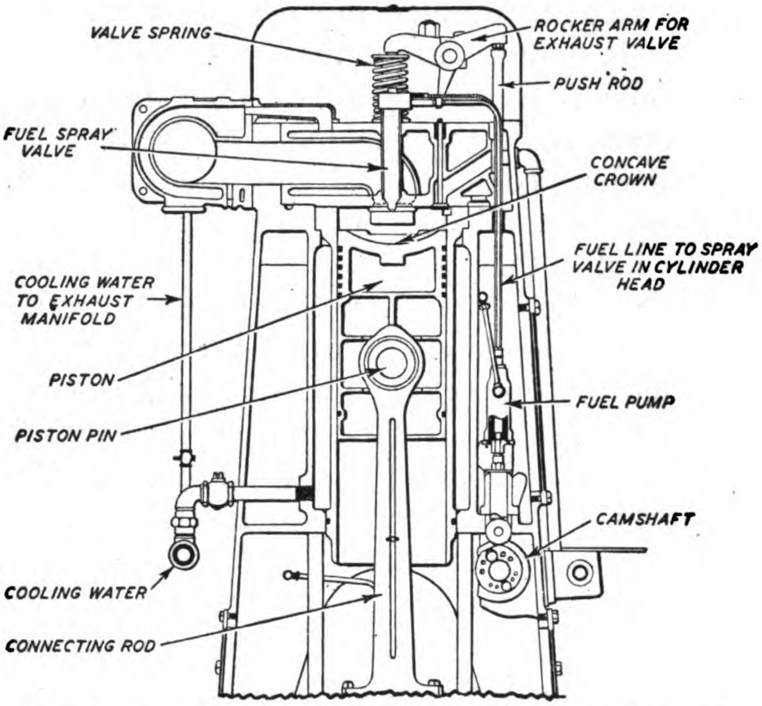

Fig. 5. Piston with Concave Head Which Crowds Air Toward Center When Piston Approaches Top Dead Center

Air movement is obtained by various methods. These are: (1) entrance swirl, (2) piston swirl, (3) turbulence chamber, (4) precombustion chamber, and (5) air cell.

Entrance Swirl. Air flowing into the engine cylinder may be given a circular path which curvilinear flow will continue during the compression stroke. When the oil is sprayed into the cylinder, the air, flowing in the combustion space in a circular path, passes through the oil spray. This insures thorough mixing of air and oil.

Piston Swirl. If the piston has a concave crown, as shown in Fig. 5, when the piston approaches the end of its stroke, the air between the cylinder head and the high outer surface of the piston crown is forced into the concave section. The air flow is a twirling tumbling mass (turbulence), mixing with the oil, sprayed toward the center of the piston.

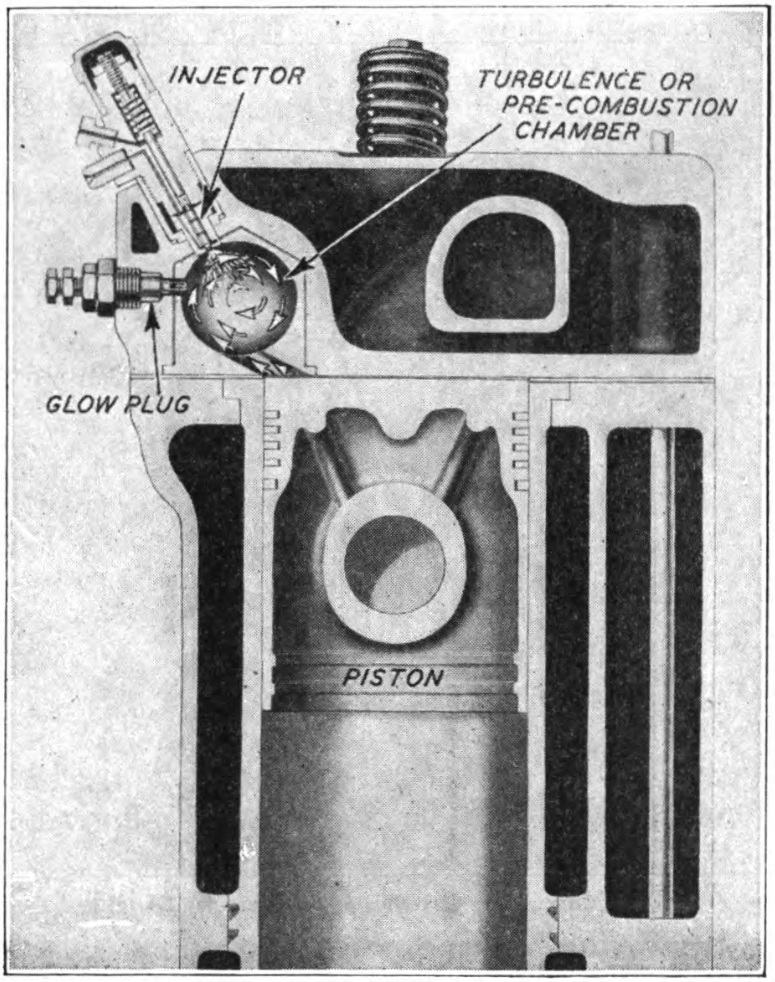

Fig. 6. Turbulence Chamber Employed on the Waukesha-Comet Diesel

Turbulence Chamber. To give the clearance volume a shape more favorable than the pancake form already mentioned, designers have formed a hollow sphere, into which all the air between the piston and cylinder head is forced when the piston reaches top dead center on the compression stroke. There is no clearance between piston and cylinder head except that necessary to prevent the piston mechanically striking the head.

Into this turbulence chamber is injected the oil spray which meets the entire mass of air which, having been given an initial velocity by the piston motion, rotates in the sphere at a high velocity. The action is shown in Fig. 6, depicting the action in the Waukesha-Comet Diesel.

While several engine designs place the turbulence chamber in the cylinder head, others place the chambers at the upper portion of the cylinder casting. Fig. 7 shows the arrangement found on the Hercules Diesel.

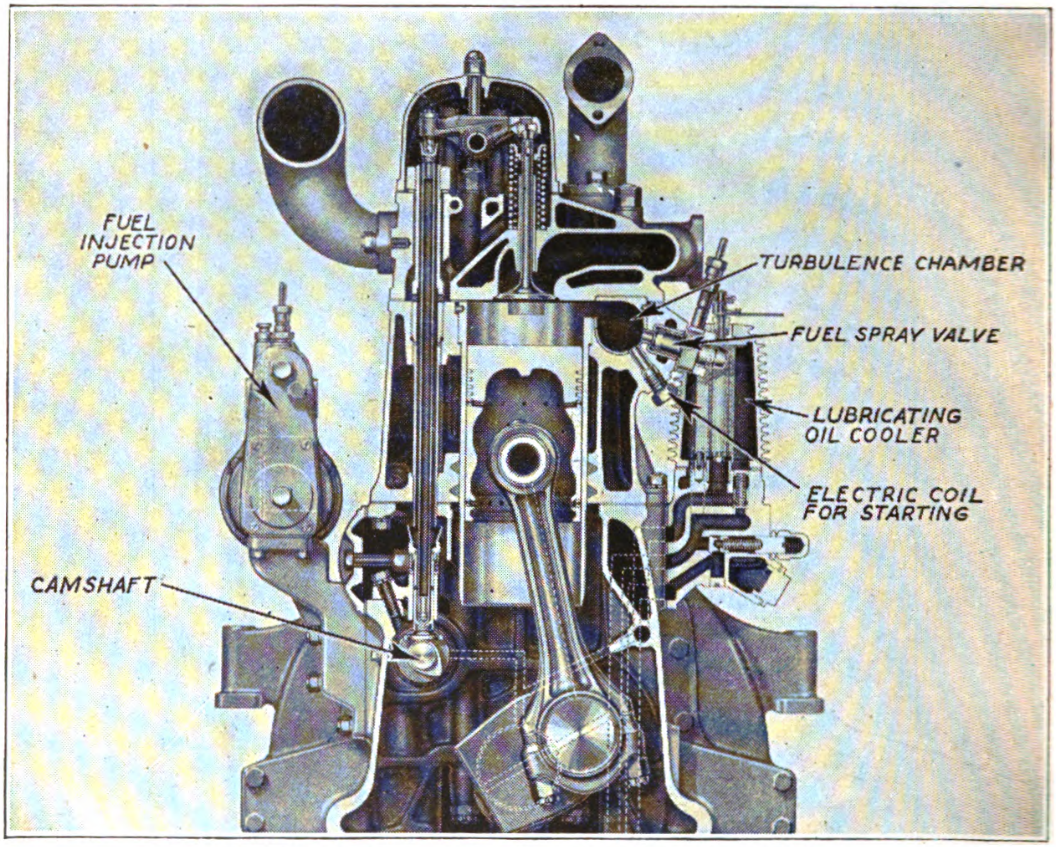

Fig. 7. Turbulence Chamber of the Hercules Diesel

In all turbulence chambers, the position of the spray valve is of greatest importance. If the oil spray is not directed toward the throat connecting the chamber with the cylinder, combustion will be indifferent, and the engine will fail to pull its rated load. Experience proves that the oil spray must pass across the air stream.

The turbulence chamber brings with it one operating difficulty. The chamber is fairly surrounded with cooling water. If the engine has been idle for some time, the chamber becomes cold. The air warmed in the cylinder by compression, rushes into the turbulence chamber and loses much of its heat by conduction to the cold wall of the throat.

It is necessary, as a consequence, to provide some device to add heat to the air. This may be a coil heated by a flow of electricity from the starting battery, as in Fig. 7, or a "punk" cartridge, a cylinder of blotting paper saturated with a chemical, or in an emergency, a tobacco cigarette may be called into service to add heat to the air.

Pre-combustion Chamber. A pre-combustion chamber, Fig. 8, is a feature of several high-speed Diesels, notably the Caterpillar Tractor Diesel.

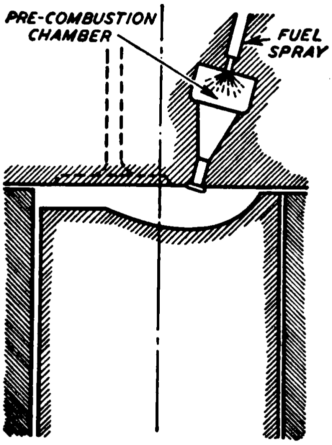

Fig. 8. Pre-combustion Chamber, Such As Is Employed on Many Diesels

The basic principle of the pre-combustion chamber is that when the piston completes its compression stroke, some of the cylinder charge of air is forced into the pre-combustion chamber, but about 65 per cent of the air remains in the cylinder. The air forced into the chamber is not enough to unite completely with the oil charge when the latter sprays into the chamber. As a result, no carbon dioxide is formed; instead, only carbon monoxide results and some of the oil merely vaporizes. The pressure rise due to the partial combustion causes the carbon monoxide gas and vaporized oil to blow into the engine cylinder where the gaseous mass mixes with the hot air, and combustion is completed.

One advantage of the pre-combustion system is that the oil may be injected early enough to heat up and vaporize, without danger of serious pre-ignition. The limited amount of air in the chamber holds the pressure rise to a reasonably low value.

In Fig. 9 is shown a section through the McCormick-Deering Tractor Diesel, in which is a pre-combustion chamber.

It is the custom to have the oil spray directed toward the throat opening, so that the oil stream flows in opposition to the air stream.

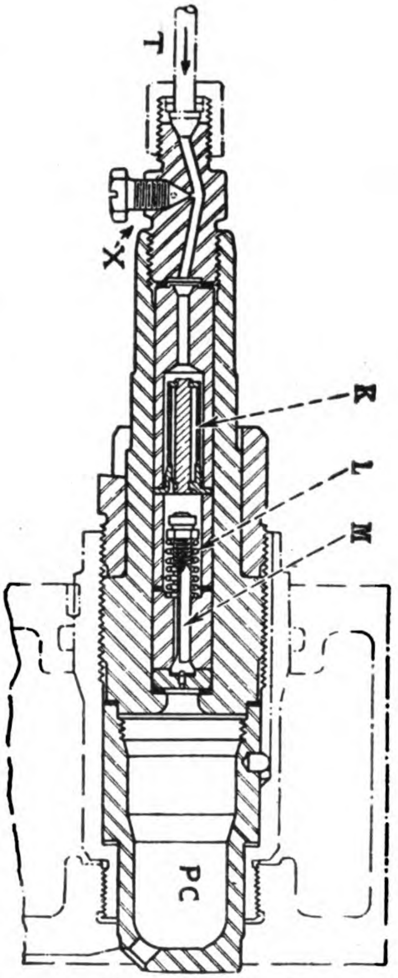

(PC) **Combustion Chamber**
(M) **Check Valve**
(L) **Check Valve Spring**
(K) **Filter**
(T) **Oil Line**
(X) **Bleeder or Vent**

Fig. 9. Pre-combustion Chamber of the McCormick-Deering Diesel

There are, however, several designs where the oil is sprayed in the same direction as the air stream.

The disadvantage of the pre-combustion chamber is starting difficulties, for the heat loss to the cooling water may be high.

Air Cell. When direct injection is adopted, as has been pointed out, it is almost impossible to mix all the oil with all the air in the clearance volume. The consequence is that part of the gases at the end of the combustion period is the original air, part over-rich gases, that is, carbon monoxide. Complete combustion would be accom-

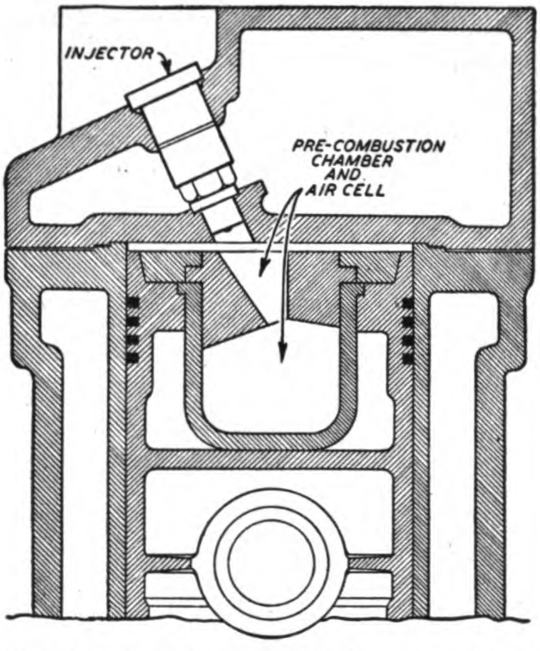

Fig. 10. Acro-Bosch Air Cell in Piston Crown

plished if the air and the over-rich gases could be given an additional mixing action.

Designers bring this about by adding an *air cell.* This is a small chamber in the piston crown or in the cylinder head. The piston forces air into this cell during the compression stroke. Combustion occurs in the engine cylinder and the pressure rises, which raises the air pressure in the air cell. After the piston starts on the power stroke, the cylinder pressure drops; whereupon, the high-pressure air in the air cell flows out into the cylinder and by its velocity gives

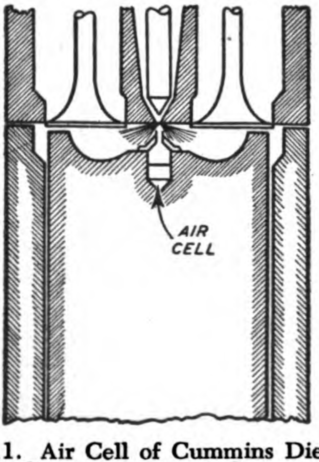

Fig. 11. Air Cell of Cummins Diesel in Center of Piston Crown

a final mixing or turbulence, to the mass of burning gases and air, and so completes combustion.

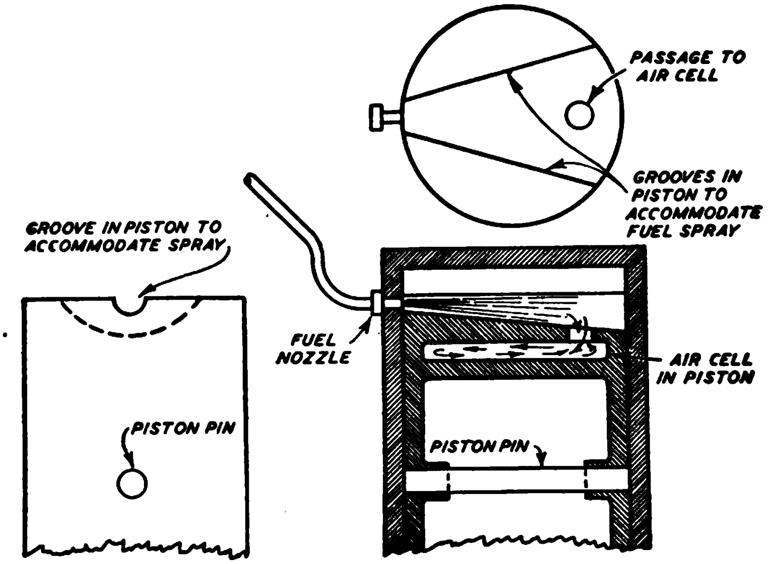

Fig. 12. Air Cell of Witte High-Speed Four-Cycle Diesel

The Acro-Bosch system has the air cell in the piston crown as shown in Fig. 10, a cross section of the Stover high-speed Diesel. In this design, the oil sprays into the throat of the cell.

The Cummins Diesel has a small cylindrical air cell in the center of the piston crown, as shown diagrammatically in Fig. 11.

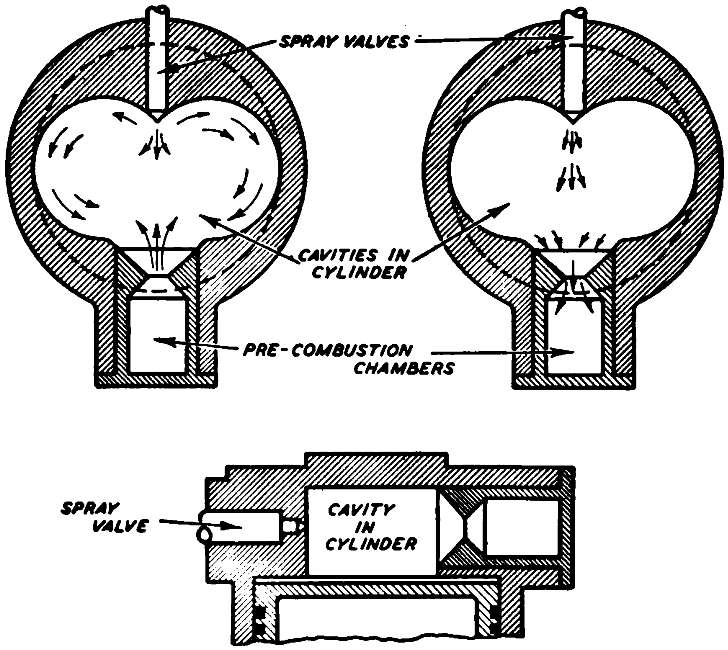

Fig. 13. Lanova Combined Turbulence and Air Cell Combustion System

Even though the Cummins fuel injector injects a very hot oil charge, thinly increasing the usual effect, the air cell does improve the engine's efficiency. The Witte high-speed four-cycle Diesel has an air cell in the piston along the lines of Fig. 12.

Lanova System. The Lanova system used on the Buda, the Mack, the Dodge and the Thornburg Diesels is a combination of two shallow turbulence chambers and an air cell. As shown in Fig. 13, in the lower surface of the cylinder head is cast two pancake-like cavities; and on one side is inserted a spray valve. The oil jet crosses the two cavities and part enters the throat leading to a pre-combustion chamber. Partial combustion forces the oil and gases back out the throat where the fuel meets the circulating air currents, set into motion by the piston travel. Complete mixing and combination results.

Chapter 9

Fuel-Injection Nozzles

Far more than the average operator realizes, the performance of a Diesel engine depends upon the condition of the nozzles, or spray valves, through which the oil is sprayed into the cylinder. If the spray valve leaks, oil may enter the cylinder too early if the *common-rail* system is used, with pre-ignition as a result. If the valve is a simple check valve, there will be *after dribble* in case the valve seat is imperfect. This will cause late burning and a smoky exhaust. If the valve is spring loaded, a wrong spring pressure may cause vibrations of the valve and indifferent oil spraying. It is obvious that the spray valve is a vital part of a Diesel engine.

TYPES OF SPRAY VALVES. All fuel spray valves may be divided into three clases: (*A*) Mechanically-operated needle valves; (*B*) open type (either with or without a check valve); (*C*) differential spring-loaded valves.

MECHANICALLY-OPERATED VALVES. Common-rail Diesels employ mechanically-operated needle valves of the same design as those found on air-injection Diesels. There is one slight difference. In the air-injection engine the fuel valve carries a set of perforated disks in the cage which insures mixing of the fuel in the injection valve as the two fluids flow toward the opening into the engine cylinder. The valve of the common-rail Diesel is a needle which, when lifted by the cam mechanism, uncovers the orifice into the cylinder. The oil is forced through the orifice solely by the high pressure in the fuel header piping (from 4000 to 6000 pounds per square inch).

Atomization of the oil depends upon the velocity of the oil streaming into the cylinder. This velocity is close to 800 feet per second, varying with the oil pressure.

CARE OF NEEDLE VALVE. The lift of the valve must be correct or too much oil will enter the cylinder. The amount of oil may be controlled, of course, by reducing the oil pressure, but this will reduce the velocity of the oil spray and so impair the degree of atomization. In practice it is better to vary both the lift and the pressure.

The engine builder gives the lift data or the clearance between the needle collar and the rocker. This should be checked occasionally.

The spring which closes the needle after the cam opens it, must not have too much compression, or be too *strong.* If too much spring pressure is exerted, the conical end of the needle will be buried in the casing, and oil, then, will be unable to enter the cylinder, since the lift of the needle will not bring the end clear of the seat.

Excessive spring pressure will cause the needle to bounce, or chatter, on its seat. This permits oil to enter the cylinder long after the time when the flow should cease. To correct the trouble, the spring should be loosened a little. If the pressure is then too weak, close the needle; it is possible that the packing is too tight around the stem. New packing should be inserted.

Some fuel oils contain hydrogen sulphur. This compound frequently causes corrosion of the needle valve at the point where the stem passes through the packing. This permits oil leakage, and if the packing nut is tightened to correct the trouble, the needle stem is jammed. The proper correction is to install a new needle and, if possible, change the oil supply.

GRINDING NEEDLE. When the point, or cone, of the needle and its seat above the orifice become worn, it is necessary to grind the needle to a new seat.

To do this the valve and cage are removed from the engine and disassembled. The minute supply of the finest grinding compound is then smeared upon the needle tip. The needle is then slipped into the cage, with the spring put aside. The needle is gently rotated against the valve seat. This is continued until inspection of the needle tip shows that there is a narrow bright band of finished surface completely around the tip. To observe the finish of the valve seat, a light beam is cast down through the cage.

If the seat is hopelessly damaged, it will be necessary to replace the cage end with a new one; this must be ground in with the needle.

TIMING OF NEEDLE VALVE. It should be understood that each engine design has variations in the timing and method of lifting the valve.

OPEN SPRAY VALVE. The earliest semi-Diesel engines employed a simple pump to inject the oil charge into the cylinder. Since the oil entered the cylinder early in the compression stroke there was ample time for vaporization even if the oil spray was extremely coarse.

In addition, the oil usually was directed upon a hot bulb, which broke the stream into a fine mist of gas and oil droplets.

DIFFERENTIAL SPRING LOADED VALVES. A high degree of fuel atomization is necessary when the oil is sprayed directly into the cylinder of the engine. This is for the reason that the depth of the combustion chamber is only about $1/16$ of the piston stroke (and frequently less by reason of valve recesses increasing the clearance volume). For example, in a 10-inch stroke engine the distance between cylinder head and piston top is only $1/16$ of $10 = 0.6+$ inch. Obviously, it is difficult for a spray to reach across the cylinder diameter when the depth of clearance space is this small. A single hole in the nozzle would shoot the oil directly downward upon the center of the piston crown. As a consequence, the spray valve must have several holes, or orifices, to properly distribute the charge of oil. But it happens that the oil charge of even a large engine is extremely small. To put this minute amount of oil through several orifices at a velocity sufficient to atomize the oil, demands that the size of the holes be very small, from .010 to .020 inches in diameter. The fuel pressure to give a high oil velocity reaches from 3,000 to 10,000 pounds per square inch.

To properly control the amount entering the cylinder, the spray valve must be capable of shutting off the flow promptly when the pump stops its delivery. There must be no *after dribble* brought about by the expansion of the oil in the pipe line when the pump pressure drops. All these factors require that the valve be spring loaded, to lift when the pump has raised the oil pressure to, say, 4,000 pounds and close when the pressure drops slightly. This has led to the design of the spring-loaded differential needle valve.

The nozzle or orifice end of a typical spring-loaded valve is shown in Figs. 1 and 2. These two views are the Bosch design. In Fig. 1 at *A* and *B* is shown the pintle design of nozzle in the closed and open positions.

A complete nozzle consists of two parts—the nozzle valve and the nozzle body. The nozzle valve is formed as a circumferentially grooved barrel, which at its lower end is reduced down to form a valve face and ends in the *pintle* which projects through the mouth of the nozzle body.

Fuel is fed to the nozzle mouth by means of small tunnels bored in the nozzle body, which terminate in a small reservoir just behind the face of the nozzle valve seat.

As the nozzle valve is a highly ground plunger fit for the nozzle body, it is not interchangeable and the two parts should be kept together as a *pair* always.

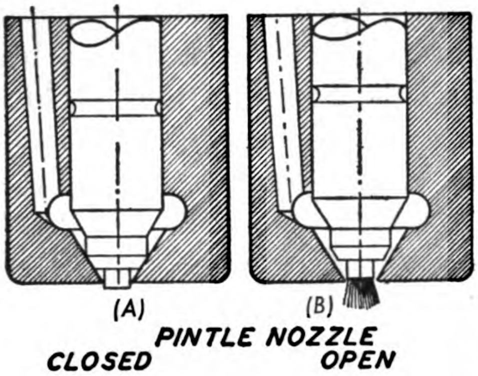

Fig. 1. Pintle Type Spray Orifice

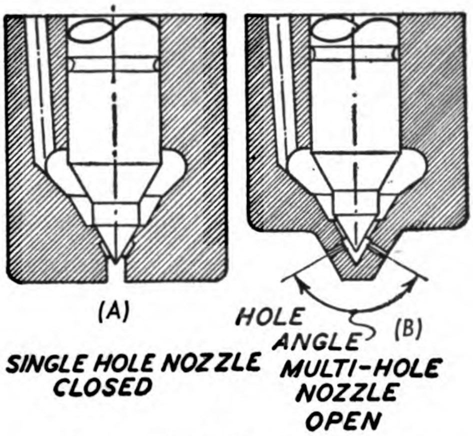

Fig. 2. Hole Type Spray Orifice

Pintle nozzles are built to give spray cones of 4, 6, 8, 15, and 30 degrees as follows:

with 5 mm. diam. of nozzle valve and 1 mm. diam. of pintle
with 5 mm. diam. of nozzle valve and 1½ mm. diam. of pintle
with 6 mm. diam. of nozzle valve and 2 mm. diam. of pintle
with 7 mm. diam. of nozzle valve and 3 mm. diam. of pintle

These sizes of nozzles are supplied in two different outside dimensions (a) for nozzle holders with barrel diameter of 25 mm. (size S, weight about 1½ ounces); and (b) 32 mm. (size T, weight about three ounces)

HOLE TYPE. The *hole* nozzle, in two designs, is shown in Fig. 2 at *A* and *B*. *Hole* nozzles differ from the *pintle* type in the form of spray produced. They are offered (1) as single hole type as in Fig. 2 at *A*, where the nozzle is shown closed. The axis of the spray hole can be on the center line (as shown) or inclined at an angle to it, whichever suits the combustion chamber required; (2) the multi-hole type of nozzle is shown open at Fig. 2 at *B*, this type being intended primarily for engines with direct injection, where the fuel is to be well distributed over the combustion chamber. In this type of nozzle, the angle formed by the axis of the spray is termed the ***hole angle.*** These nozzles are supplied with from 1 to 7 holes with hole diameters of from 0.2 mm., rising by 0.05 mm. upwards.

Hole nozzles are also supplied in two different outside dimensions for nozzle holders of 25 mm. diameter (size S, weight about 1½ ounces) and 32 mm. diameter (size T, weight about 3 ounces).

NOZZLE HOLDERS. In order to hold the nozzle in the engine combustion chamber and to connect it up with the fuel piping, a nozzle holder is used, Fig. 3 At the end of the holder is a highly-ground face which forms a joint with the flange of the nozzle body by means of a nozzle cap nut *B*. Fuel is fed by the piping connected to the fuel inlet connection *A* through a tunnel in the barrel of the nozzle holder which terminates in an annular semi-circular groove at the ground face of the flange of the nozzle body *A′*.

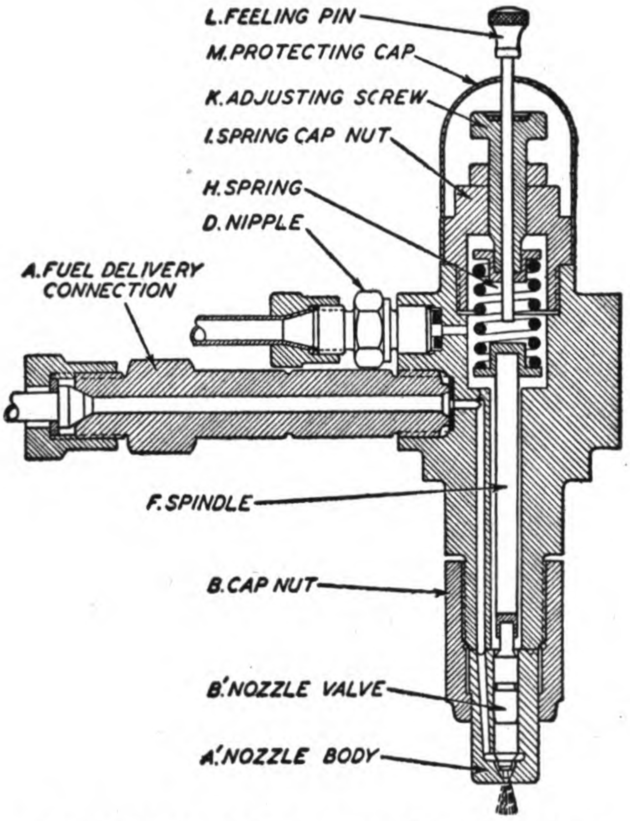

Fig. 3. Section of Bosch Spray Valve Holder with Open Pintle Nozzle

The nozzle valve *B′* is kept on its seat by means of the valve spring *H* and the spindle *F*. The pressure at which the nozzle valve will lift depends upon the amount of compression placed upon the spring *H* which is adjustable by means of the adjusting screw *K*. A feeling pin *L* passes through the center of the compression screw, which enables the functioning of the nozzle valve to be felt with the finger while the engine is running—slight shocks indicating that the nozzle is in operation.

Any slight leakage of fuel which may accumulate above the valve, can be led away to a drain tank by means of a pipe connected to the leak-off nipple stud *D*.

In fitting the nozzle holder into the cylinder head, care should be taken that the lower end of the barrel is adequately cooled. This may be done by means of a thin copper sheath tube expanded into the cover. The tube should be a *glove fit* for the nozzle holder, so as to facilitate the transference of heat. **Note:** In fitting this tube to the cover, it is advisable to take care that the lower and upper bearing joints for the tube are bored on the one setting of the machine.

In certain cases, it is advisable to provide for the air venting of the delivery pipe system. The Bosch nozzle holder with air-vent screw provides for this requirement.

CLEANING OF NOZZLES. When working under bad conditions, the nozzles may become dirty. The interior of the pintle type nozzle should be cleaned by being soaked in petrol or paraffin, and blown through with air. The nozzle valve face should only be rubbed with a piece of clean cloth, soaked in paraffin. On no account should a hard or sharp tool, glass paper or triangular scraper be used to clean either nozzle valve or body. Before returning the nozzle valve to its body, it should be dipped into clean paraffin so that on being brought together the nozzle valve will move freely in the nozzle body.

In the case of multi-hole type nozzles, the small holes can be cleaned by a special tool which may be obtained from the engine builder.

CARE OF NOZZLE. The spray nozzles have small holes through which the oil is forced and which breaks up the fuel into the form of a spray. After long use these holes will gradually wear larger and new spray nozzles should be obtained. Any dirt or fine grit in the fuel oil will cause the spray nozzles to wear out in a very short time and for this reason every precaution should be directed toward keeping the fuel oil as clean as possible. The dirt will also cause leaky valves as it will settle on the seats and become bedded into them, preventing the valves properly seating. Should the dirt entirely plug the holes in the spray nozzle, the oil in the plug and fuel line will have no outlet and the pressure from the pump will in all probability rupture some of the parts. It is thus very important to keep all dirt out of the fuel.

The differential valve effectively prevents the high pressures within the cylinder from displacing any of the oil in the spray nozzle or fuel line and it also prevents any drip from the nozzle which is a common fault with the so-called open type. It is very necessary that this valve does not leak as it would cause the engine exhaust to smoke or the engine to race when the load is applied. In order to grind this valve, the spray nozzle should be removed from the spray nozzle holder which will expose the top end of the valve which you are now ready to grind. This valve should be ground to a perfect seat, the grinding to be done with special grinding compound. In like manner, the hole in the nozzle in which this valve works or the valve seat in the nozzle dare not be scratched. When grinding, grind only enough to get a good seat, otherwise a shoulder will be formed which may hold the valve off its seat entirely. If the valve has a tendency to stick in the hole in the nozzle, this same special grinding compound should be used. Grind only enough to free the valve in the hole as these parts can very easily be ruined entirely if the valve fits the hole too loosely, in which case they should be replaced from spares. Always keep the valve and nozzle together as you find them as they are ground and lapped together as pairs at the factory and will not fit in any other combination. After you have finished grinding the valve and nozzle, be sure to clean out all of the grinding compound or any other dirt as this will clog up the holes in the spray nozzle when you try to start the engine.

FUEL SPRAY VALVES. With the exception of the Cooper-Bessemer engine system following, most high-speed Diesels in this country employ differential-needle spray valves of the general type shown in Fig. 4. Oil is delivered by the fuel pump to the fuel line. This oil flows down the passage to the chamber *A* at the bottom of the spray valve casing. The continued movement of the oil displaced by the pump raises the pressure in this chamber until the total pressure acting on the differential area created by the two diameters of the needle valve, overcomes the force of the spring. The needle valve lifts and the lower tip leaves its seat, so that oil flows through the orifice into the engine cylinder. As soon as the tip leaves its seat, the total area upon which the oil pressure acts, to hold the needle away from the seat, is increased by the cross-sectional area of the tip itself. Consequently, once the needle opens, this excess pressure lifts the needle still higher. As soon as the pump slows down its delivery of oil, the pressure in the oil chamber falls, but the needle will not drop down onto its seat until the pressure drops below the pressure which caused the needle to lift. Consequently, if this closing pressure is too low, the oil spray through the orifice will be coarse and the oil may even dribble in drops, resulting in poor combustion.

The oil pressure at which the needle lifts depends upon the strength of the spring. After the needle opens, the oil pressure depends upon the area of the orifice in relation to the pump plunger displacement. Too large an orifice will cause the oil pressure to drop, which may then be less than the spring pressure, whereupon the needle will be forced to its seat. Since no oil now flows through the orifice, the pressure on the differential area will rise. In turn, the increased oil pressure will overcome the spring force, to lift the needle. Flow through the orifice will be resumed, and the oil pressure will again drop, closing the needle valve. This continued action is termed "chattering" and results in poor combustion.

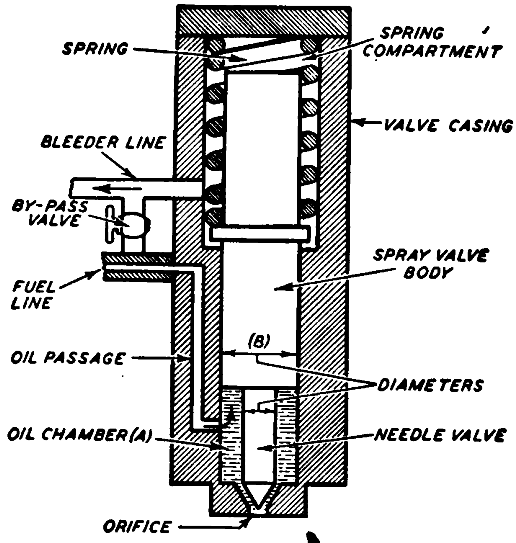

Fig. 4. Differential-Needle Spray Valve

To correct the difficulty, the orifice diameter should be reduced, by replacing the tip.

When "chattering" occurs with the correct orifice diameter, the spring pressure may be too strong. The pump then must raise the oil pressure unusually high, to lift the needle, and rate of flow of oil through the orifice is increased by reason of the high oil pressure. This rate may be so high that the pump does not maintain the pressure; consequently, the spring forces the needle to its seat.

Orifice Diameter. The diameter of the spray orifice will vary from 0.01 to 0.02 inch diameter. The minimum diameter depends upon mechanical limitations, for it is difficult to drill a satisfactory hole below 0.01 inch. Furthermore, an orifice of less than 0.01 inch almost becomes a filter and is liable to become clogged with minute dirt particles.

Obviously, the smaller the orifice the finer will be the atomization. When the quantity of oil handled is above the capacity of one small orifice, the designer adds more orifices, so that in the larger engines as many as 10 orifices of 0.02 inch diameter are used in one spray valve.

Spray Pressure. The pressure under which the oil is placed to lift the needle valve, varies according to the engine design, ranging from 10,000 pounds per square inch down to 2000 pounds. An average value of high-speed Diesels of 3¾-inch to 6-inch cylinder bores is 5000 pounds.

Bleed-Off Line. There must be some clearance between the enlarged diameter *B*, Fig. 4, of the needle and the valve casing. Oil will creep up along this clearance and finally build up an oil pressure in the spring compartment, which acting upon the upper end of the needle, will prevent the oil pressure acting below the enlarged diameter *B*, from lifting the needle. To eliminate this, the "bleeder" line permits the seepage oil to escape.

In order to prevent oil from entering the engine cylinder in case of trouble, the by-pass valve can be opened. This allows the oil flowing to the by-pass valve through the fuel line to pass directly through the valve by-pass to the bleeder line.

Carbonized Orifices. If an engine operates at heavy load and the cooling of the spray valve is inferior, carbon will build up on the end of the nozzle tip within the cylinder. This carbon will be in the form of a hollow cone, and more and more carbon accumulates until the nozzle becomes clogged. To correct this, some nozzles are provided with a cooling water passage, to keep the tip cool and carbon free.

Scored Needles. Dirt may settle on the valve seat and damage the seat and needle tip when the spring pressure snaps the needle to its seat.

While an experienced mechanic is able to regrind the parts, the better method is to replace the defective parts with new ones.

TYPICAL SPRAY VALVE. Many Diesel builders use the Bosch spray valve, Fig. 5. The valve-stem is lapped (fitted accurately) in the guide bushing to a fit which makes any form of packing unnecessary; as a matter of fact, packing cannot be used without danger of the stem becoming too tight when the packing is compressed. An air vent should be provided at the uppermost part of the nozzle, to dispose of any air which may accumulate in the fuel line or in the nozzle, thereby avoiding "air binding."

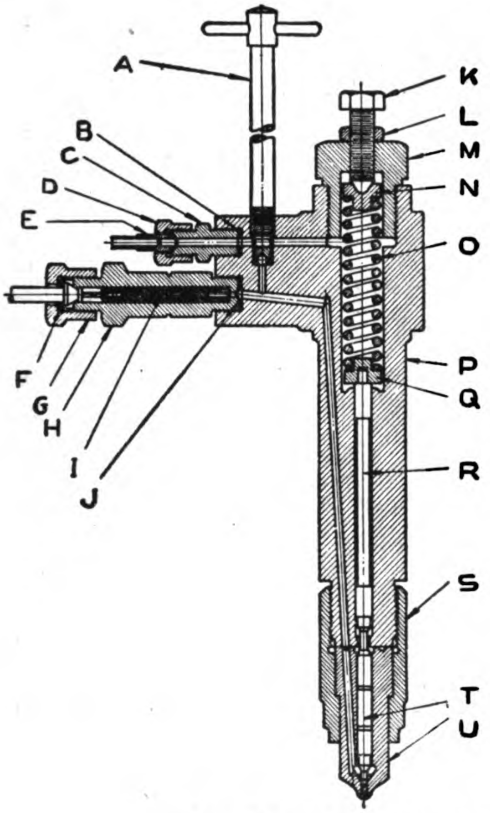

(A) Bleed, or Bypass Valve
(B) Gasket
(C) Connector
(D) Packing Gland
(E) Bleed, or Vent Line
(F) Oil Line from Pump
(G) Gland
(H) Connector
(I) Oil Filter
(J) Gasket
(K) Spring Adjuster
(L) Lock Nut
(M) Adjusting Head
(N) Spring Holder
(O) Spring
(P) Valve Body
(Q) Spring Holder
(R) Upper Stem
(S) Coupling
(T) Differential Needle
(U) Tip

Fig. 5. A Complete Bosch Spray Valve

In the Bosch design, the nozzle and guide bushing are integral. The nozzle holder is secured to the cylinder head by the usual yoke and studs. It contains the loading spring and the threaded screw for adjusting the spring pressure, and is threaded at its lower end for the holding nut that secures the nozzle proper. The faces of the nozzle and its holder are ground and lapped to assure a good fit and freedom from leakage at any pressure. At the side of the holder are two connections, one for the fuel line and the other a bleed-off line to carry off, usually to the service tank, any fuel that may leak past the valve-stem. The loading spring is housed at the upper end of the nozzle holder, which is naturally the coolest portion. The lower end of the spring rests on a cap which in turn rests on the valve-stem proper, and the upper end abuts on the adjusting screw. A protecting cap covers the adjusting device. The holder is also equipped with a feeler pin which passes through a central hole in the adjusting screw. If this pin is depressed by the finger, the motion of the nozzle stem can be felt. This provides a convenient way to determine whether the nozzle is functioning.

Chapter 10

Fuel-Injection Pumps

Three features serve to distinguish the Diesel engine from the gasoline engine. First, the compression of the gasoline engine is low, ranging from 150 pounds per square inch downward to as low as 60 pounds, with 90 pounds the average for automotive engines; the Diesel employs a compression pressure of 400 pounds up to 550 pounds. Second, the gasoline engine draws into the cylinder during the suction stroke a mixture of air and gasoline vapor; the Diesel draws in a charge of air only, and the fuel is injected by some pump mechanism at the end of the compression stroke. Third, a spark ignites the air-fuel charge in a gasoline engine, while in the Diesel, compression to 450 pounds pressure raises the air temperature to 1000°F.; high enough to ignite the fuel when it is introduced.

Injection of the fuel at the end of the compression stroke is by no means advantageous *in itself;* in fact, if it were possible to do so, better combustion would result if fuel could be drawn in with the air charge during the suction stroke of the Diesel. The reason is that there is a greater time interval for complete mixing of fuel and oil during the flow through the intake manifold, suction stroke, and compression stroke, as compared to the limited time available when fuel is injected at the end of the compression stroke.

Injection of liquid fuel at the end of the compression stroke is imperative with the Diesel for the high compression raises the temperature of the air charge so high that if the fuel were in the cylinder during the suction stroke, spontaneous ignition would occur early in the compression stroke.

To obtain high efficiency, a high compression pressure is necessary which, to eliminate pre-ignition, requires fuel injection at the end of the compression stroke.

Injection of liquid fuel is then a necessity and not an advantage save in an airplane engine where a carburetor works indifferently under supercharging conditions.

Two basic methods of fuel injection are found on high-speed Diesels. The most popular is *impulse injection,* or as it is commonly called, "jerk-pump" injection; the second is *hydraulic injection,* or "common-rail" injection. Both have their adherents, but it is generally accepted that "jerk-pump" injection is the simplest for high-speed engines.

JERK-PUMP INJECTION. In the "jerk-pump" system, shown at (*A*), Fig. 1, a cam with a sharp nose rotates under the foot of the plunger working in the barrel filled with oil, and with a tube leading to the nozzle at the engine cylinder. The rotation of the camshaft at half engine speed brings the raised portion of the cam into contact with the pump plunger at a high velocity. The effect on the plunger is similar to the result if a lever was given a sharp jerk, consequently, the term "jerk-pump." The motion given to the pump plunger raises the oil pressure in the barrel and tube high enough to overcome spring pressure at the nozzle, and forces oil into the engine cylinder.

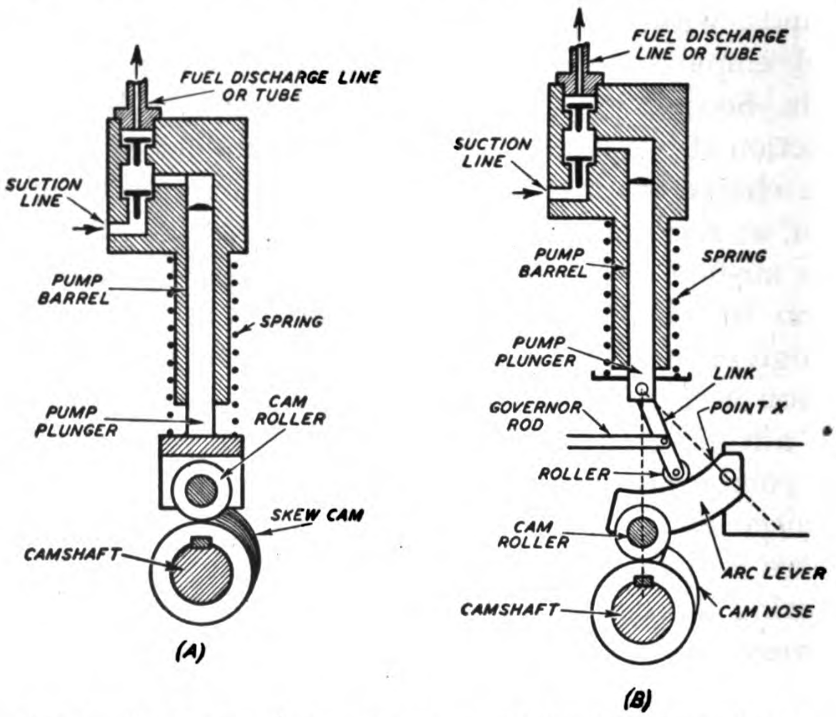

Fig. 1. (A) Showing an Impulse Pump with Variable Plunger Stroke (B) Showing Variable Plunger Stroke by Means of Arc Rocker Arm

FUEL CONTROL. The amount of oil injected into the cylinder is varied to meet the load conditions by any one of several devices.

Fuel injection pumps are classified as (1) variable-stroke pumps, in which the length of stroke is mechanically varied to suit changes in the amount of oil required; (2) constant-stroke pumps, in which the plunger travel is of fixed length and variation in quantity is obtained by valve control.

Constant-stroke pumps, notwithstanding the somewhat complex valve control associated with them, have yielded successful fuel-injection systems.

VARIABLE-STROKE PUMPS. Variable-stroke pumps may be actuated either by constant-throw cams with variable-ratio linkage interposed between them and the plungers, as shown at (*B*) in Fig. 1, or by bevel-flank cams capable of giving a variable throw as the result of being shifted endwise as at (*A*) in Fig. 1. During the interval of injection the plungers are accelerated from zero speed up to their maximum, and then return quickly to rest under the influence of heavy springs.

In Fig. 1 at (*B*), the barrel and valves are identical with those at (*A*) in Fig. 1. The cam has a straight cam nose. This cam contacts with a roller of the arc lever which has an arc-shaped upper surface. Upon this upper surface rests another roller of the link which is pinned to the pump plunger. If the governor rod moves the link until its roller is exactly above the lower roller, then the pump plunger will have an upward travel equal to the lift of the cam nose. When the governor shifts the link until the upper roller is at point *X* on the arc lever, the plunger will receive no motion when the cam nose raises the lower roller and the left end of the lever.

Bevel-flank cams for multi-cylinder engines are generally milled on a solid sleeve which is splined to the camshaft and arranged to be moved sidewise along the camshaft by the governor or other regulating mechanism. The cam rollers, shown in Fig. 1 at (*A*), for driving the plungers are either ground to a bevel corresponding to that of the cam, or they may have semi-circular faces adapted to make them move readily on the sloping contours of the cam surface. The force necessary to make the plunger move against the spring force and fuel pressure acts on the sloping cam in such a way as to urge it sidewise, so that considerable force must be exerted in positioning the latter for purposes of load control. In truck and tractor engines, the force necessary for moving the cams can be supplied readily by the foot pedal, but if the engine is governor controlled, the governor must be of adequate power for the service. In view of the limited area of contact between the cam and roller faces, it is essential that the latter be made of the highest-grade materials. Good continuous lubrication must be provided and dilution of the oil, with fuel dripping from the pump, must be effectively guarded against by means of positive deflectors.

Constant-throw cams of the normal type can be made to impart variable motion to a pump plunger by means of a wedge, as in Fig. 2. The position of the wedge may be controlled by a link connected either to a governor or a short crank on the control shaft. If the wedge is moved to the right, Fig. 2, the length of travel which it imparts to the pump plunger is increased.

CONSTANT-STROKE PUMPS. Constant-stroke pumps are valve-controlled by five general methods: (1) throttling the suction inlet; (2) bleeding the pump chamber with a needle throttling valve, as in Fig. 3 (almost the same as 1); (3) controlling the time of seating of the suction valve, Fig. 4. Here the lever fits in a slot in the plunger and its outer end contacts with the stem of the valve. The eccentric is shifted by the governor to cause the rocker to leave the valve stem earlier or later; (4) by-passing from the pump chamber by opening a special spill valve at various percentages in the discharge stroke, Fig. 5; (5) relieving the pump by the piston uncovering a by-pass or suction port during the discharge stroke, as in Fig. 6.

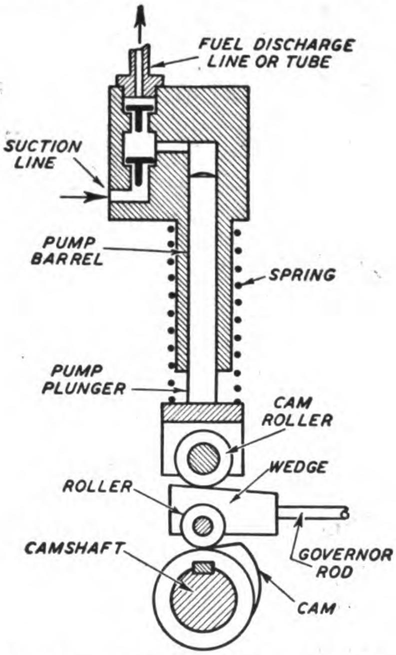

Fig. 2. Variable Plunger Stroke by Means of a Wedge

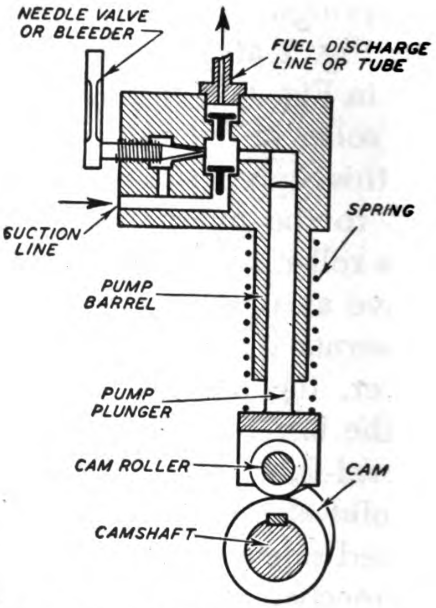

Fig. 3. Fuel Charge Delivered by Pump Is Controlled by a Bleeder Valve

Suction Throttling. Suction throttling regulation has the advantage of extreme simplicity and is adaptable mainly to small precombustion chamber engines requiring low injection pressures. As the suction movement prevents the pump from drawing in a full oil charge, a certain amount of vacuum is created and the pump chamber becomes partially filled with fuel vapor and sometimes air if there is leakage. During the return stroke, delivery does not start until the gaseous elements in the pump chamber have been compressed and accuracy, at the beginning of injection, is to some extent sacrificed.

Suction Valve Control. Suction valve control, Fig. 4, is generally carried out by some reciprocating mechanism which moves in rhythm with the pump plunger and momentarily interferes with the seating of the valve. As the plunger begins its discharge movement, the suction valve moves toward its seat, for its spring causes it to follow the motion of the rocker. Actual delivery begins at the moment when the suction valve touches its seat and the rocker breaks contact with the end of its stem. From that point on, until the plunger ends its stroke, oil is discharge.

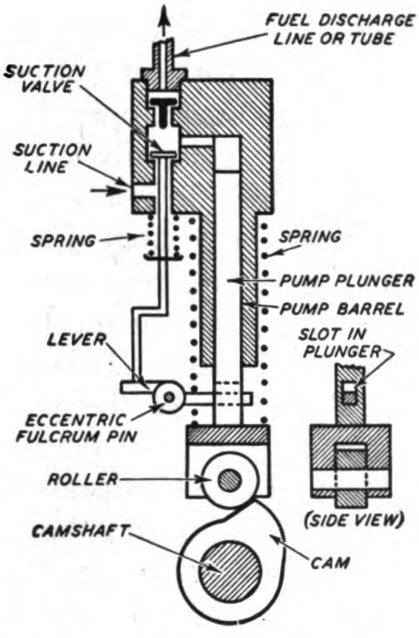

Fig. 4. Pump with Controlled Suction Valve

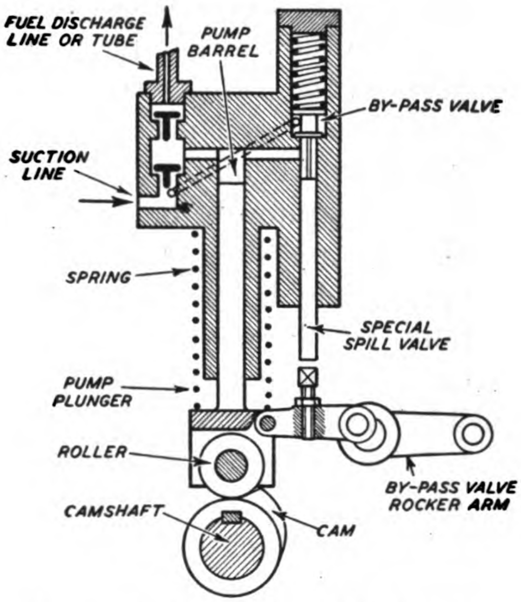

Fig. 5. Fuel Controlled by Opening the By-Pass Valve

The suction valve mechanism may derive its motion either from the plunger crosshead, as in Fig. 4, or from a cam or an eccentric mounted on the shaft which drives the plunger. In nearly all cases, the essential part of such a regulating valve is a rocker arm pivoted on the eccentric. The latter is placed in various positions, by hand or governor control, and changes the point of time at which the suction valve is allowed to touch its seat. The earlier this occurs, the more oil is delivered, and the greater is the angle of advance of injection. Although this change in timing would be impracticable with most forms of open combustion-chamber airless-injection engines, it apparently makes no difference with single-orifice pre-combustion chamber machines of low rating. A pronounced advantage of the suction-valve method of regulation is that the control mechanism, governor, etc., are not influenced by the injection pressure, which begins to build up only after the suction valve has seated and has lost contact with the control device.

Spill-Valve Control. Spill-valve control, Fig. 5, is effected in the majority of designs by a special spill valve, distinct both from the suction and discharge valves, and which is thrust open by the same kind of mechanism (rocker arm) as that generally used for suction valve regulation. The suction valve itself is not generally used for this purpose because its comparatively large area is subject to the full injection pressure and would, therefore, require a disproportionately large force to open it, imposing severe mechanical reactions on the regulating and governor mechanism. Hence, the mechanically-actuated spill valve is generally made of the smallest possible area. A compromise must be effected, however, because if the spill valve is too small, it will cause the fuel injection pressure to fall too slowly, and the fuel line between the pump and the spray valve will not relieve itself promptly and will encourage "after-dripping" at the spray nozzle. With these arrangements, the regulating tappet moves toward the stem and tappet of the spill valve, making contact with it at the moment when injection is to be terminated. The timing of the beginning of injection is therefore constant, whereas its end is a variable depending on the amount of fuel injected.

Port-Controlled Fuel Pumps. Port-controlled fuel pumps, Fig. 6, generally operated with plungers having grooves of suitable contours cooperating with openings in the side of the pump barrel. In the lowermost position of rest, the plunger's upper edge stands below the suction port, and oil is thrust back into the suction chamber during that portion of the upward stroke which is necessary to traverse the width of the port and close it. Delivery then begins. A longitudinal groove leading to the upper end of the plunger connects the pump chamber with an annular space around the plunger formed by milling a circumferential groove or neck in it, and delivery continues up to the point where this neck again uncovers the suction opening. This is the most popular design and is employed on 90 per cent of high-speed Diesels.

Distributor System. A development of the "jerk-pump" system is the "distributor" system. Here a single pump delivers a charge of fuel to a disk which rotates and consecutively brings the pump into communication with each fuel line leading to the nozzle in the several cylinder heads. This is shown schematically in Fig. 7.

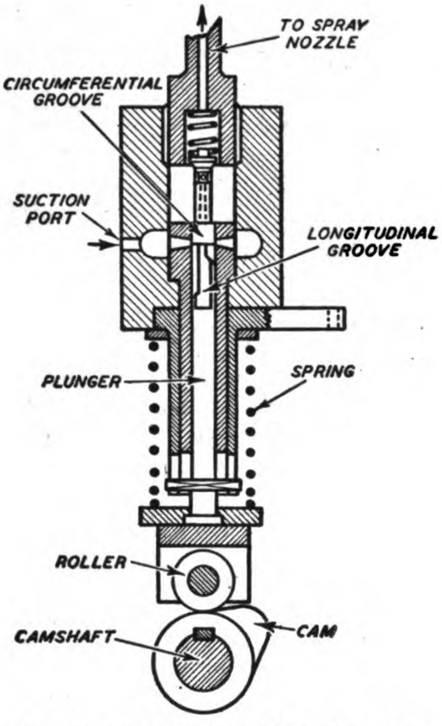

Fig. 6. Fuel Controlled by Location of Pump Plunger

The rotary pump is driven from the engine camshaft. Oil is delivered to the measuring pump. This is driven by the cam through the rocker. The cam has three noses on a six-cylinder engine. The camshaft runs at engine speed and as a nose comes under the roller of the rocker, the plunger moves upward, to deliver a charge of oil to the distributor. This distributor contains as many ports in its cap as there are engine cylinders. Each port leads to an engine cylinder.

The distributor is driven at engine speed and consecutively brings the port for each cylinder into communication with the pump through the passage in the disk. In this way, one pump serves all the engine cylinders. The advantage is that each cylinder receives the same amount of fuel. The quantity is varied by the control which shifts the pump plunger rod along the arc of the rocker. This is the principle of the Cummins Diesel system.

COOPER-BESSEMER FUEL PUMP. Cooper-Bessemer Diesels are equipped with a novel fuel-injection system. The engine employs a *common-rail*, so has a constant pressure on the fuel lines but the spray valves are not mechanically operated.

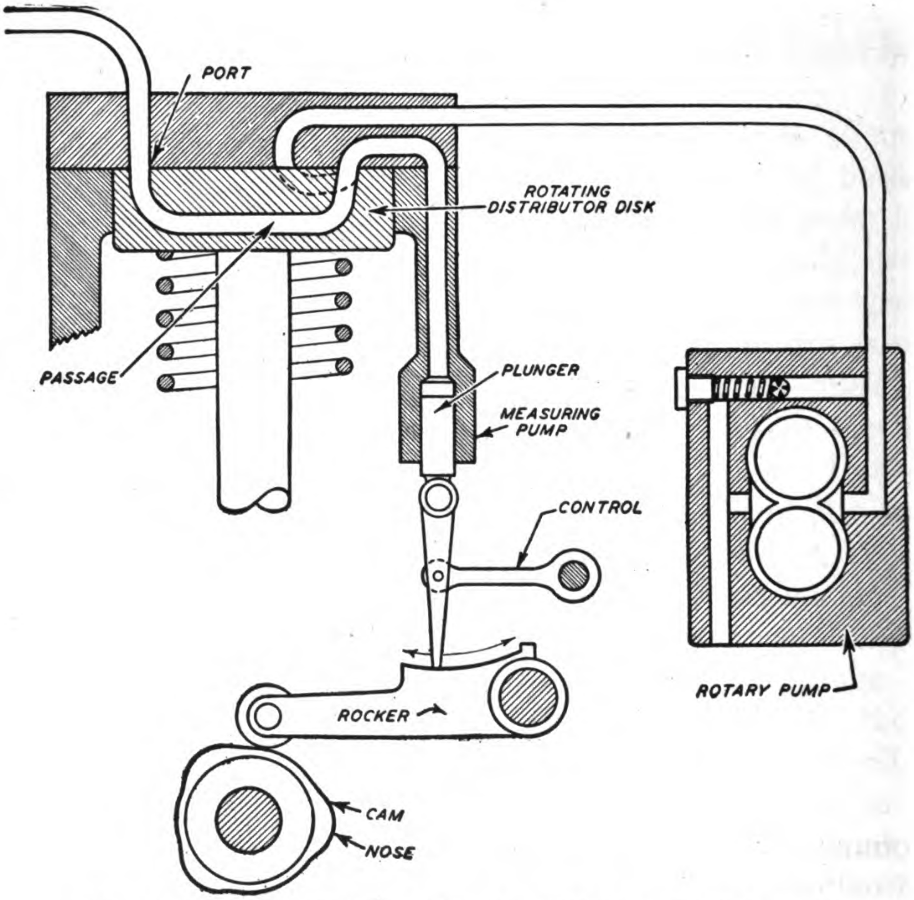

Fig. 7. Fuel Pump Delivered through a Distributor to the Several Engine Cylinders

The design, shown in Fig. 8, is as follows: Fuel usually flows by gravity from the day tank through a duplex strainer to an untimed pressure pump capable of maintaining a working pressure up to 7,000 pounds per square inch. The desired pressure is controlled by a spring loaded regulating valve located in discharge line from the pump. The spring tension determines the pressure and is usually

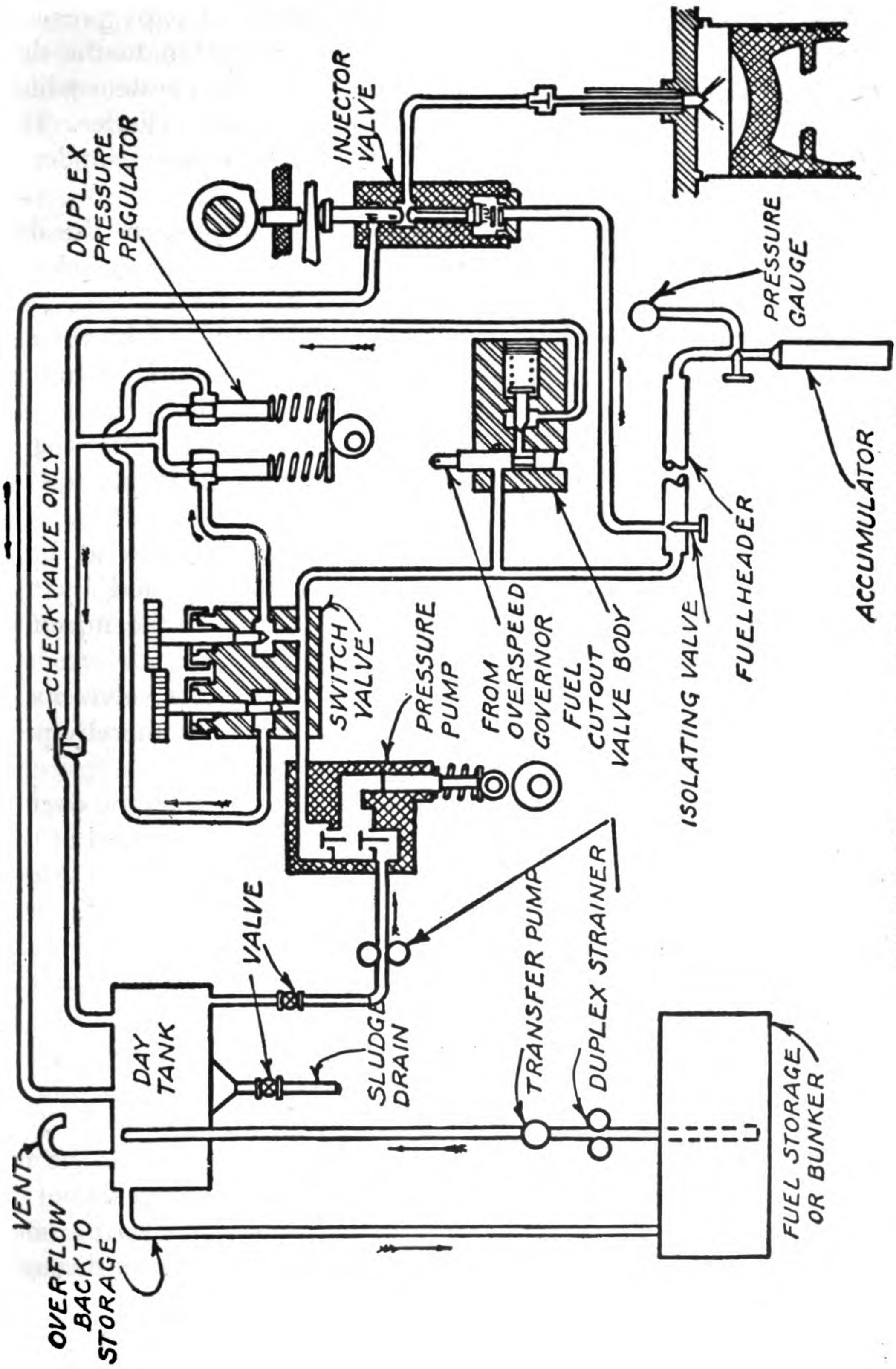

Fig. 8. Fuel-Injection System of Cooper-Bessemer Diesel

changed manually to suit the load or the speed. Excess pressure opens this regulating valve, allowing the fuel to return to the day tank. Fuel at desired pressure goes to the distribution system which consists of an isolating or shut-off valve for each cylinder. The purpose of the isolating valve is to shut fuel off from any cylinder if this is desired for any reason.

Assuming that the isolating valve is open, fuel goes to the distributor or injector valve, which is a poppet valve that remains closed most of the time, opening only at the proper time for injecting fuel into its particular cylinder. This opening is accomplished by a cam. When the cam opens the injector valve, fuel flows through a tubing to the spray nozzle located in the cylinder head. This spray nozzle is equipped with a spring loaded valve that opens and closes at a predetermined pressure, usually set at 1,500 to 2,000 pounds per square inch.

Fuel flows past this valve, then through small holes at high velocity into the combustion chamber, where it is ignited by the heat of compression and continues to burn as long as the injection lasts.

Injection lasts as long as the cam holds the injector valve open, after which the valve in the nozzles also closes snappily, thereby preventing "after drip" of fuel into the combustion chamber.

The amount of fuel entering the cylinder depends upon the engine load and the speed, and it is regulated by the varying duration of the injector valve opening which also varies the valve lift or travel. Moving the control one way decreases the clearance between the tappets and thereby increases the lift of the valve and the injection period. Moving the control in the opposite direction does the reverse and, if moved far enough, it will stop injection.

A close study will disclose that the fuel injector has incorporated in it a patented safety feature, making it impossible to flood a cylinder with fuel in the event that the injector valve leaks at its seat. The fuel injector valve plunger or tappet is drilled lengthwise at its center from the valve end to a point in line with the recess shown in the injector body. Another hole, drilled at right angles to the hole drilled from the valve end, connects with it, making a passage through the plunger in line with the atmospheric relief. The stem of the injector valve is lapped to a seat with the end of the injector plunger so that when the two are brought in contact during injections, the passage through the plunger is sealed. Assume that the injector valve is leaking. The fuel leaking past this valve will pass through the passage in the injector plunger and through connections at the side, which is connected to a header back, preferably by gravity to the sump or storage tank. Therefore, fuel cannot be injected into the cylinder through the leaking of an injector valve, and can only be injected during the injection period. When injection is to start, the lapped end surfaces of the plunger and valve stem again come together, sealing the passage through the plunger.

LUBRICATION OF FUEL PUMPS. Lubrication of the rollers and crossheads is accomplished by splash from the forced-feed to bushings in combined eccentrics and gear as well as from governor oil feeds. A lubricating oil drain is piped from the bottom of the crosshead slide back to the chain housing.

CARE OF FUEL-INJECTION PRESSURE PUMPS. The first requirement for long trouble-free operation is for the fuel to be free from grit or other abrasives.

In an effort to minimize this source of trouble, a fine strainer is installed on the suction side of the pump. This is usually in duplicate to avoid shutdowns for cleaning, and while this strainer will remove particles of solids larger than 0.0035 inch, if smaller abrasives are in suspension, they should be removed either by filters, centrifuging, settling or other means. See that valve springs are not broken.

GRINDING FUEL VALVES. Do not grind fuel valves of the spring-loaded type unless they need it and, when needed, use a good grade of medium or fine grinding compound on the seats only. Care should be taken to prevent the grinding compound from getting into other parts of the pump or system, also to clean out all traces of it when finished. It is best to remove the valves and seat from the rest of the pump for regrinding.

Shoulders on valves should be removed by a grinding machine, if available, or the skillful use of a handstone.

When the seating surface for discharge check becomes too wide, $\frac{1}{16}$ inch or more, it should be reduced by using a square end reamer with a slight radius $\frac{1}{64}$ inch on the corner. The diameter of the reamer should be the same as the bore of the valve cage to act as a guide and prevent the forming of shoulders. The seat in the cage should next be cleaned with a good 45 degree angle reamer, after which a few oscillations of the valve with a fine grinding compound will make a tight seat.

A 1/8 inch lift of valves is sufficient. A greater lift only tends to cause the valves to pound and wear faster.

It is impossible to cover all fuel pumps, but if the student grasps the fundamentals of the pumps discussed, no other pump or spray valve will be difficult to understand and adjust.

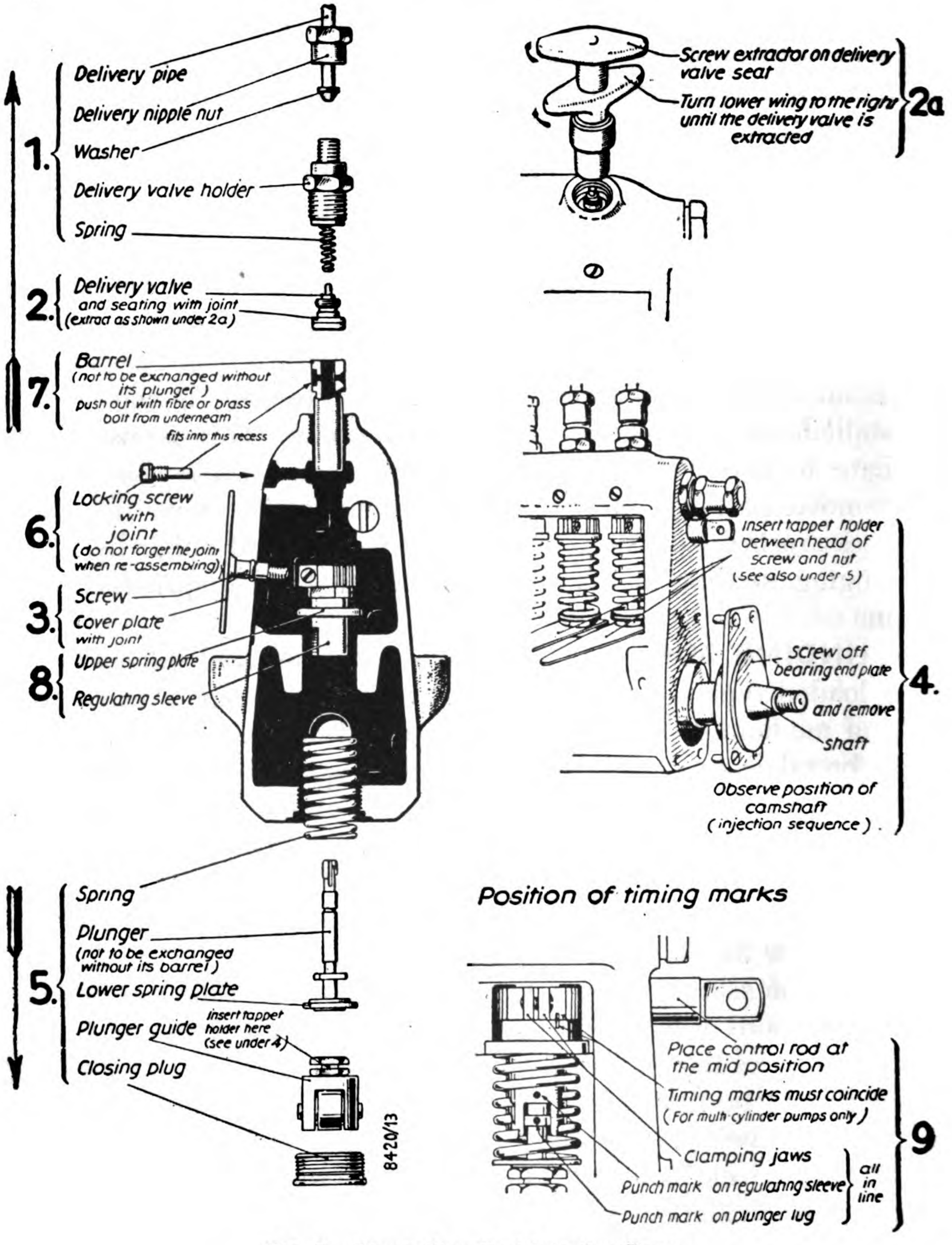

Fig. 9. Dismantling Fuel-Injection Pump

To dismantle a pump remove the parts in the order indicated by the numbers in Fig. 9. The assembling is carried out by reversing the process.

BOSCH INJECTION PUMPS. The Bosch injection pump is employed by over 75 per cent of Diesel builders and the general design is found in 90 per cent of all American high-speed Diesels.

The Bosch pump, Figs. 10 and 11, may embrace all the pump plungers for the several engine cylinders in a single casing, or a separate casing may be employed for each pump plunger. The control of fuel delivered to spray nozzle is by pump-plunger by-pass.

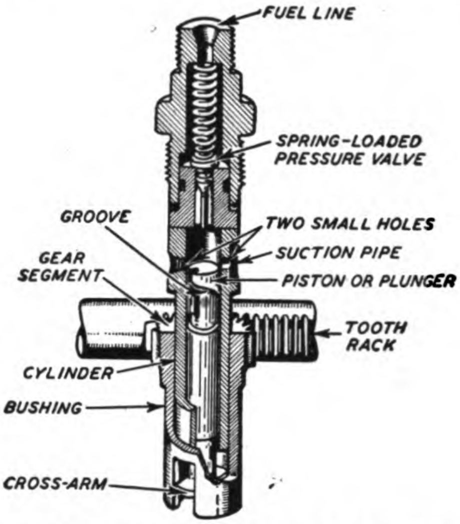

Fig. 10. Diagram of Bosch Fuel Pump

As shown in Fig. 10, each pump element consists of a cylinder and a piston or plunger. The cylinder is closed at its upper end by a spring-loaded pressure valve, from which the fuel line leads to the injection valve.

In the upper part of the housing is a suction space which is connected with the fuel tank by means of the suction pipe. Two small holes connect the suction space with the pressure space in the pump cylinder. The stroke of the plunger is constant. The upper edge of the plunger controls the beginning and the slanted groove controls the end of the fuel delivery. The end of the delivery is reached sooner for a small quantity of fuel than for a large quantity, brought about by turning the pump plunger into various positions.

The pump cylinder is enclosed by a bushing to the upper end of which a gear segment is fastened. This segment, in turn, engages with a toothed rack which is actuated manually or by a governor. The

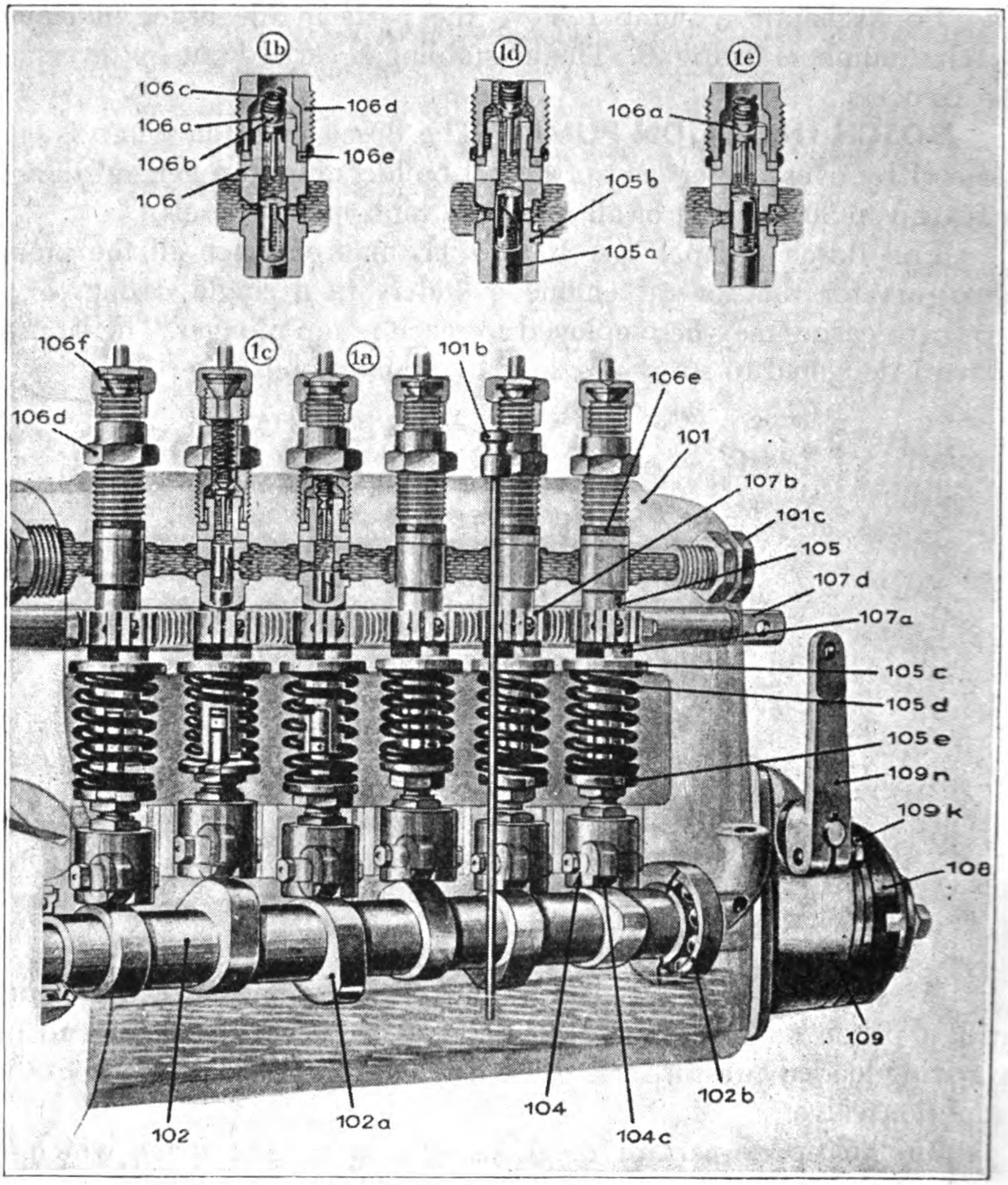

Fig. 11. Bosch Fuel-Injection Pump

101b—Gauge Rod
102 —Cam Shaft
104 —Tappets
104c—Cam Roller
105d—Springs
106 —Seat
106b—Delivery Valve
106c—Spring
106d—Pump Delivery Valve Holder
107b—Toothed Segments
107d—Control Rod

lower end of the bushing has two opposite slots in which a cross-arm of the piston is guided; the angular motion of the bushing, caused by sliding the control rod, being thereby tranmitted to the plunger. No fuel is delivered by the pump when the control rod is at one extreme position; in the opposite position, the maximum quantity of fuel is delivered.

The operation of the pump is shown in detail in Fig. 12. In the lowest position of the piston, the two opposite ports are opened and the cylinder which is above the piston is then filled with fuel.

During the first part of the pressure stroke of the piston, a small quantity of fuel is forced back into the suction space, until the plunger closes both port holes. From then on, the fuel is put under pressure and the pump begins to force it through the check valve and the fuel line into the injection valve.

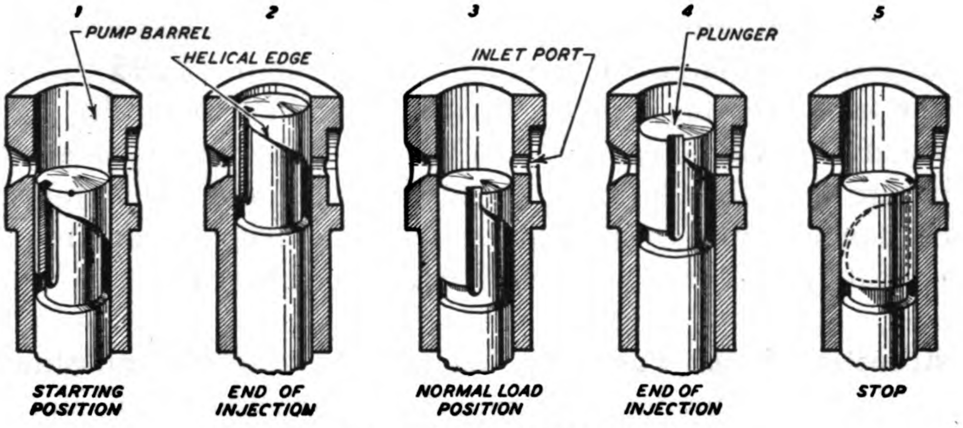

Fig. 12. Action of Bosch Plunger

Delivery begins as soon as the plunger has covered the ports on the way up, and ends as soon as the sloping edge, indicated by the arrow, opens the port hole on the right-hand side and permits the fuel to escape from the pressure space above the plunger, through the groove in the plunger and the port, to the suction space.

In the two views at the left, the plunger is shown in the position for maximum delivery, in which the edge of the helical groove does not open the port hole at all. The next two views 3 and 4, show the position of the plunger for medium delivery of fuel, and the one at the right shows the position when no fuel is being delivered.

The discharge valve has another important task to perform. It is highly desirable to relieve the pressure in the fuel line in order to obtain a rapid closing of the injection valve, as otherwise dripping of fuel from the nozzle into the combustion-chamber may occur. A special construction of the valve provides this pressure relief in an effective and reliable way, as follows:

During the working stroke of the pump, the valve is raised from its seat and the fuel flows through the hollow stem and two connecting holes into a ring groove, and from there to the fuel line. Adjoining the ring groove is a short cylindrical surface forming a shroud, and above this is the valve head. When the by-pass opens, the valve closes. In doing so, the receding valve stem causes an increase in the volume of the fuel line by an amount equal to the volume of the shrouded part of this valve stem. The fuel in the line is in this way suddenly relieved of its pressure, and rapid closing of the injection valve is effected.

A pump, such as that shown in Fig. 10, is operated by reciprocating motion provided for in the design of the engine, from the camshaft or in some other suitable way. Pumps of this sort are made in various sizes, the largest delivering 5400 cu. mm. (3.295 cu. in.) of fuel for each working stroke. The self-contained type, Fig. 12, has a camshaft, individual cams and rollers for each pump element. Such pumps are available in sizes up to that required for a four-cycle engine having 280 cu. in. displacement per cylinder and requiring approximately 260 cu. mm. (0.159 cu. in.) of fuel for each working stroke.

Adjusting Bosch Pump Timing. To facilitate the adjustment of the fuel-injection pump and the timing of the fuel injection, an inspection window, Fig. 13, is provided in the pump casting, through which the mark on the plunger guide should always be visible when the pump plunger is at top dead center of its stroke. The beginning of the injection is indicated when the mark on the plunger guide coincides with the mark on the side of the window. This adjustment is, however, only correct for a certain opening pressure of the nozzle and for a certain speed of the pump. The mark on the plunger guide should coincide with the mark on the side of the window when the engine crankshaft stands at the number of degrees ahead of top dead center as called for by the engine builder's timing data. Top dead center for the engine crankshaft is indicated when a line that is marked on the flywheel comes even with a line that is marked on the end plate. A tappet screw is provided directly under the fuel-injection pump. This screw is held with a locknut. By loosening the locknut, the tappet screw can be adjusted to either raise or lower the line on the fuel-pump plunger guide at the will of the operator. Great care should be exercised when moving this screw to see that the mark on the plunger guide is still visible in the inspection window at both the top and bottom of the pump plunger travel. Serious injury to the pump may result if the pump plunger is raised or lowered too far by the tappet adjusting screw.

Dismantling Pump. In overhauling a Bosch pump, the pump plunger or its barrel should never at any time be touched with a file or other hard tools. Should these parts be damaged, the pump should be sent to the nearest Bosch Branch for attention.

The delivery valve and its seating should also be kept together as a pair always and should never be ground in with grinding powder of any kind, as this will ruin them entirely. If, when they are cleaned and rubbed together, trouble is still experienced, the pair should be replaced from spares.

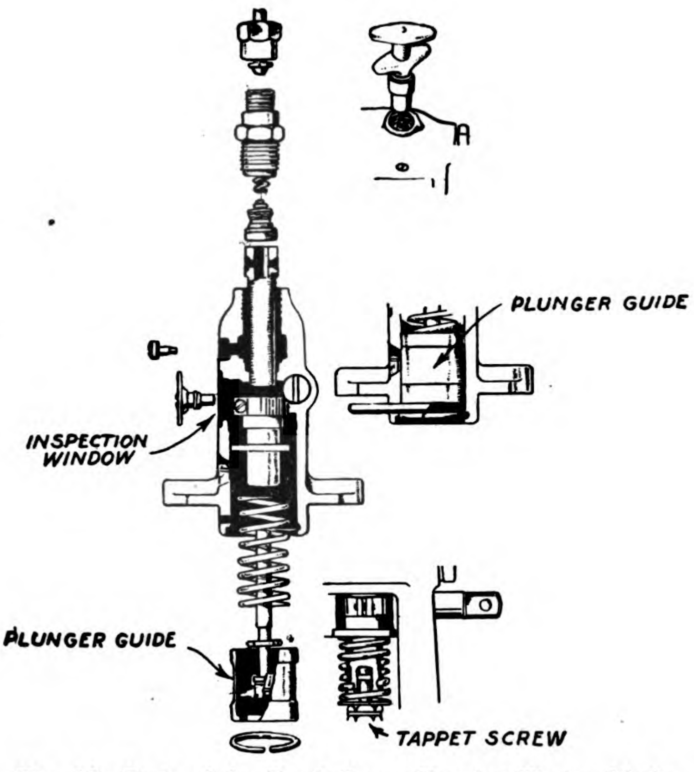

Fig. 13. Parts of the Bosch Pump Showing Timing Marks

If, in multi-cylinder block pumps, it is considered necessary to dismantle the pump-element control sleeves and control rod, these parts must be readjusted together after reassembling with great accuracy to ensure that all pump elements will deliver identical quantities of fuel to all engine cylinders. The procedure of dismantling is shown in Fig. 13, and is as follows:

(1) Push the plunger guide up until a service pin can be inserted into the dowel hole provided in the spigot of the pump

flange, when it will be an easy matter to remove the spring ring. On removing the service pin, the plunger guide, the lower spring, the plunger spring and the plunger can now be easily withdrawn.

(2) Unscrew the delivery-valve holder, withdraw spring and delivery valve. The valve seating and its joint can now be removed by means of a special lifting tool which can be obtained from any Bosch Branch.

(3) To remove the pump barrel, unscrew the locking pin and push the barrel from below by means of a fiber or soft-brass rod.

In reassembling the pumps, great care should be taken that all joints and other parts are entirely clean. This should be (1) rinsed in clean kerosene, (2) allowed to drip, (3) smeared with a little lubricating oil and finally brought together entirely without the use of cotton waste or rags.

In the following notes, the word "pump" should be read to mean each pump element in a multi-cylinder block pump:

(1) Refit the barrel carefully, taking care that the slot in it is opposite the hole for the locking pin. Tighten down the locking pin after making sure that its joint is in place.

(2) Refit valve seating and place it cleanly and securely in position. Place delivery valve and its spring in position. Fit delivery-valve holder with its joint in place and screw down tight.

(3) Insert control rod in mid-position (which is marked with two center punch points). Insert plunger fitted with lower spring plate and spring into pump barrel, taking care that the lug on the lower end of the plunger is fitted into the slot in the control sleeve for which it is marked.

(4) Insert plunger guide and push up until a pin may be fitted through the hole provided in the flange spigot so that the spring ring may be fitted into its groove.

EX-CELL-O FUEL PUMP. As shown in Figs. 14 and 16, the Ex-Cell-O pump employs a "wobble"-plate which is rotated by the shaft which, in turn, is driven by gears from the engine crankshaft. The rotation of the wobble-plate also causes the shoe to move parallel to the shaft axis, that is, moves to the left and down. The motion is transmitted to the rod whose end contacts with the end of the pump plunger. The plunger, when it moves to the right, draws in a charge of oil and on the return, or left, stroke, discharges the oil through the connection to the cylinder spray valve. There is a plunger, rod, and shoe for each engine cylinder.

The Ex-Cell-O fuel-injection pump is in marked contrast to the various classes of fuel-injection pumps shown heretofore, and differs from all other commercial fuel pumps now on the market in that the pump plungers receive their reciprocating motion from the wobble plate and not from cams.

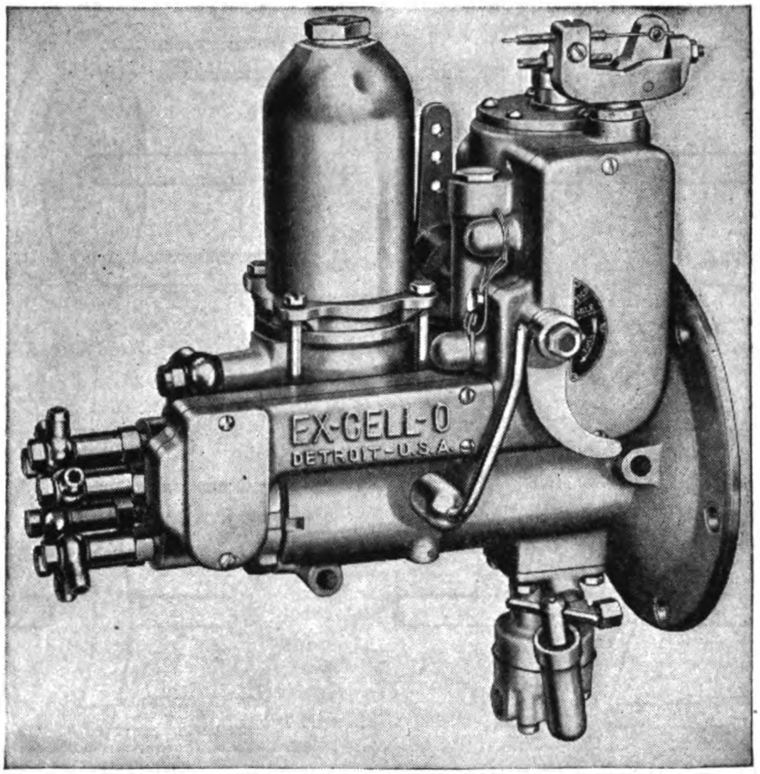

Fig. 14. Showing Ex-Cell-O Fuel Pump Assembled

The Model A Ex-Cell-O pump is shown in Fig. 14. To give the reader a comprehensive idea of how the wobble plate acts, a wobble plate, its rotating shaft and four pistons operated by the wobble plate are shown in Fig. 15 *A* to *D*.

The shaft in Fig. 15 *A* to *D* may be regarded as revolving. A plate is set at an angle with this shaft and is keyed to it. When the shaft revolves, the plate, or disk, also revolves, but since it is set at an angle with the shaft, a spot on the surface of the plate not only rotates but also is displaced horizontally to the right and left. A shoe fastened to the piston, or plunger, rests on the surface of the plate and is prevented from moving except to the left and right while the disk rotates. The rotation of the disk, then, sets up a horizontal motion, to the left and right, of the plunger. When the plunger fits into a pump barrel, this motion of the plunger draws in and discharges oil from the pump barrel.

As shown, only two plungers are grouped about the revolving shaft, but in the Ex-Cell-O pump, either four or six plungers are used,

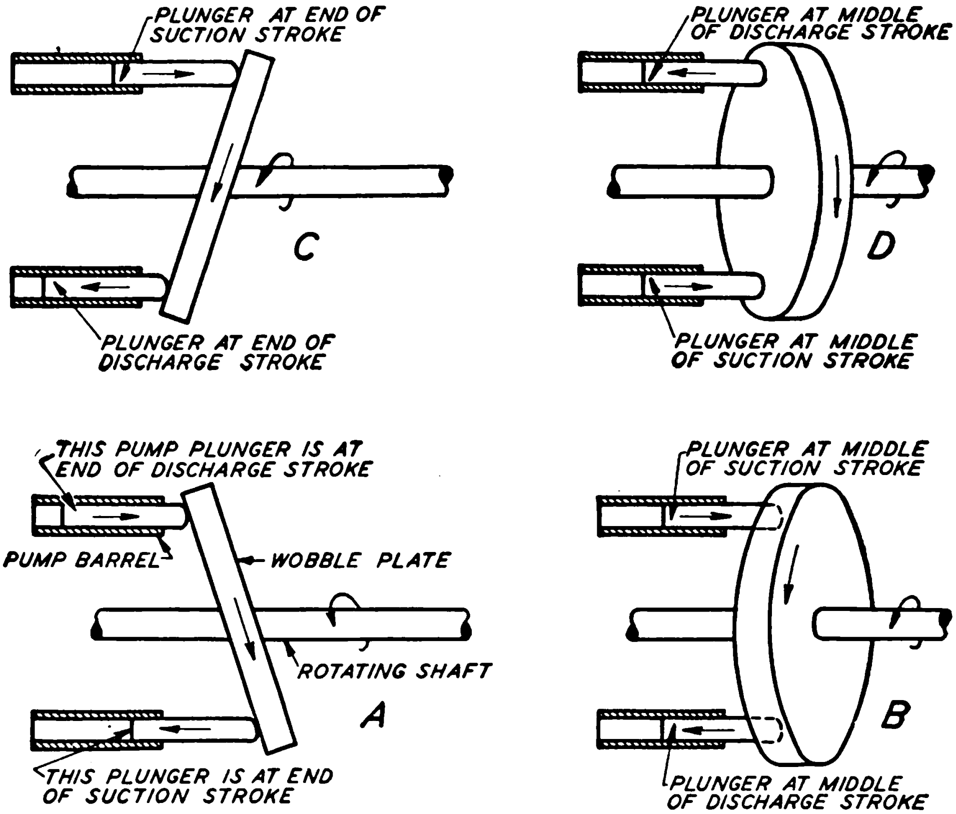

Fig. 15. Action of Wobble Plate Pump

depending upon the number of cylinders of the engine. Each one of the engine cylinders receives oil from one of the pump's barrels.

A cross section of an actual Ex-Cell-O pump is shown in Fig. 16. In this drawing, *A* is the wobble plate which is fastened to the pump shaft *F* which, in turn, is driven through the coupling *I*, and a gear train (not shown) from the engine crankshaft.

The wobble plate *A* has a wearing surface *B* upon which rests the shoes *C*, each having a recess to carry the pushrod *D*. These rods in turn contact with the ends of pump plungers *P*, of which there is one for each engine cylinder. In this manner, the plungers are given a

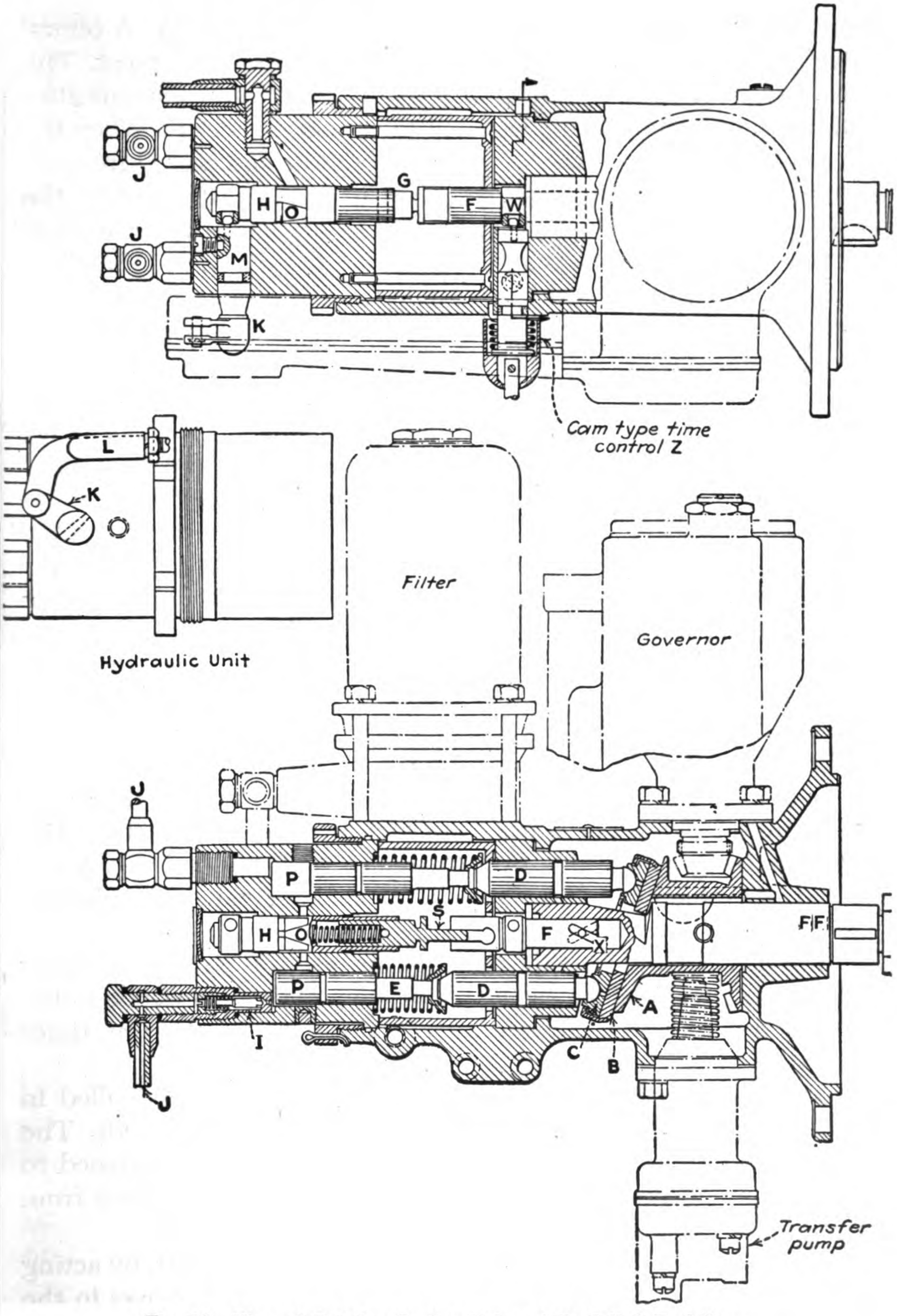

Fig. 16. View of Rotating Suction Valve of Ex-Cell-O Fuel Pump

reciprocating motion by the rotation of the wobble plate *A*. A central valve *H* is rotated by the pump shaft *F* through a bayonet point. This valve has a cut-away section *O* which is brought into communication with the port leading to the barrel of the pump plunger *P*. When this alignment occurs, oil passes through the valve *H* and port *O* from the suction oil line *V*, to charge the pump barrel. The amount of this charge depends upon the time at which the port and valve are open to the flow of oil. The governor acts through a linkage *L*, and shaft arm *K*, which, in turn, moves the valve along its drive shaft, to the left or right. This varies the time that the oil can flow back through the valve *H*, during the plunger's discharge stroke.

Each outlet *J* connects to its respective spray valve in the engine cylinder head. The transfer pump delivers the oil through the filter to the suction line which is shown at the top of the upper drawing.

To allow the governor, acting through the linkage *K* to move the valve *H* to the left or right, thereby controlling the oil entering any particular pump barrel *E*, the shaft *S* connecting the pump shaft *F* and the control valve *H*, has a bayonet joint as shown, so that *S* can slip slightly. The timing of valve *H* may be varied by a cam timer *Z*.

It should be understood that the valve *H* is so timed that port *O* admits oil into a pump barrel while the plunger makes its suction stroke. It also remains open for a short time while the plunger moves to the right, in the delivery stroke. In this way, part of the oil in the particular pump barrel can flow back into the suction line. The governor, by moving valve *H* horizontally while the valve is being rotated, allows more or less of the recess *O* in the valve to be in line with the pump barrel.

If it is desired to have the timing of the valve *H* changed, thereby altering the time at which valve *H* closes the suction connection to the pump barrel while the plunger is on its delivery stroke, a cam timer *W* may be used.

The timer consists of a collar *W* which fits in a recess milled in the shaft *F*. This collar is attached to a cam lever *Z*, Fig. 16. The shaft *F* also has an angular groove *X* in which rests a pin fastened to the extension of the shaft *FF*. In other words, shaft *F* is driven from shaft *FF* by this pin which rests in the angular groove *X*.

If cam lever *Z* is turned, it will force shaft *F* to the left, by acting upon the collar *W* resting in the recess in shaft *F*. If *F* moves to the left, the pin in the angular groove *X* causes *F* to rotate slightly. This

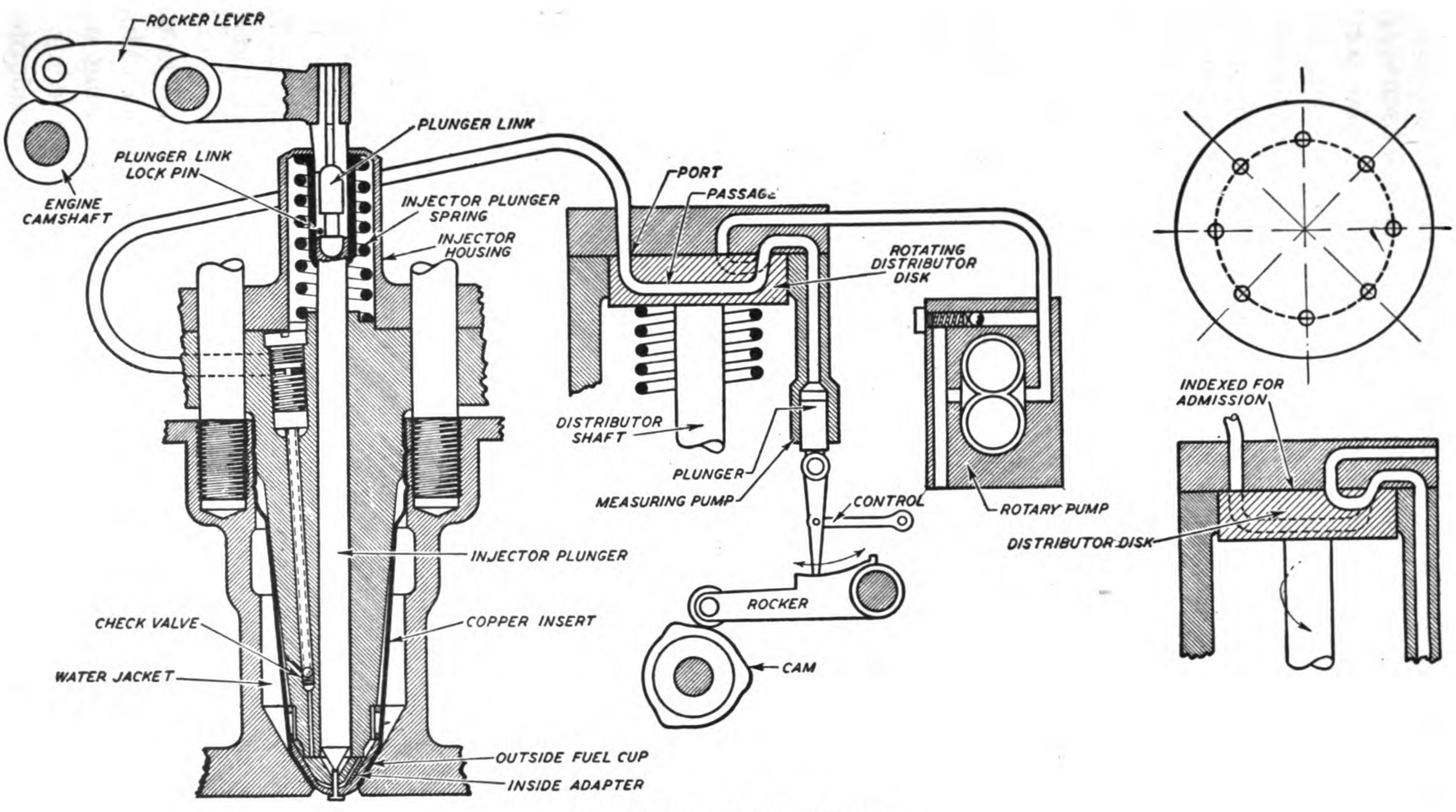

Fig. 17. Cummins Fuel System

angular shift of shaft *F* shifts the bayonet shaft *S* and valve *H*. In this way valve *H* registers with the pump barrel later.

The cam lever *Z* is held in its new position by a set screw, so that the lengthwise position of the shaft *F* is fixed in its new setting or position.

To adjust the cam timing proceed as follows: After running the engine until it has reached normal operating temperature, loosen the check nut so that the time-control cam may be turned until only the concentric hub portion touches the time-control lever. Then idle the engine at the low idling speed which is to be used and bend timing control lever *Z* in the plane of the cam, at a point about one inch above the right angle bend of the lever. Do this with two wrenches or other tools on the lever so as not to put any strains on the timing mechanism inside the pump. The lever should be thus bent until the timing is correct for this low idling speed. This is usually the timing that gives the least smoke and highest speed. Next, run the engine at the maximum desired speed and adjust the cam to give the proper timing at that speed. It is usual for this to be set at the engine plant on a dynamometer at full load. In the absence of such equipment, the timing will not be far off if set at no load at the maximum desired speed for least smoke and highest speed.

The engine can be run at top speed and full load to check for excessive knock which will occur if timing is too far advanced (the time-control lever pushed too far to the left) or loss of power if too far retarded.

Timing of Ex-Cell-O Pump. Timing of the Ex-Cell-O pump is accomplished by shifting the gears connecting it to the engine crankshaft.

CUMMINS FUEL SYSTEM. The fuel-injection system of the Cummins Diesel is radically different from that of any other Diesel. While the fuel pump and the distributor were shown in Fig. 7, a diagram of the entire fuel handling system is shown in Fig. 17, and the pump parts are the same as those which are shown in Fig. 7.

The spray valve, or as the Cummins device is called, the vaporizer is of interest.

The injector is mechanically operated and very simple in design. It consists of a special casting with a properly fitted plunger. Mounted on the end of the interior body is a screw cup containing a small cone-shaped adapter which seats on the end of the injector body. Between the screw cup at the lower end and the cone adapter is a small annular space. A connecting hole to the annular space leads up through the injector body to the fuel line from the pump distributor. This forms a passage from the fuel pump to the annular space in the cup. A series of small holes leads from the annular space to the inner cone and permits the fuel to pass into the injector-plunger chamber. On the intake stroke of the engine, the fuel-metering pump

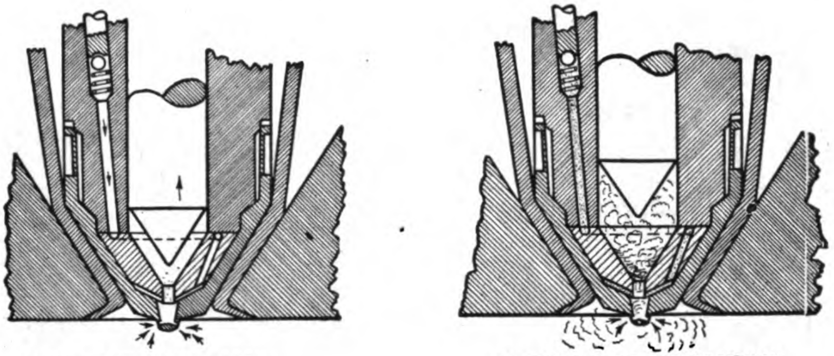

A-FUEL CHECK VALVE OPEN;
PLUNGER MOVING UP AND
FUEL ENTERING CHAMBER

B-PLUNGER AT TOP POSITION;
HOT AIR FROM COMPRESSION
BEING FORCED THROUGH FUEL
CHARGE

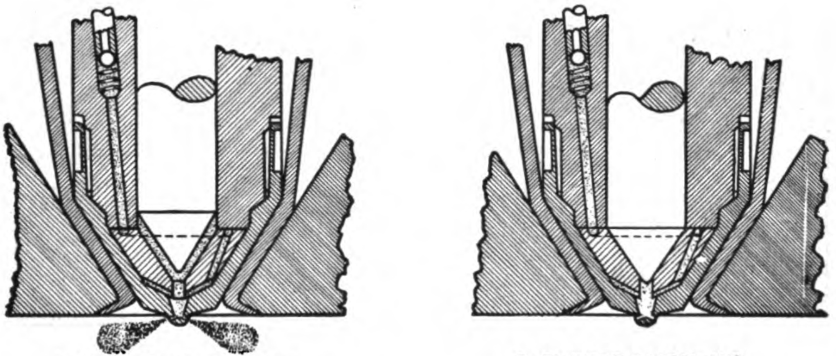

C-PLUNGER MOVING DOWN
DRIVING GASIFIED FUEL CHARGE
INTO COMBUSTION CHAMBER

D-PLUNGER SEATED AND
INJECTION FINISHED

Fig. 18. Action of Cummins Fuel Injector

forces a charge of fuel of the right amount, for the load and speed, to the engine into the annular space between the cup and cone adapter.

The fuel lies in this inner chamber during the compression stroke of the engine, and the heated compressed air is forced through the small spray holes in the screw cup. The oil, being exposed to the heat and blasting of the compressed air, is broken up or gasified. A few degrees before top center, the mechanically operated plunger starts down, and the gasified fuel charge is driven out into the combustion chamber where it burns, clean and completely. A small check valve is located in the lower end of the fuel passage in the injector body. This prevents the compression from blowing the fuel back and filling the lines with air. The action is shown in Fig. 18, where the diagrams outline for phases of fuel injection.

DECO FUEL-INJECTION PUMP. The fuel-injection pump built by Diesel Equipment Corporation is shown in cross section in Fig. 19, and its action is illustrated in Fig. 20 A-D. It should be understood that the pump body is arranged to accommodate as many plungers as there are engine cylinders. The operation of the pump is simple and dependable because it follows the familiar time-proved principle of plunger-and-valve operation.

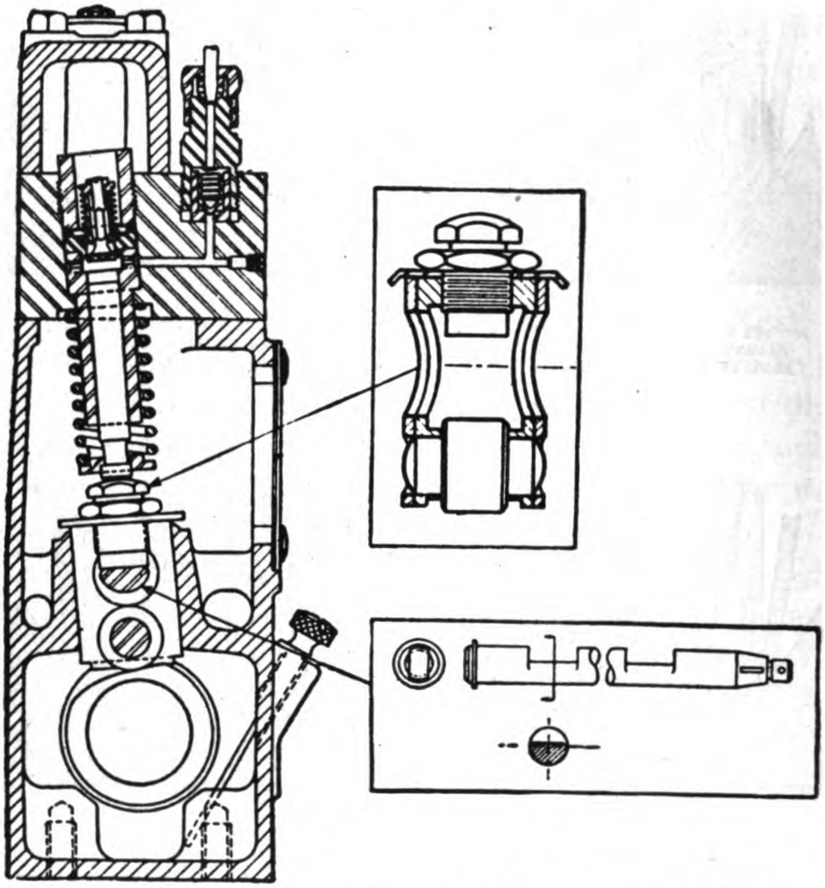

Fig. 19. Section through the Deco Pump Showing Plunger, Valves, and Control

The Deco fuel pump includes an individual pump unit for each engine cylinder. Each pump unit consists of a suction valve, plunger and barrel, discharge, and tappet assembly. The barrel fits securely in the body as shown in Fig. 19. Directly above the barrel is the suction-valve body. The lower portion of the valve body is accurately ground as a valve seat, and the upper portion acts as a guide for the suction valve.

The plunger and barrel, which are located directly beneath the suction-valve assembly, are accurately ground to secure a perfect fit of the plungers in the barrels. The lower end of the plunger is in contact with the tappet adjusting screw located in the upper end of the tappet body assembly. The lower end of the tappet assembly is provided with a roller which engages the camshaft, and the entire tappet assembly is installed with a sliding fit in the pump housing and rests on the flat cross section of the control rod. It is held in place by the heavy plunger spring.

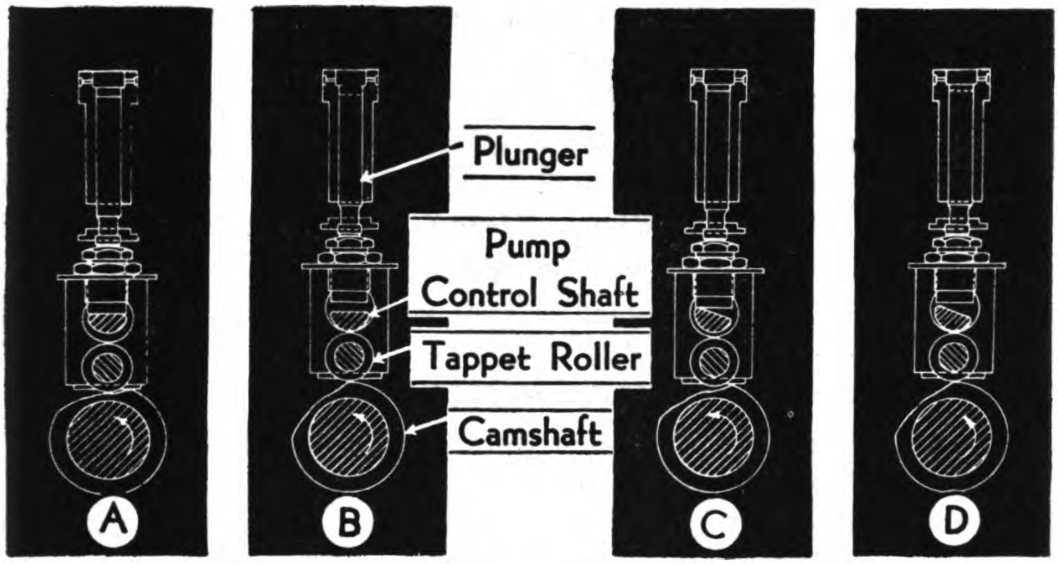

Full Load Part Load

Fig. 20. Action of the Deco Fuel-Injection Pump

The Deco pump operation, shown in Fig. 20 at *A* and *B*, is as follows: When the plunger moves downward toward its low position, it creates a suction at the suction valve and opens the valve, filling the barrel with fuel. When the plunger reaches its lowest position, it remains stationary for a moment, thus relieving the suction, and the spring closes the suction valve before the plunger starts upward. As the plunger starts upward on its delivery stroke, the fuel within the barrel and in the fuel passage is under a pressure of 1350 pounds per sq. in., which lifts the discharge valve. Fuel then flows into the injection line to the injector. The injector line carries the fuel to the spray nozzle located in the cylinder head of the engine through which it is sprayed into the combustion chamber.

When the pump is delivering its full fuel charge, the action is as shown in Fig. 20 at *A* and *B*. It will be seen that the eccentric portion of the control shaft rests in such a position that the pump plunger is able to move down to its lowest position, with the result that the plunger roller follows the contour of the cam, and so makes its maximum suction stroke, and draws in the maximum fuel charge. When the engine is pulling only a part load, the engine speeds up slightly and the governor shifts the control shaft so that the pump plunger no longer meets the flat section of the control shaft but, instead, the edge of the control stops the plunger before the plunger reaches the lowest point of its stroke. As a consequence, the plunger makes a smaller suction stroke and draws less fuel into the barrel. Less fuel, then, is forced out of the pump on the discharge stroke. This action holds the speed at a fairly constant value.

TIMING FUEL PUMPS. The methods of setting the Bosch and other pumps have been outlined. The only other detail is the ascertaining of dead center positions of the crank. These are almost invariably marked on the flywheel or gear wheel.

LOCOMOTIVE FUEL-INJECTION SYSTEMS

In review we have four main systems on locomotives:

(1) The Cooper-Bessemer type.

(2) The Bosch—Nozzle and Pump as separate units; Nozzle and Pump as one unit in head.

(3) The Ex-Cell-O type.

(4) The Cummins Fuel System.

For small locomotive engines, the fuel injection pumps are so small that they can be built all in one unit. On the heavy-duty locomotive engines, the fuel injection pumps are large and therefore are built in separate units as shown in Fig. 21. These units are mounted in such a location as to be operated by a cam shaft. Fig. 21 shows a common method of driving the fuel injection pumps. This is described as follows:

FUEL PUMP DRIVE. The fuel pump is of the constant stroke type, the amount of fuel delivered being measured by a helical groove cut in the pump piston which uncovers a by-pass port in different positions as the piston is rotated axially.

One pump unit is provided for each cylinder, and all of the pumps are driven from a camshaft connected by a train of gears to the engine crankshaft. The cam noses are solid, with a very steep rise which gives

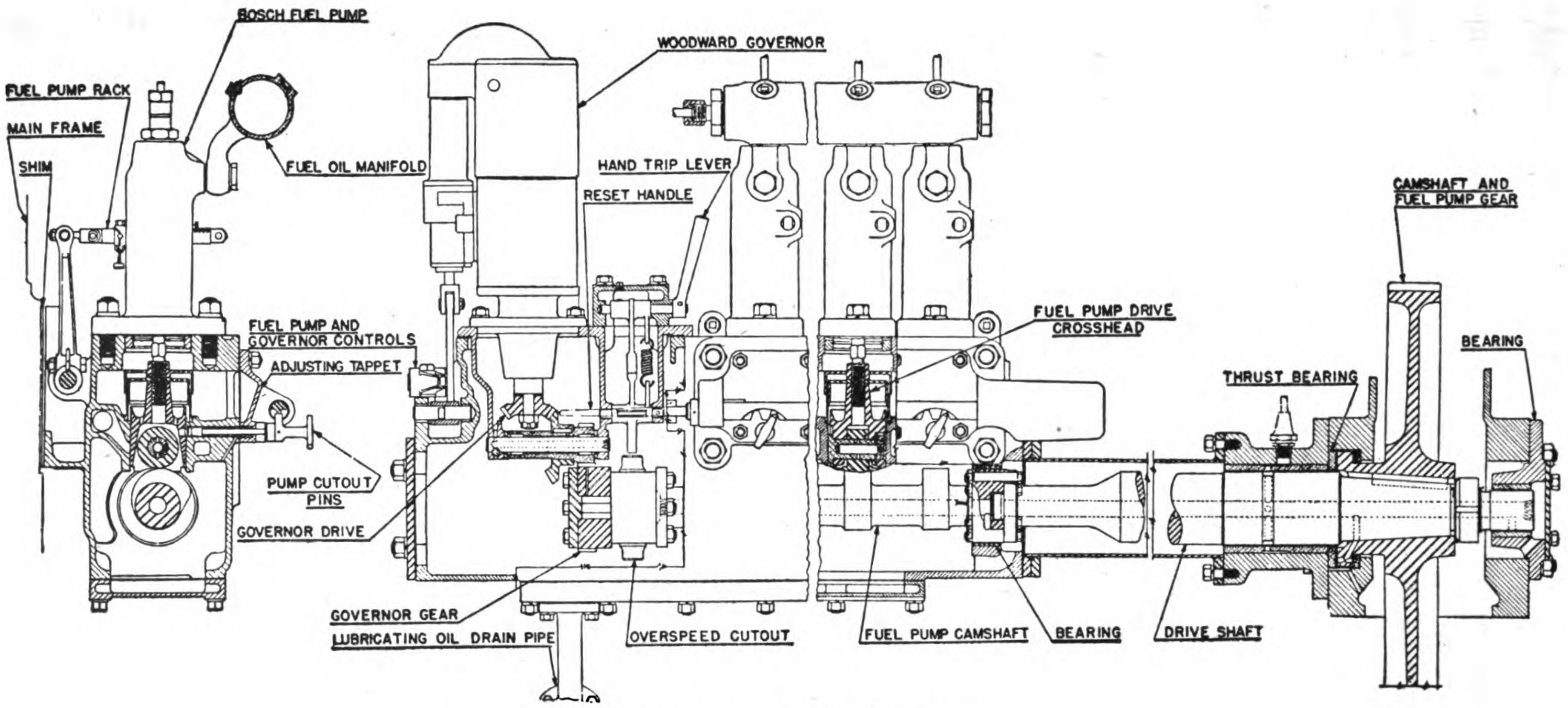

Fig. 21. Fuel Pump and Governor Drive

constant acceleration and increased penetration of fuel injected into the combustion chamber.

A hardened steel roller follows each cam, the rollers being guided by crossheads in the pump housing. The crossheads carry the tappets which drive the pump plungers. The entire fuel pump drive mechanism is force-feed lubricated.

Each pump may be made inoperative by disengaging the cutout plunger from the safety cutout shaft and turning the plunger through 90 degrees. Then this cutout plunger, which is spring loaded, will engage the fuel pump crosshead and lift it off the camshaft. To see if the pump is inoperative, look at the timing window in the side of the pump and note if the spring guide is moving up and down. If it is moving, push in on the cutout plunger until it engages with the hole in the pump crosshead. To make the pump operative, simply reverse the foregoing procedure.

It will be noticed that all of the cutout pins are normally engaged in a safety shaft which is loaded with a heavy spring and will slide forward, moving all the individual pump cutout pins to the cutout position when the emergency stophandle is pushed in toward the engine. This same action takes place automatically on operation of the overspeed governor, which is driven off the fuel pump drive shaft.

DESCRIPTION OF FLOW—ENGINE SYSTEM. (See Fig. 22). Fuel oil is drawn by the motor-driven auxiliary pump from the main tank under the locomotive frame, through the check valve, the emergency trip and duplex strainer to the intake side of the pump. It is forced by the pump up through the filtering unit containing edge type strainers and felt filters located on the side of the Diesel engine and to the fuel oil intake header mounted on the fuel injection pumps. On the other end of the manifold is a return line going back to the fuel tank. A swing check is located in the return line. The manifold or header feeds the fuel pump plungers which force the oil under high pressure to the nozzles. There is one nozzle in each cylinder head.

RELIEF VALVES. There is a 75 lb. sq. in. *Fulflo* relief valve set in the line just ahead of the fuel oil *Cuno* filters. This means that if fuel pressure at this point tends to be in excess of 75 lb. pressure the excess pressure will be relieved and a portion of the fuel returned to the tank. There is a 35 lb. *Fulflo* relief valve located in the return line. The fuel oil pressure gauge is taken from a connection in between the fuel header on the Bosch pumps and the 35 lb. *Fulflo* valve in the return line. The 35 lb. *Fulflo* valve acts to regulate the fuel oil pressure in the manifold to the working pressure. The 75 lb. *Fulflo* valve is provided to relieve any excessive pressure condition.

STRAINER CLOGGING. Fuel should be well filtered before it enters the fuel tank. Otherwise trouble will be experienced with clogging of the system.

The Duplex strainer may clog occasionally on the run and it must be cleaned regularly at inspection periods. Clogging of this strainer will be indicated by the fuel pressure falling off as the engine load is increased. The strainer elements consist of two waste filled copper baskets so arranged that only one is in use at a time. In case of a dirty strainer, throw the lever over to the other strainer and report the dirty one. In the event that both strainers should be dirty, it is a simple matter to remove the cover of one of the strainers and clean out the basket.

FUEL PRESSURE. The fuel pressure should be 30 to 50 pounds. If the fuel pump runs and no fuel pressure at all can be obtained, proceed as follows:

(1) Check to see that the emergency fuel cutout is not tripped. This cutout valve is operated by *red wooden handles* located inside and outside the locomotive. The valve itself is located underneath the frame of the locomotive in the line between the fuel tank and the auxiliary fuel pumps. When the valve stem is up the valve is open. When the valve stem is down, the valve is closed. If the valve is tripped, it is necessary to reset it by pulling up the stem and replacing the latch.

(2) Check to see that there is fuel in the tank.

(3) Check to see that there are no leaks in the suction side of the fuel pump. If the fuel pump packing nut is very loose, no pressure can be obtained.

(4) If the fuel pump will not run, check to see that no fuses are blown in the circuit.

(5) Turning the handles on the fuel oil *Cuno* filters, mounted on the Diesel engine, will clean them. If these filters should start clogging, the fuel oil pressure will show a drop when the engine is worked hard.

(6) Improper adjustment or sticking of the 35 lb. relief valve will cause improper fuel pressure. The pressure should be 30 to 50 lbs. If the 75 lb. relief valve should stick open, fuel pressure will be low.

If a delivery pipe should break between the Bosch fuel pump and the fuel nozzle located in the cylinder head, the cylinder with the broken pipe should be cut out immediately. If the delivery pipe should break inside the rocker box, fuel oil will be mixed with lubricating oil, resulting in lubricating oil dilution. In case of crankcase oil dilution, the Diesel engine should be shut down and not operated until oil can be changed. Crankcase oil dilution can be detected by lowered lube oil pressure or by a rising of the crankcase oil level as shown on the bayonet gauge.

FUEL DRAINS FROM DIESEL ENGINE. As shown in Fig. 22. a drain pipe is connected to each of the injection nozzles and carries fuel oil back to the tank. This pipe handles leakage which goes by the needle plunger in the nozzle. Normally several drops a minute will come from each nozzle through these pipes. If the fuel leaks out in a steady stream it should be reported.

A drain pipe from in back of the fuel pump drive shaft housing carries fuel oil back to the tank. This pipe carries away fuel oil which has leaked past the injection pump plungers and down over the fuel pump drive crossheads inside the housing.

CONTROL OF FUEL ENTERING ENGINE. The amount of fuel entering the Diesel engine cylinders is controlled first by the engineer's throttle. Opening the throttle acts to energize various air magnet valves on the throttle operator. The throttle operator acts through a system of levers to compress the spring in the Woodward governor. This raises the speed setting of the governor. The governor will then actuate the control rods of the injection pumps to turn their plungers and admit more fuel to the nozzles and Diesel engine cylinders.

GOVERNOR DUMP VALVE (ENGINE SHUT DOWN). A magnet operated dump valve is incorporated in the Woodward governor construction. If the magnet coil is energized, the valve will stay closed. If the circuit to the magnet coil is opened in any manner, the valve will open and allow governor oil to pass from the bottom of the power piston to the top of the power piston. This will force the piston down. The injection pump control rods will then be forced in and the Diesel engine will shut down. The magnet coil is connected electrically with the fuel pump buttons and the lubricating oil 20 lb. low pressure switch. If circuit is broken, engine stops.

THROTTLE OPERATING MECHANISM. The throttle operating mechanism is controlled both electrically and pneumatically. If the air is shut off or the electrical circuit is broken, the mechanism will not act to compress the governor spring and admit more fuel to the Diesel engine. Thus the engine will not operate at any speed except idling.

The air control is managed through the *EV* magnet valve. The magnet coil of this valve must be energized to open the line and admit air to the mechanism. Otherwise the engine will not run above idling speed.

DETECTING A CYLINDER NOT FIRING. If a Diesel engine cylinder is not receiving fuel or is not firing, its exhaust pipe elbow will be very cold as compared to the exhaust pipe elbows on the other cylinders. Cut out the cylinder causing the trouble and proceed. It is permissible to operate a Diesel engine at full speed with one cylinder cut out.

HOT CYLINDER. If a Diesel engine cylinder is receiving an excessive amount of fuel due to faulty injection or if an exhaust valve is leaking badly, the exhaust pipe elbow of the faulty cylinder may become red hot. If such should occur, cut out the cylinder causing the trouble and proceed.

DESCRIPTION OF FLOW—BOILER SYSTEM. Fuel is taken from the main fuel tank of the locomotive and is drawn back to the boiler by the electric motor-driven fuel pump on the boiler. From the fuel pump oil is forced up to the fuel manifold and then through the fuel and water metering valve. From the metering valve it goes to the fuel solenoid valve and then to the boiler firepot through the fuel spray head.

A relief valve, a by-pass valve, and a metering key are located in the fuel manifold to control the pressure and by-pass a portion of the fuel back to the tank. Filters are located in the system at various points as shown in Fig. 22.

NOZZLE TESTING OUTFIT. (See Fig. 23.) To meet the demand of operators for a device which will accurately check the opening pressure of injection nozzles, the American Locomotive Co., and others have designed such an outfit. The device is designed to utilize the operator's spare pump to develop the injection pressure.

If the engine is to operate smoothly, economically and with a clear exhaust, the nozzles must be in perfect condition. To keep them so, it is advisable to have a nozzle testing outfit. In the tester the holes should show even sprays, finely atomized. Many nozzles will give a loud squeaking sound (known as chattering) as the spray is forced through the holes on the nozzle tip. This is normal. As stated before, this spray should be sharply cut off. If there is any dribble the nozzle should be returned to the manufacturer for reconditioning.

To check the opening pressure of a nozzle assembly, the operator

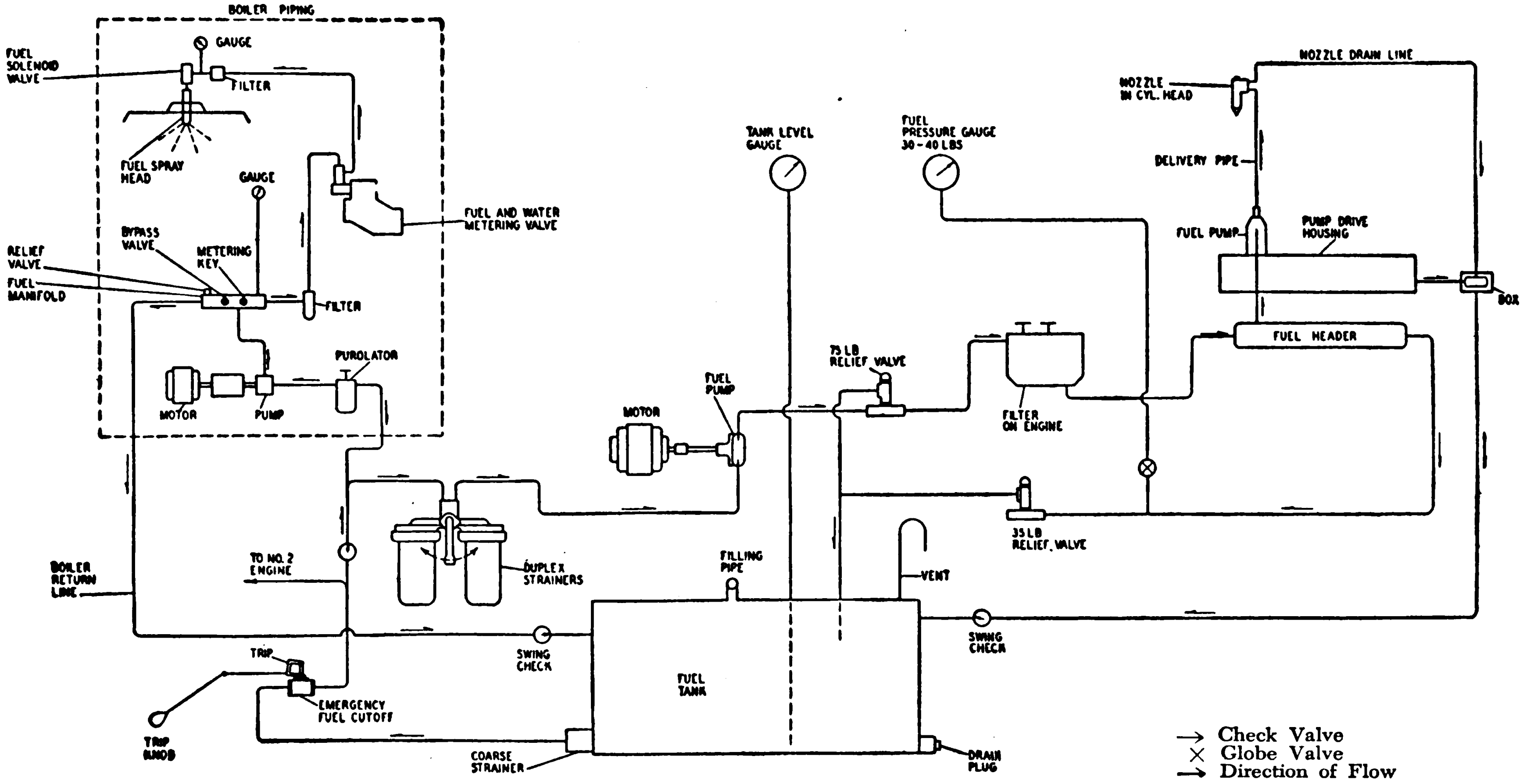

Fig. 22. Fuel Oil System—One Engine and Boiler

attaches it securely to the injection tube on the test rack. The fuel pump rack should be set at 20 mm. travel. Test the nozzle by pumping the lever steadily until fuel discharges at the nozzle. At the same time note the pressure indicated on the gauge. The maximum pressure noted on the gauge at each stroke is the opening pressure of the nozzle.

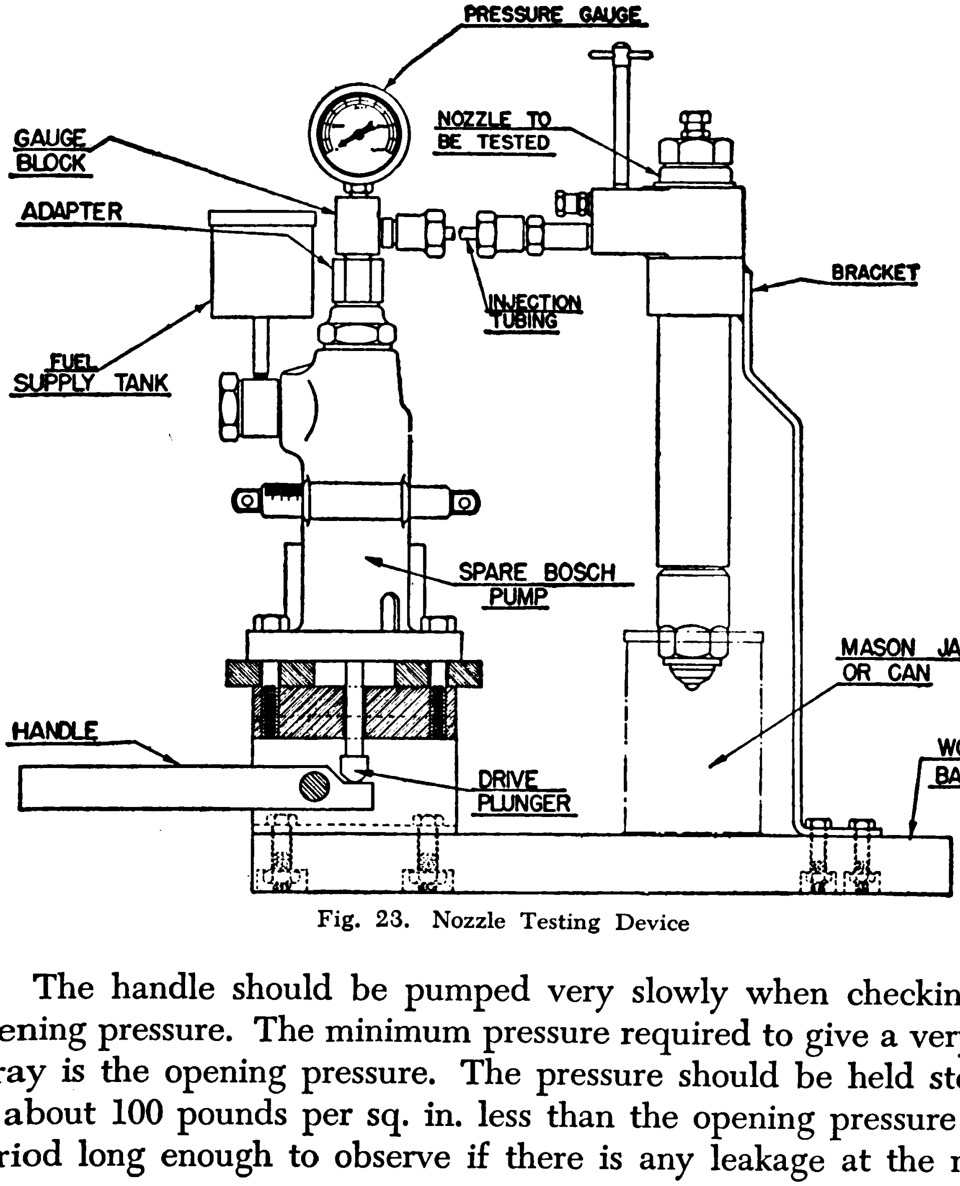

Fig. 23. Nozzle Testing Device

The handle should be pumped very slowly when checking the opening pressure. The minimum pressure required to give a very tiny spray is the opening pressure. The pressure should be held steadily at about 100 pounds per sq. in. less than the opening pressure for a period long enough to observe if there is any leakage at the nozzle seat.

Note: Do not operate the lever quickly as this will cause extremely high pressure to be built up giving an unreliable gauge reading. Check the pressure to the adjustment sheet and readjust the nozzle if necessary. The adjustment is made by turning the pressure adjusting screw on top of the nozzle holder. This should be turned slightly in the necessary direction and the new setting tested. Proceed in this manner until the correct setting is reached.

After the nozzle assembly has been set at the proper opening pressure (3600 pounds), set the fuel pump rack at the limit of its travel or approximately 50 mm. and operate the test rig to see if the nozzle operates properly. Also, check to see if there is any after dribble. If any faults are detected, the nozzle should be inspected and the defect remedied. Instructions concerning repair work on injection nozzles are given in the paragraphs preceding this description.

Chapter 11

Lubrication and Cooling Systems

LUBRICATION

The subject of lubrication is probably the most vital of all the details of a Diesel power plant. Poor lubricating oils and incorrect application of good oils are the causes of much of the trouble experienced in the operation of an engine. No engineer can afford to be indifferent to this matter.

GOOD OIL. One would indeed be a brave man if he ventured to lay down a specification of a good oil. An oil excellent in one design of engine operating under a specific set of conditions might be injurious when applied to an engine of a different design operating under distinctly different conditions.

Basically, the oil marketer is willing to outline various physical characteristics his oil possesses. Some of these are important—most of them are of no significance.

VISCOSITY. Viscosity is indicative of relative fluidity; as such it is a measure of fluid friction or the resistance which particles or molecules of an oil will offer to one another when the main body of oil is in motion, as in a circulating system. Heavier or more sluggish oils are indicated by higher viscosity readings. As the relative fluidity decreases the internal or molecular friction will normally increase. For some types of Diesel service, heavier oils are quite necessary, as, for example, when cylinders are to be lubricated apart from the bearings by means of a mechanical force-feed lubricator. Oils such as *bright stock* will have a viscosity of at least 150 seconds at 210° F. and as high as 3,000 seconds at 100° F. and are suitable for cylinder lubrication in such engines. The relatively high operating temperatures of the cylinder walls will cause such oils to become amply fluid, with the result that the possibility of unnecessary power consumption, due to abnormal fluid friction, will be reduced. Place a similar oil in the crankcase, however, and it may result in a considerable increase in power consumption, and possibly higher bearing temperatures, by reason of its resistance to flow through the bearing clearance and the load it may impose upon the pump. For this and other reasons, a crankcase oil should have a viscosity of from 500 to 800 seconds at 100° F.

The Diesel operator should, therefore, understand the meaning of viscosity, its value as an indication of an oil's ability to function effectively in his engine, and the means by which this property is customarily determined. He can then check up any particular oil with the specific requirements of his engine, as established by the builder. The laboratory determination of this property is made by observing the time required for a measured quantity of oil to flow through a standardized orifice at some fixed temperature.

The Saybolt Universal Viscosimeter is standard for such observations in the majority of laboratories. The viscosity of Diesel crankcase lubricants is normally run at 100° F. Oils for cylinder lubrication, however, are frequently run at both 100° and 210° F., to facilitate drawing a viscosity-temperature curve with which to estimate the probable operating viscosity at crankcase of cylinder-wall temperatures. Viscosity is spoken of in terms of time, or, in other words, the number of seconds which are required for 60 cubic centimeters of the oil to flow through the viscosimeter orifice at a designated temperature.

CARBON RESIDUE. It is important to remember, however, that viscosity is not an indication of quality. For this reason, the Diesel operator must study the carbon residue-forming characteristics of his oil. Development of an excess of carbon residue will normally be a hindrance to attainment of maximum engine efficiency, in view of the tendency which such matter, as indicated by the carbon residue test, will have to deposit around rings, on valve seats, piston heads and in the combustion chamber.

Carbon formation in the Diesel engine, air compressor or any other type of high-temperature service is the result of chemical change. When we consider that the average petroleum lubricant contains from 83 to 87 per cent of carbon by weight, and from 11 to 14 per cent hydrogen, its true hydrocarbon nature can be readily appreciated. In this connection, one must remember that carbon is approximately twelve times as heavy as hydrogen. As a result, even though the above weight percentages may seem to indicate an abnormal predominance of carbon, from a volume angle the composition of certain types of hydrocarbons will be in favor of hydrogen. Normally, any such oil will contain but very small quantities of any other element such as sulphur, oxygen or nitrogen.

In lubricating oils the carbon and hydrogen are bound together in a wide variety of hydrocarbon combinations of varying volatility and stability. The process of refining removes the lighter and more volatile fractions, as well as those unstable components which would otherwise impair the lubricating ability of the oil when used in an engine.

The ideal is, of course, to produce stable lubricants over a comparatively wide range of viscosity, which will be so carefully refined as to be highly resistant to chemical change and deposition of free carbon, when subjected to high temperatures. The manufacture of Diesel engine lubricating oils has been studied most carefully from this viewpoint.

It is, of course, impossible to eliminate entirely the formation of carbon residues, for all petroleum oils will develop volatile products and carbon deposits when exposed to temperatures considerably above the flash point for any length of time. Furthermore, where oils have been subjected to the same degree of refinement, more carbon will result from those which remain in the engine or compressor cylinder or on the discharge valves the longest. For this reason, a more volatile oil of low carbon content may prove the most economical, even though consumption may be somewhat high.

Incompletely refined oils of comparatively low volatility may tend to form gummy deposits, through slow distillation, which will gather any abrasive dust or metallic particles which may lead to hard accumulations which may seriously affect engine efficiency. The ideal Diesel lubricant should, therefore, show a narrow range of distillation, low carbon residue by the Conradson method of test, and not too high a viscosity. Otherwise, instead of vaporizing cleanly, it may undergo chemical change and develop a gummy texture which will tend to collect any dust carried by the air. The amount of residual matter which may ultimately develop will vary directly with the volume of the oil which is exposed to engine temperatures, and its stability.

Carbonaceous deposits are poor conductors of heat. As a result, when they accumulate in cylinders or around piston rings, they may become heated considerably above the temperature of the cylinder walls. If abnormal in volume, they may develop into a decided hazard, due to the possibility of actual structural failure of certain parts of the engine through uneven heat transfer. Long before this, however, residual accumulations on the valves, valve seats, around piston rings or in the ends of the cylinders, may cause valves to leak, scoring of cylinders, wear of rings and loss of power due to improper ring and valve action.

Straight distilled mineral oils, when properly refined, will normally show the least tendency toward direct carbonization and the development of residual carbonaceous matter. For this reason, they are widely regarded as best suited to Diesel engine service. The fact that they are composed entirely of distilled fractions is also assurance that any such carbon as may be formed through excessive use of such oils will normally be easily removable.

POUR TEST. The pour test of a Diesel engine lubricating oil requires consideration wherever the engine must be handled under comparatively low temperature conditions and subjected to intermittent operation. This test is also of importance where ease of handling of oil from storage or external lubricating devices in cold weather may be a factor, by reason of its value as a guide as to the lowest temperature at which the oil will pour or flow to pump suctions. It should, therefore, be carefully noted when the oil is to be delivered to cylinders by means of a mechanical force-feed lubricator. Cylinder oil or bright-stock grade may have a pour point of from 30° to 55° F. Pour point is the temperature at which an oil refuses to flow when the test tube is placed at 135 degrees from the horizontal.

It is obvious that an oil should have no tendency to congeal either in the lubricator or in the crankcase during stand-by periods; otherwise, the pumping mechanism may fail to handle the oil, resulting in lack of lubrication, scoring of cylinders and bearing troubles. For in certain types of petroleum, low pour test is a natural property. The derivatives of other types of crudes, in turn, will carry a comparatively high wax content, and they must be subjected to a dewaxing process in order to obtain low pour test in the finished lubricating stocks. The former are widely regarded as being admirably adapted to Diesel service, especially since they will frequently show a considerably lower carbon residue by the Conradson method of test, when compared with dewaxed or high pour test lubricants of the same viscosity.

FLASH POINT. The extent to which the flash point is an indication of lubricating ability of a Diesel engine oil is frequently misunderstood. Normally it is of but little value as a guide to the nature of the lubricating film which will be formed. Flash is that temperature at which the oil vapor above the oil will flash when a light is applied.

To the chemist the flash point is an indication of relative initial volatility. It is not, however, indicative of the boiling point or the temperature at which a petroleum oil will pass from the liquid to the vapor stage. It is, usually, merely that oil temperature at which sufficient surface oil-vapor is developed to ignite momentarily when exposed to an open flame. The minimum temperature should be from 350° to 375° F. It is arbitrary and dependent upon the type of instrument used for testing. Where an open cup is used, the flash-point temperature will normally be higher than will be observed when the same oil is heated in a closed cup. The open cup is chiefly used in the United States in the testing of Diesel engine oils.

In actual service it is advantageous to use oils which will burn cleanly and leave as little carbon residue as possible, for a certain amount of lubricating oil on the upper portions of the cylinder walls must burn when exposed to the gases of combustion during the power stroke. At this time the temperature to which the lubricating film is exposed will be far above the flash point of the latter. Obviously, there is little or no advantage in insisting upon high flash point as a specification, for some oil must be burned periodically from the upper parts of the cylinder walls. It is far better that this occur at a lower temperature, to greater completion, with as little resultant carbon residue as possible.

OXIDATION. Oxidation and sludge formation in the crankcase or elsewhere in the lubricating system of a Diesel engine is objectionable, due to the possibility of interference with oil flow and impairment of lubrication in those parts where sludge accumulation may have occurred. All petroleum oils will have a certain tendency to become oxidized in the presence of oxygen, which makes up over 20 per cent of the atmospheric air. Certain types, according to the degree of refinement, will show this tendency more than others, especially when they are exposed to oxidizing conditions under higher temperatures. This is commonly believed to be due to the presence of readily oxidizable components. As these latter become oxidized, they develop a gummy or resinous type of material which is relatively insoluble in oil and which may have a marked tendency to accumulate in certain parts of the engine lubricating system, thus preventing free circulation of the oil.

Whenever blow-by of fuel gases or residual matter may occur, sludge of this nature is considered to originate more generally from the fuel than from the lubricating oil. If the condition or fit of the piston rings with respect to the surface of the liners is such as to allow blow-by, a great deal of unburned fuel and soot will work down into the crankcase of a trunk-type engine. This can be expected whenever the engine is smoking. Under such conditions soot from this smoke will tend to be thrown out and rendered capable of working down past the rings, even if there is no direct blow-by. Under high pressures, it is difficult and almost impossible to overcome this tendency. As a result, we must not conclude that, because there is evidence of sludge in the lubricating oil, the latter has been oxidized and is breaking down; for more frequently it will be coming from the fuel as a product of incomplete combustion.

To prevent undue sludging of lubricating oils under normal operating conditions, every effort is made today to remove those materials which have the greatest tendency towards oxidation. The extent to which sludge formation may occur cannot be predicted by any of the usual physical tests which comprise the average oil specification. Careful chemical study is necessary, using means to separate those oxidizable components which may be present in the oil. Normally such studies are made by the reputable refiner of high-grade lubricating oils when determining the adaptability of his crude-oil stocks to the manufacture of products such as Diesel engine oils, which he knows in advance must be as resistant as possible to oxidation. All mineral oils are susceptible to this reaction, when diluted with water under high temperatures and in the presence of air and metallic particles. Obviously, any or all of these conditions may be quite normal.

There is evidence, furthermore, that these conditions may be so contingent upon each other that it is difficult to isolate any one as being the most objectionable. In average engine service they will all be present, and must, therefore, be considered jointly. Where any particular factor, such as entry or condensation of water, or development of higher operating temperatures, can be corrected, it is reasonable to expect that the tendency toward oxidation of the oil will be reduced. This is strictly a problem of operation, however, and one quite beyond the control of the lubricant manufacturer.

By reason of the importance of being able to predict the possibility of oxidation and sludge formation, and to aid the operator in selecting a lubricating oil which will give the most satisfactory service, there is a wide activity in the study of practicable methods of laboratory observation which will evaluate an oil in terms of service requirements. Unfortunately, certain of the most widely known methods still require study in this regard. There is an indication that the more recent methods of tar and gum determination will become valuable in laboratory study of oxidation, as an aid to the refiner's efforts to improve the stability of his lubricants.

The earlier stages of oxidation in a lubricating oil will normally be indicated by emulsification, where water is present. An emulsion is a mixture of oil and water which refuses to separate into its components, oil and water. When it is practicable to keep such emulsions in temporary form, ultimate sludge development can be materially reduced. Unfortunately, under continued exposure to oxidizing conditions, permanent emulsions and insoluble sludges may result. Means of oil purification are available which will effectively remove a certain amount of such material, especially where it is more or less bonded together with metallic particles. The oil filter or purifier is also advantageous in reducing water accumulation in the engine crankcase. As a result, where a highly refined Diesel lubricant is used in an engine which is so designed as to enable proper circulation of the oil without undue possibility of overheating, and where the oil can be readily treated or reconditioned, sludge formation need not be regarded as an alarming detriment.

DIRT. There should, of course, be no dirt in the supply of lubricating oil. In spite of this obvious truth, in a considerable percentage of existing Diesel plants open oil barrels are found. Dirt, of course, is bound to settle in the oil. The objection to dirt is that it is likely to settle in oil lines, stopping the flow to a vital bearing. In addition, the dirt may consist of sharp, though minute sand particles; these particles will cut journals.

CARBON. The carbon in lubricating oil indicates that the refinery filtration is indifferent. This carbon settles in the ring grooves, uniting with the oil to form a gummy, pasty mass which sticks the rings fast in the grooves. Carbon also settles on the surface of bearings, gradually interfering with the flow of oil. It is considered an indication of the oil's tendency to sludge.

FILTERS. A filter must be in the line ahead of the fuel-injection pump; otherwise dirt will damage the pump plungers.

Two types of filters are found on high-speed Diesels, the "edge-type" and the "cloth-type"; both have favorable points and engine builders employ both.

One edge type filter is shown in Fig. 1. This filter is made up of a series of disks which are piled upon a central tube, and inserted in the filter case.

Oil enters the filter case and flows between the disks to the central tube and, then, out the outlet line. The space between the disks is exceedingly small, about 0.0003 inch, so dirt cannot pass but is stopped at the outer rim of the disk. To clean this filter, the set of disks is rotated by the handle lever at the top. In rotating, the disks rub against a scraper, which removes all the dirt resting around the outer edges of the disks.

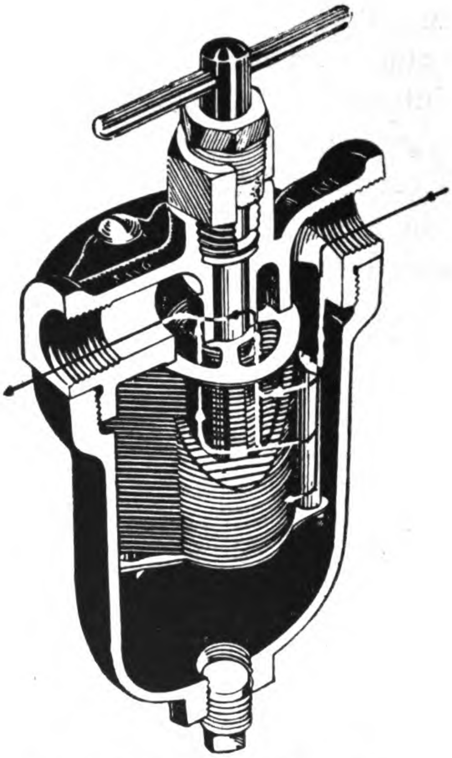

Fig. 1. Cuno Auto-Klean Filter

The bag-type filter, Fig. 2, is simply a bag of close-mesh fibre. The bag should be of woolen yarn because cotton bags may allow the oil to pick up lint. These bags are cleaned by removing them and giving them a bath in kerosene.

Some engine builders use two filters, the first is an edge-type, with the woolen-bag filter between it and the injection pump.

Operators must clean the filters at stated periods. Otherwise, the collected dirt will stop up the filter and the transfer pump will build up a pressure in the oil line sufficient to wreck the filter.

LUBRICATING OIL SYSTEM. Description of Flow. (See Fig. 3.) Lubricating oil is drawn from the engine base or sump by a gear type pump located inside the air compressor crankcase and chain driven off the compressor crankshaft. Oil is forced by the pump through the three waste packed filters connected in parallel. The filtered oil flows to the top and through the oil cooling radiators, then to the *Cuno* filters and finally to the oil header inside the Diesel engine. It is distributed to the Diesel engine bearings, wrist pins, valve mechanism, gears, etc., from the oil header.

Oil Filters. The waste packed oil filters are provided to remove fine impurities from the oil, such as suspended carbon. The *Cuno* filters, consisting of a stack of closely packed thin disks, function to remove coarser impurities and particles of dirt from the oil just before it enters the engine. The handles on the *Cuno* filters should be rotated two complete turns frequently to clean and prevent them from clogging.

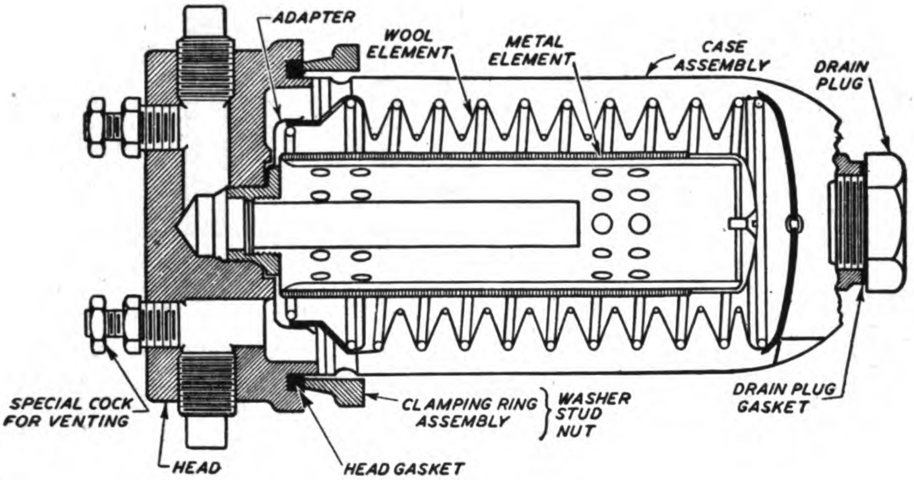

Fig. 2. Bag-Type Filter

Relief Valves. There is a 100-pound relief valve located on the oil pump to protect the pump from overpressure. All connections to this relief valve are inside the engine.

A 15-pound relief valve is provided between the radiator inlet and outlet pipes. This valve functions to by-pass oil around the radiators in the event of their clogging. A globe valve is placed in both the radiator inlet and outlet pipes. These can be used to shut off the radiators in the event of radiator breakage. Oil will then by-pass through the relief valve. If the globe valves are closed, the oil temper-

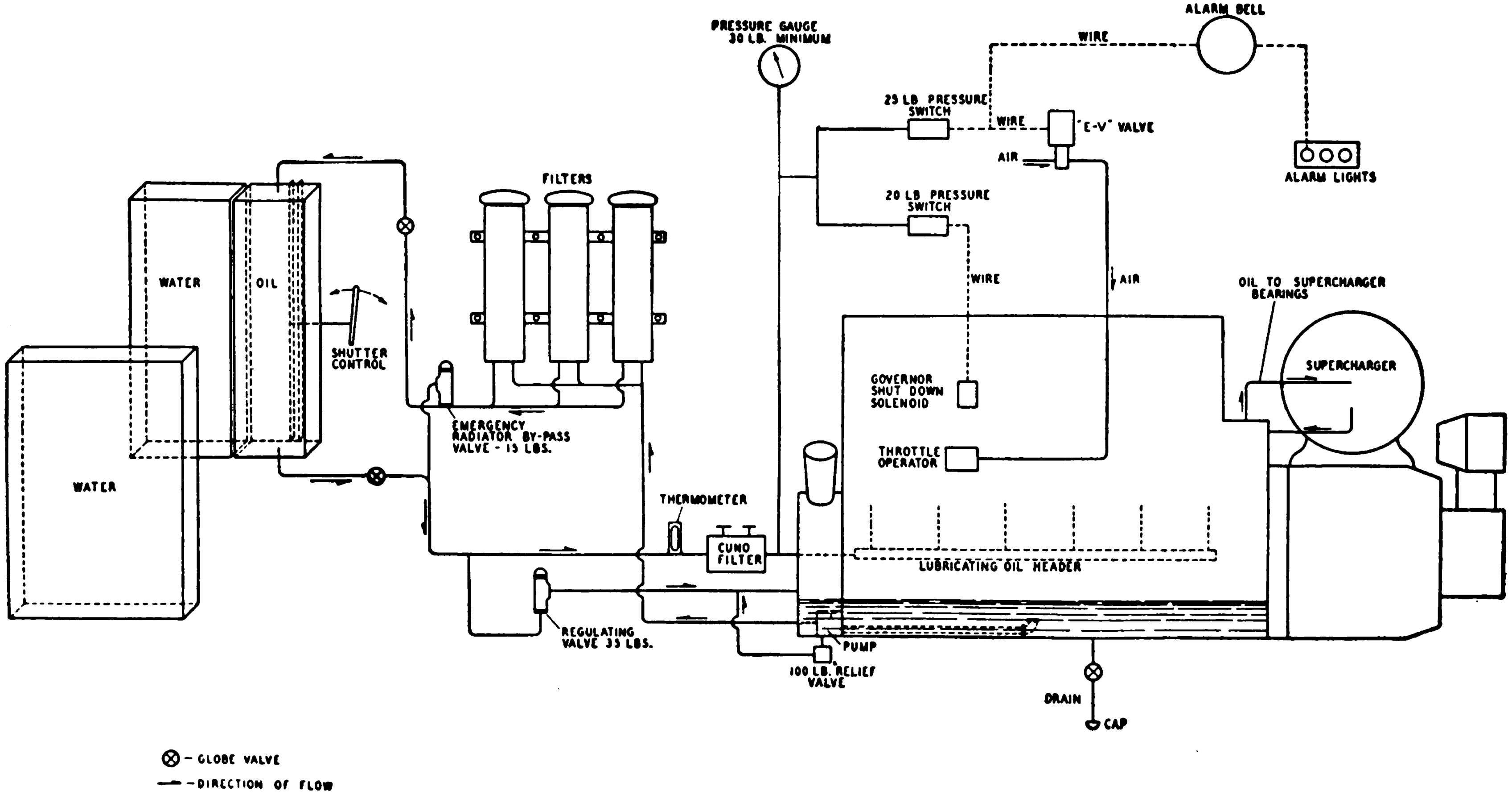

Fig. 3. Engine Lubricating Oil System—Schematic Diagram, One Engine

ature must be watched closely and not allowed to exceed 180° F. Take the engine off the line if this occurs.

A 35-pound pressure relief valve is located just ahead of the *Cuno* filters and functions to regulate the lubricating oil pressure to the desired limits (30 lbs. minimum). The dump pipe from this valve returns to the engine sump through the compressor crankcase.

Gauges. A thermometer is located on the back end of the Diesel engine at a point just before oil enters the oil header and goes to the engine bearings. A pressure gauge and two pressure switches are connected to the same point.

Temperature. Oil temperature should be held between 130° F. and 150° F. at the engine inlet as shown on the gauge. This temperature is controlled by a lever which operates shutters covering the oil radiators. Closing the shutters restricts cooling air flow through the radiators, allowing the oil to get warmer. In cold weather the shutters will have to be kept more nearly closed than in warm weather. In very cold weather the oil might congeal in the radiators if the shutters are not properly handled, causing the oil to go through the radiator by-pass pipe and overheat. If this occurs close the shutters completely until the temperature is restored to normal. If the oil temperature cannot be controlled, inspect to see if the radiator shutters are opening and closing.

Pressure Switches. Lubricating oil pressure should be a minimum of 30 pounds, as read on the gauge shown in Fig. 3, and if it falls below this there are two pressure switches which will function as shown in Fig. 3. When the pressure falls to 25 pounds, the first switch operates to reduce the engine speed to idling and to open the generator field circuit to prevent any power from reaching the truck of this power plant. If the pressure falls to 20 pounds, the second switch operates to shut down the Diesel engine. If either switch functions, the green signal lights throughout the engine room and in the cab will show and simultaneously the alarm will sound.

Low Pressure. Low lubricating oil pressure may be caused by one of the following:

(1) ***The oil being too thin.*** High oil temperature or crankcase oil dilution will cause the oil to be too thin. Causes of high oil temperature are covered in a preceding paragraph. Crankcase oil dilution can be caused by either water or fuel oil being mixed with the lubricating oil. Fuel oil can get into the lube oil if there should be a fuel pipe leak inside of the rocker box. The fuel oil dilution will be evidenced by

the oil level rising in the crankcase over what it was at the start of the run. In addition the lube oil will have a distinct odor of fuel oil. Lube oil water dilution would be caused by an internal water leak in the Diesel engine. It could be recognized by the presence of water mixed with the oil, as observed through the crankcase door opening. In case of dilution, the Diesel engine should be shut down and not operated until the oil can be changed and repairs made.

(2) ***Low lubricating oil level.*** The oil is measured with the bayonet gauge which is located in the base on the right side of the engine. The level should be measured with the locomotive on level track at the start of every run. The level should be not less than ¼ in. below the high mark with the engine shut down. With the engine running the low level limit is 1¼ in. below the high mark.

(3) ***A leak or clog in the system.*** A leaky pipe or radiator could cause low oil pressure. In case of radiator breakage shut off the radiators with the globe valves furnished for that purpose and operate the Diesel engine taking care that the oil temperature does not get too high (180° F.). If the *Cuno* filters clog, low oil pressure will result. Rotating the filter handles several times will clean them.

(4) ***Improperly adjusted relief valves.*** The 35-pound relief valve acts to regulate the oil pressure at the oil header and will allow the pressure to get too low if it should be improperly adjusted or if it should stick open due to dirt on its seat.

(5) ***Lube oil pump inoperative.*** In case there is complete loss of pressure the trouble may be due to failure of the pump. The engine will have to be shut down until repairs can be made.

Oil in Radiators Congealing. In cold weather if the oil temperature is observed to be too high and the radiator shutters are open, it is probably due to the oil in the radiators having become congealed. When this occurs the oil goes through the 15-pound relief valve in the radiator by-pass pipe. There is then no oil cooling taking place and the oil temperature goes up. If this happens close the radiator shutters tightly until the oil temperature is restored to normal. At the first opportunity the opening pressure of the 15-pound relief valve should be checked. If necessary the setting of the relief valve will have to be raised by screwing down on the spring.

In most high-speed Diesels, the lubrication system is of the force-feed, wet-sump type, wherein all of the oil is carried in the pan of the engine and is circulated by means of a gear-type pump. The pump shaft is driven from the crankshaft through a gear drive at the timing gear end of the engine. Fig. 4 shows a diagram of a typical circulating system. Oil is sucked through the screen in the pan to the pump. A relief valve is located on the pressure side of the pump which maintains a fixed oil pressure of 30 pounds and by-passes excess oil. Beyond the relief valve, the oil passes through the filter and the cooler, from which point the oil enters a main gallery line drilled in the crankcase of the engine. This acts as a distributor from which the oil is delivered to each of the main bearings. The circulation diagram shows how this is accomplished. From the main bearings, the oil passes through the drilled crankshaft to the connecting rod bearings and through the drilled connecting rod to the piston pins. The cylinder walls are splash lubricated.

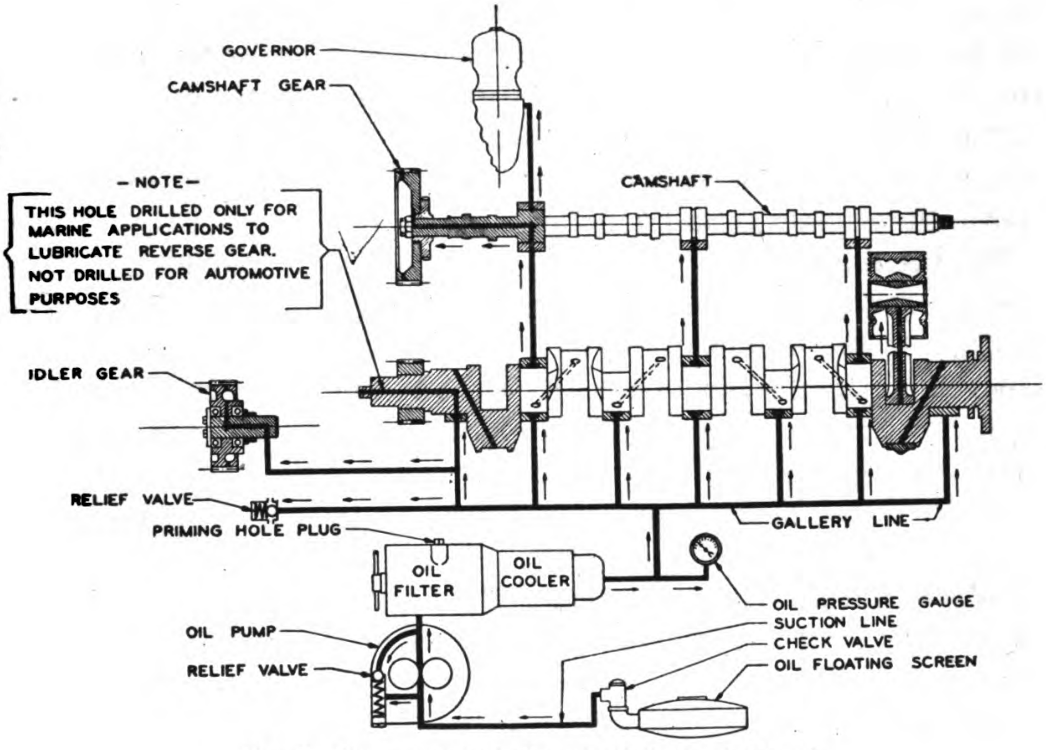

Fig. 4. Pressure Lubrication of High-Speed Diesel

The diagram also shows how the oil coming from the main gallery line to the crankshaft bearing, passes to camshaft bearings, thereby lubricating the latter. The front camshaft bearing supplies oil to the center of the camshaft which delivers it to the hub of the camshaft gear. Oil is similarly delivered from the center of the idler gear shaft to the idler gear hub. Drilled holes in the idler gear and camshaft gear hubs lead the oil to the gear teeth. The oil is forced through these holes and sprays the entire gear train. The governor is usually lubricated by a pressure lead from the main gallery line.

ENGINE COOLING WATER SYSTEM. Description of Flow. As shown in Fig. 5, water flows from the bottom of the cooling radiators into the engine water circulating pump. The pump then forces water around each individual cylinder liner and into the cylinder head water jackets and then into a common outlet header. From the outlet header, the water is carried through branch pipes to the radiators. After passing through the radiator sections, the water returns to the engine water pump and the cycle is repeated. An engine water expansion tank is connected between the water outlet header and the return pipe to the pump. Connected to the expansion tank is a vent pipe for the system and a water make-up line for adding water to the engines from the boiler tank.

Thermometers. All thermometer connections are to the water outlet header on the Diesel engines. One mercury type thermometer is located on the header itself. One motometer thermometer is located at the engine gauge stand and it is cable connected to the header. One temperature switch is cable connected. The temperature switch functions to operate red signal lights throughout the engine room and cab if the water temperature should exceed 180° F. Simultaneously the alarm gongs are sounded.

Water Level. There is a water glass on the end of the expansion tank provided for reading the water level in the engine. This level should show full to the top of the glass at all times.

Make-Up Water. Connected to the boiler water tank is a small water pump as shown on the illustration. The purpose of this pump is to add water to the engine cooling systems while on the run, if necessary. If the water level shows low in the glass, open the globe valve in the pipe leading from the pump to the engine tank with low water. Throw the switch to operate the pump and when the glass is full, shut off the pump and close the valve.

Temperature Control. The cooling water temperature is controlled by shutters on the outside of the cooling radiators. Closing the shutters restricts air flow through the radiators and allows the water to heat up. Opening the shutters gives more air flow and causes the water to get cooler. For maximum cooling open the shutters wide and close the radiator by-pass shutters. For minimum cooling close the radiator shutters tightly and open the by-pass shutters.

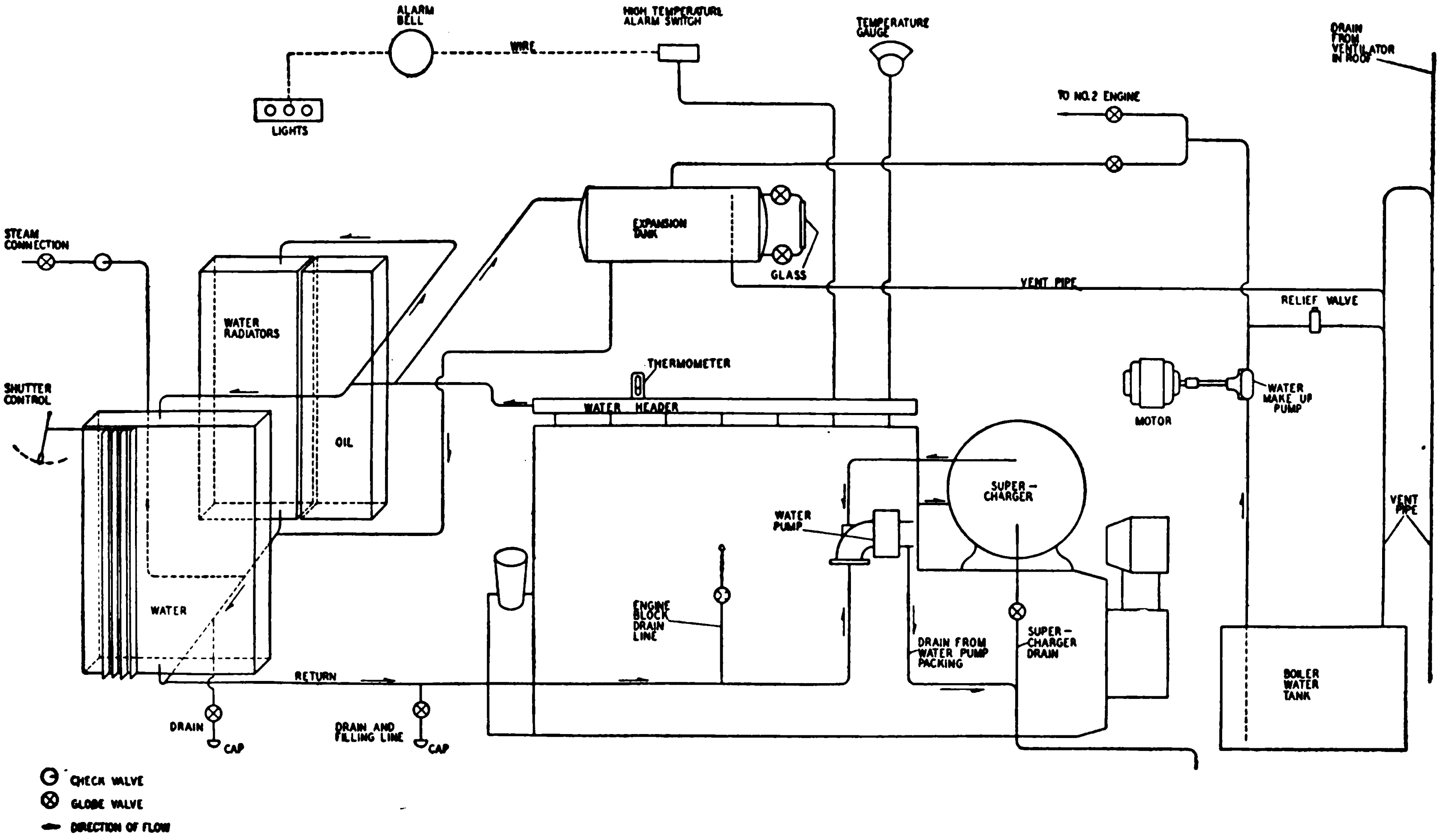

Fig. 5. Engine Cooling Water System—One Engine

The desired cooling water temperature is between 150° and 170° F. Do not exceed 190° F.

Do not shut down the Diesel engines immediately after a long pull when they are very hot.

Do not operate the Diesel engines at full throttle unless the water temperature is in excess of 120° F.

If the cooling water temperature is too low and it is desired to increase it, crack the valve in the steam connection to the radiator outlet pipe. This will admit steam from the train heating boiler to the engine water system.

If the water temperature cannot be controlled, check to see that the radiator shutters are operating.

To Fill Cooling Water System. To fill the water system, first close all drain valves as shown in Fig. 5. Remove the cap from the drain and filling line and open the drain and filling valve located in the floorline adjacent to the engine to be filled. Fill until water appears at the expansion tank vent pipe. After the system is filled close all drain valves, *including the valve in the engine block drain line.*

To Drain System. In case it should be necessary to drain the system, open the drain and filling valve located in the floor return line to the engine water pump. Open the supercharger drain cock. Open the engine block drain valve. Open the drain valve in the crossover pipe running on the floor between the radiators. Remove the plug from the drain and filling line on the right side under the locomotive frame. In freezing weather leave valves open after all water has been drained out, to prevent water accumulation and freezing.

Overheating. If the water temperature is in excess of 180° F. and operates the alarm system, first check to see if the radiator shutters are operating properly. They may be jammed and not opening all the way up. Next, check the water level in the glass. If the engine has overheated from low water, proceed as follows:

The engine should be allowed to idle and hot water, if possible, should be added *slowly.* If it is necessary to add cold water, it should be added *very slowly* after the engine has cooled down to the extent that your hand can be held comfortably over various parts of the engine water jackets.

If neither improper shutter operation or low water has caused overheating, check to see if the engine water pump is operating. This can be done by feeling various parts of the cooling system. If the external water circulating pipes are cool and the water outlet header is very hot, the pump is not circulating any water. Also check the radiator fan drive mechanism. If the fan is not running, high temperature will result. An open engine block drain valve will cause high temperatures.

In case of pump or fan failure, the Diesel engine must be idled for a few minutes, then shut down and not used until repairs are made.

Freezing Precautions. During layover periods in freezing weather, or when the locomotive is being handled by other power, such as a steam locomotive, or while it is being towed dead in a train, particular precautions should be taken that the engine cooling water is heated. If a steam line is connected to the locomotive, or if a heating boiler is in operation, the heater valves, one for each engine should be partly opened. Also open the heater line to the boiler water tank.

If no steam is available, be sure to drain all Diesel engines completely as explained in a previous paragraph. Also drain the boiler water tank when there is danger of freezing.

If electric immersion water heaters are in the system, turn them on instead of draining the water.

Water Pump Packing. A small amount of water will always drip from the water pump packing and drain through the pipe shown in Fig. 5. This water serves to lubricate the packing. The amount of drippage should be a drop every few seconds. If the drippage is excessive the water pump packing nut can be taken up one or two notches. Care must be used not to tighten the nut too much. If there is no water leaking through, there is danger of bearing seizure.

Excessive leakage at the packing can be caused by a worn shaft bushing. This condition can be recognized by continual chattering of the water pump shaft and gear.

Cold Weather Operation. In exceptionally cold weather special care will have to be taken to keep the engine oil and cooling water temperatures in the proper operating range. The following points should be watched:

(1) Before starting the run make sure that all radiator shutters will close tightly under the control of the operating levers.

(2) The ventilators over the intake filters may have to be partially closed so as to draw warm air from the engine room for combustion in the engine. If the intake air is too cold, heavy whitish blue smoke

will come from the engine exhaust, showing incomplete combustion.

(3) Engine room ventilation will have to be carefully controlled. Care should be taken not to close up the engine room too much as this will starve the Diesel engine combustion system, the traction motor blowers, and compressors for air.

(4) If the engine cooling water cannot be kept warm enough, even with the radiator shutters tightly closed, then the steam connection from the steam boiler to the cooling water system may be opened slightly.

Excessive Leakage from System. If it is necessary to continually add water to one of the engine cooling systems to maintain the level in the expansion tank water glass, the system must be checked for leaks. First, check the water pump packing as previously explained. Next, check all piping and drains in the system. Make sure that the radiators are not leaking. If no leakage can be found at any of these points, there may be an internal leak in the engine. If water is leaking into the crankcase, the lubricating oil level will rise. If this occurs shut down the Diesel engine. If a cylinder head is cracked water can go out the exhaust. This latter condition will also be evidenced by spasmodic changes in the level in the water glass.

Chapter 12

Governors

As will be discussed later, an engine is able to deliver power in proportion to the amount of fuel introduced into the cylinders. Also, at a decrease in the load carried by the engine, the amount of fuel injected into each cycle, if not changed, will be more than sufficient to deliver the power needed under the new conditions. As a consequence, the engine, if not controlled, would speed up and eventually overspeed to a point where the flywheel would break due to centrifugal force. Conversely, at an increase in load the engine would slow down and stop, for not enough fuel would be introduced into the cylinder to meet the increased load.

The amount of fuel injected, then, must be regulated in accordance with the load.

This control is brought about through the medium of a speed governor whose functioning depends upon a change in engine speed.

Obviously, no commercial engine can experience any great change in speed, for most services require close speed control.

Sluggishness is due to internal friction in the governor parts and friction and inertia of the linkage and fuel-pump parts.

If the friction is great, it is plain that the engine will change its speed considerably before the increase in governor centrifugal force is able to overcome the frictional resistance.

If the governor and linkage parts are heavy, it is a common experience to find that when the governor finally does start to seek its new position, that the inertia of the heavy parts will cause the governor weights to go beyond the positions they should have for the existing engine speed. For example, the engine load drops and the engine speeds up until the governor can act to reduce the fuel supply. Inertia may cause the governor to go too far and so reduce the fuel that the engine speed drops far below the fuel-load rate. This causes the governor to move the other way, to bring the speed up by increasing the fuel supply. Inertia carried the governor beyond this point, with the result that so much fuel is injected that the engine speeds up beyond the fuel load rate. This cycle continues, so that the engine is said to *hunt*.

It is obvious that the governor cannot have much internal friction nor can it be made heavy to offset the friction. On the other hand, if the friction is low and the parts light in weight, the governor may be so sensitive as to *flutter* or *hunt.*

TYPICAL AUTOMOTIVE GOVERNOR. The function of the governor is to maintain any engine speed determined by the position of the governor control lever, regardless of load applied to the engine, unless of course the load is beyond the capacity of the engine at that speed. This governor maintains a constant engine speed and if the load is suddenly released the engine will still maintain the same speed, because the governor constantly regulates the control rod of the fuel-injection pump which in turn regulates the effective length of the pump plunger stroke.

The governor includes two weights hinged to a spider which is mounted on and driven by the governor shaft. This whole assembly is driven by a gear and pinion from the fuel pump shaft. As this assembly rotates, the governor weights open due to centrifugal force. A sleeve, which has a clearance fit around the governor shaft, has a shoulder on one end which is in contact with fingers on the governor weight; on the other end, a shoulder is in contact with a bearing which is pivoted in the governor yoke.

The lower end of the yoke is fulcrumed on a pin which is held firmly in the governor rear housing. The upper end of the yoke is connected with the control rod of the fuel-injection pump by an adjustable type link. A calibrated spring is also attached to the top of the yoke and to an arm on the governor control shaft. As the yoke is attached to the control rod of the fuel injection pump by a link, the control rod follows the motion of the governor yoke; thus, when the weights are open, the rod is moved to the left, thereby shortening the effective stroke of the pump plungers so less fuel is delivered to the fuel nozzles and engine cylinders. When the weights are closed, the control rod is moved to the right, the maximum effective length of plunger stroke is permitted, and the maximum amount of fuel is delivered to the engine cylinder.

When the engine is being started, the weights are closed, giving maximum fuel to engine cylinders. As the engine begins to pick up speed, the weights open more and more until they are wide open at governed engine speed.

Owing to the fact that the governor spring is attached to the yoke, it must be stretched as the yoke moves to the left, which increases the spring tension. The yoke is moved to the left by the governor weights which are opening due to centrifugal force.

When the spring tension balances the force in the weights, the weights cannot open any farther and the control rod is held in that position until the force in the weights is changed. The force in the weights is changed by speed, thus the greater the speed the greater the force. The spring tension is changed by the movement of the yoke so, the greater the movement, the more the spring is stretched and the greater the tension. The engine speed is changed by applying load to the engine or by moving the governor control lever.

As load is applied, the engine speed tends to slow down due to insufficient fuel being supplied at the instant of increased load. The speed drop reduces the force in the governor weights, and the spring moves the yoke and control rod back toward full effective stroke position of the fuel-injection pump plungers until the force in the weights and spring tension balances. This increases the amount of fuel delivered to the fuel nozzles and engine cylinders, and increases the speed to where it was before the load was increased.

When overload is applied, the engine begins to slow down; thus, the greater the overload, the slower the engine speed. As the engine speed decreases, the force in the weights decreases, so that the tension in the spring, being greater than the force in the weights, returns the fuel-injection pump control rod to the right or toward full effective stroke position of the pump plungers. This continues until the weights are completely closed and the full effective plunger stroke is being utilized. However, if the full effective stroke of the pump does not deliver enough fuel to carry the overload, the engine then operates at a reduced speed.

Idling at reduced speed is accomplished by moving the governor control lever to the left to idle-speed position. This rotates the governor control shaft on which the governor spring arm is rigidly fastened, and the spring is then operated as a link by this arm. The governor yoke is moved to the left manually so the governor weights have no control of its movement. When the yoke is so moved, it operates the control rod of the fuel-injection pump and shortens the effective plunger stroke; thus, less fuel is delivered to the fuel nozzles and engine cylinder, and the engine speed is reduced.

Stopping the engine is accomplished by moving the governor lever as far to the left as possible to the stop position. This operates the governor spring as a link, the same as when idling the engine, except that the governor yoke is moved to the left to a position which has rotated the fuel-injection pump plungers so that no fuel is being delivered to the fuel nozzles and engine cylinders.

TYPICAL HEAVY-DUTY GOVERNOR. The type described here is the SI Woodward governor equipped with special speed adjusting mechanism and special power cylinder. The object of these special parts is: (1) To permit adjustment of the engine speed over its full operating range; (2) to provide automatic means of shutting down the engine.

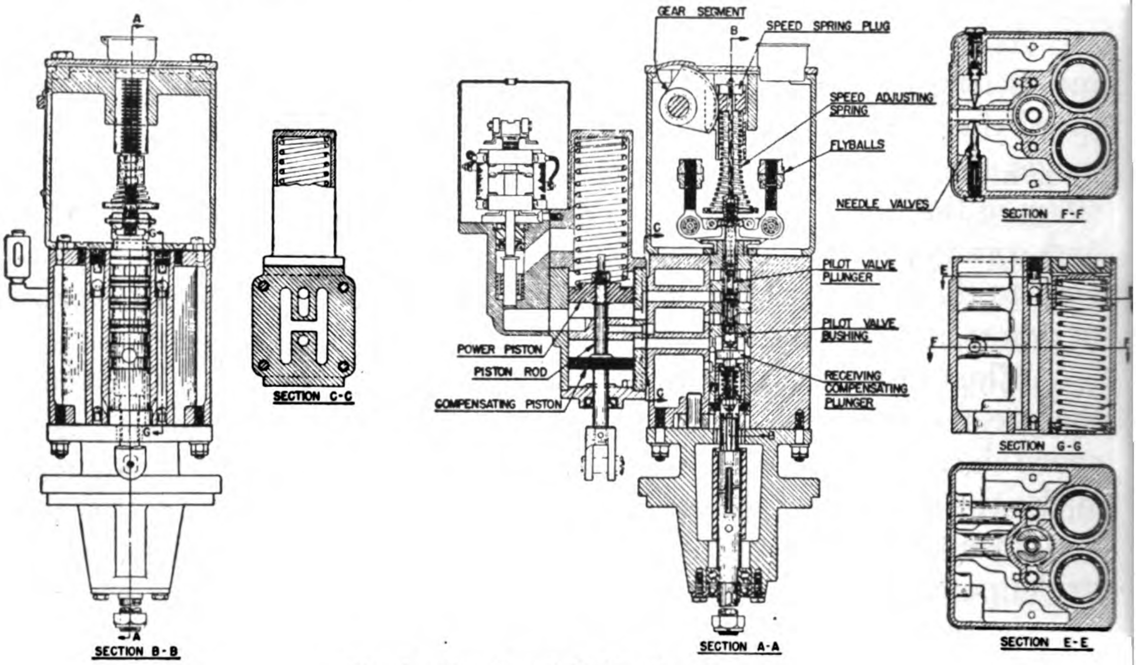

Fig. 1. Woodward Hydraulic Governor

To change the operating speed of the engine, it is necessary only to change the amount of compression of the speeder spring or speed adjusting spring. The speed adjusting shaft supports and is integral with the speed adjusting lever. The teeth in the segment on the lever mesh with corresponding rack teeth in the speeder spring plug. The speeder spring plug bears on the top of the speeder spring. Therefore, a movement of the shaft results in a change in the amount of compression of the speeder spring and a corresponding change in engine speed.

Operation Explained. The Woodward Governor, Fig. 1, consists essentially of only three elements:

1. The speed measuring device or governor head.
2. The power element which, on indication from the governor

head, performs the work of changing the amount of fuel injected into the engine cylinders.

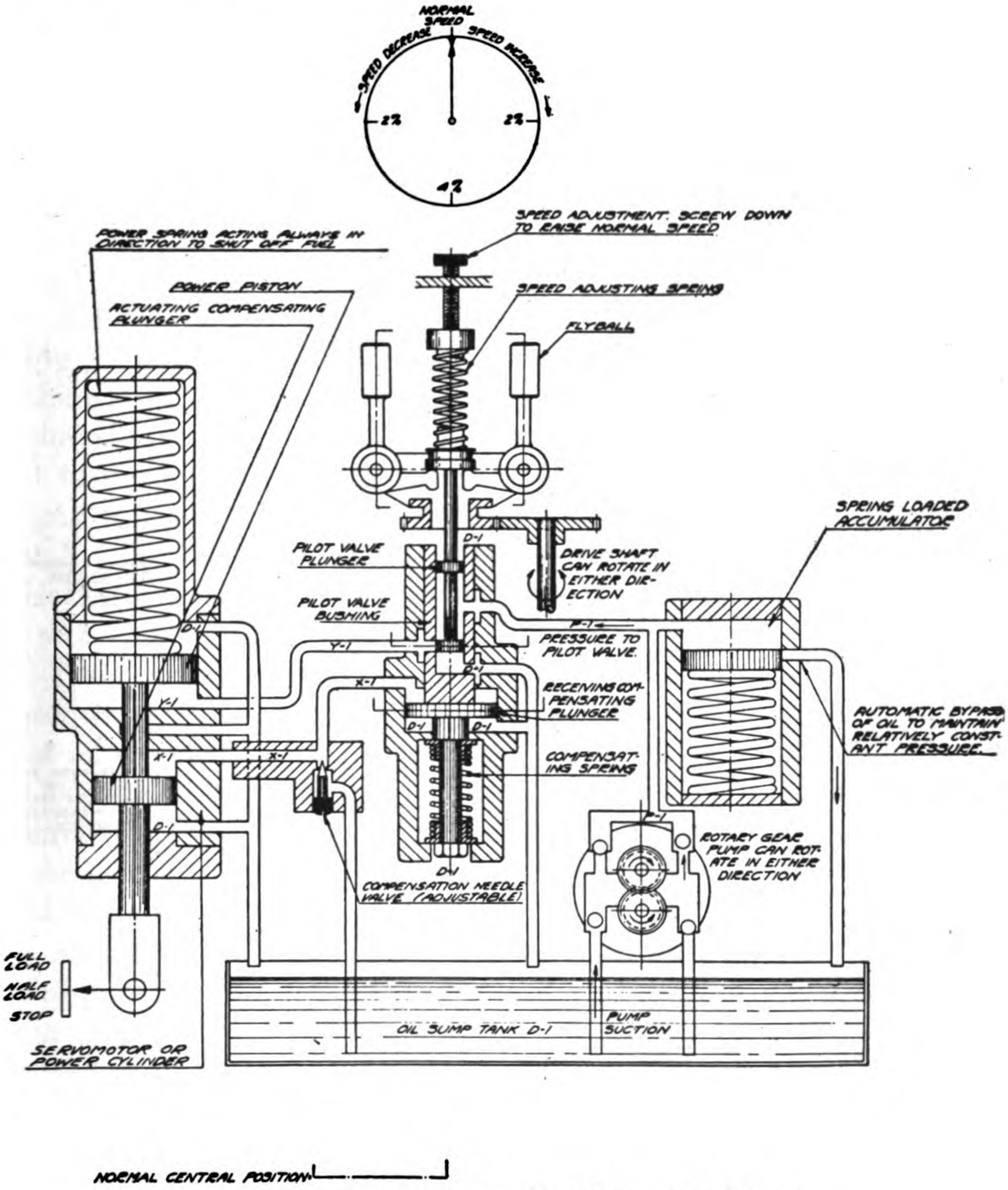

Fig. 2. Governor Diagram—Normal Speed, Half Load

3. The stability or compensating element which prevents racing or hunting of the Diesel engine by stopping the governor movement when this movement is sufficient to bring the speed back to normal.

In the schematic drawings, the movements of the governor parts have been exaggerated to make them more visible. The part called the receiving compensating plunger is really the lower end of the pilot valve bushing, and, therefore, moves with it. The actuating compensating plunger (also called the compensating piston) and the power piston also are rigidly connected and move together.

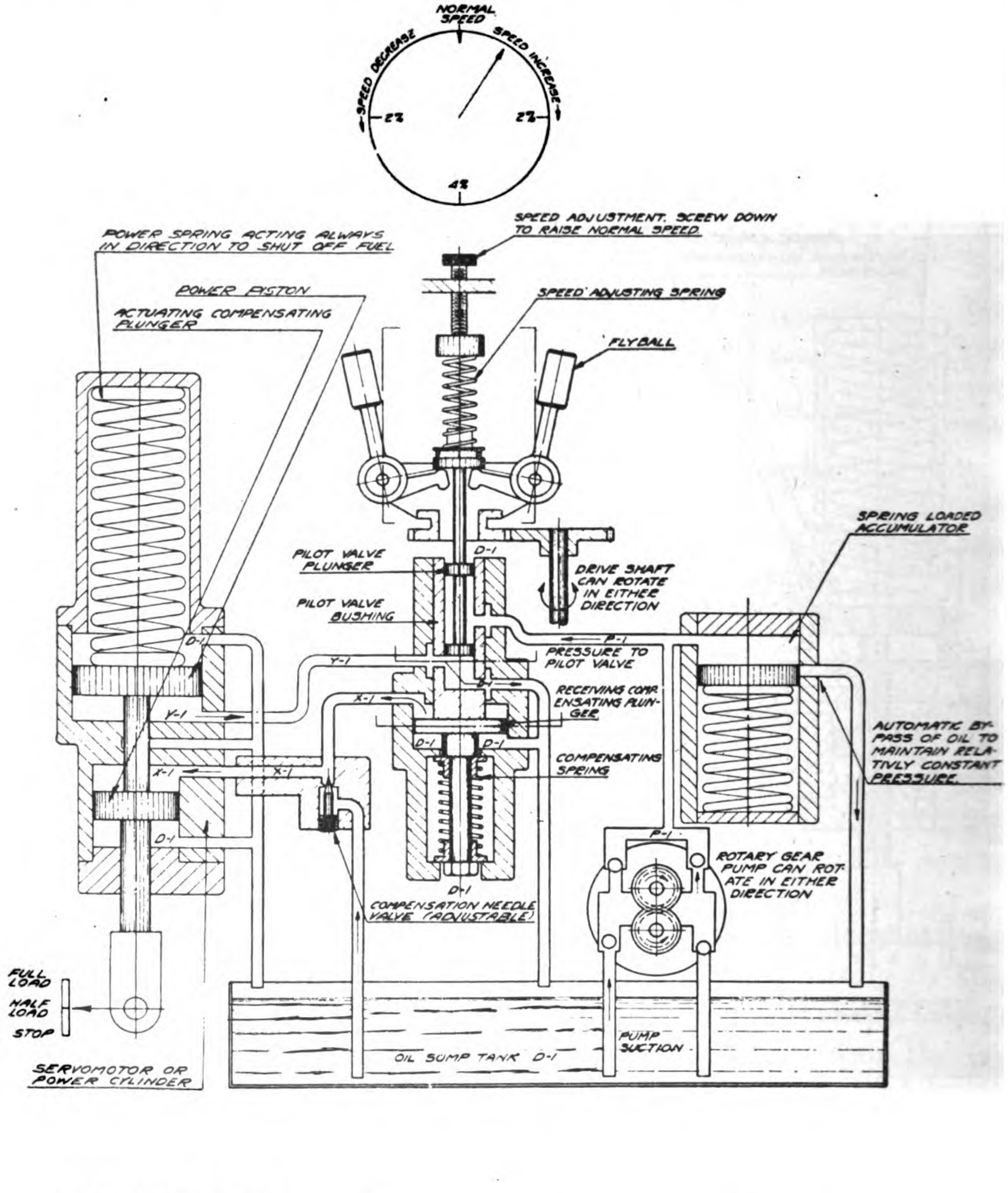

Fig. 3. Governor Diagram—Speed Increase, Load Reduced

Assume that the engine is running at normal speed, as shown on the speed indicator, Fig. 2, and carrying half load, as shown on the indicator. Assuming also that all governor adjustments are properly set, the flyballs, pilot valve plunger, and pilot valve bushing are centered and the port in the pilot valve bushing is exactly covered by the lower disk of the pilot valve plunger. The power piston is stationary at a position corresponding to about half load on the engine.

Decrease in Load. If a certain percentage of load is dropped from the engine, the speed starts to rise and the flyballs move outward a distance proportionate to the speed change. See Fig. 3. This movement forces the pilot valve plunger upward a proportionate distance against the speed adjustment spring (also called speeder spring). The port in the pilot valve bushing is uncovered, opening the port *Y-1* to the discharge sump area *D-1.* This permits the power spring to push the power piston downward. The piston rod, being mechanically connected to the fuel control mechanism, moves the mechanism in the direction to reduce the supply of fuel being delivered to the engine and, therefore, to reduce the engine speed.

As the power piston moves downward, a vacuum is formed in area *X-1.* At the same time the vacuum is relieved through the compensating needle valve to allow the compensating spring to recenter the receiving plunger.

The passage through the needle valve is very small, however, and, consequently, the amount of oil coming through does not have any great effect on the vacuum while the power piston is in motion, but it has considerable effect the instant the power piston stops moving. Whereas in Fig. 3 the port in the pilot valve bushing was fully uncovered, it will now be about half covered due to the upward movement of the receiving plunger.

As the power piston continues to move downward, the pilot valve bushing moves upward until the port in the pilot valve bushing is again exactly covered by the lower disc of the pilot valve plunger. See Fig. 4. The instant the port is covered, the flow of oil from the area *Y-1* and the downward movement of the power piston will be stopped. If the ratio of movement of the operating parts of the governor is correct, the amount of fuel supplied to the engine will have been reduced just the amount necessary to accommodate the reduced load and the speed will return to normal.

All that is necessary now is to keep the power piston stationary until the speed returns to normal or a subsequent speed change occurs. As the engine speed returns to normal, the governor flyballs will also return to their central position. As the flyballs return to center, the pilot valve plunger will also return to its central position.

If the power piston is to be kept stationary, the port in the pilot valve bushing must be kept covered.

Consequently, the pilot valve bushing must return to its central position in unison with the flyballs and the pilot valve plunger. This is accomplished by adjusting the flow of oil through the compensating needle valve to permit the compensating spring to recenter the compensating receiving plunger and pilot valve bushing in exact unison with the return of the speed to normal. After this valve is once ad-

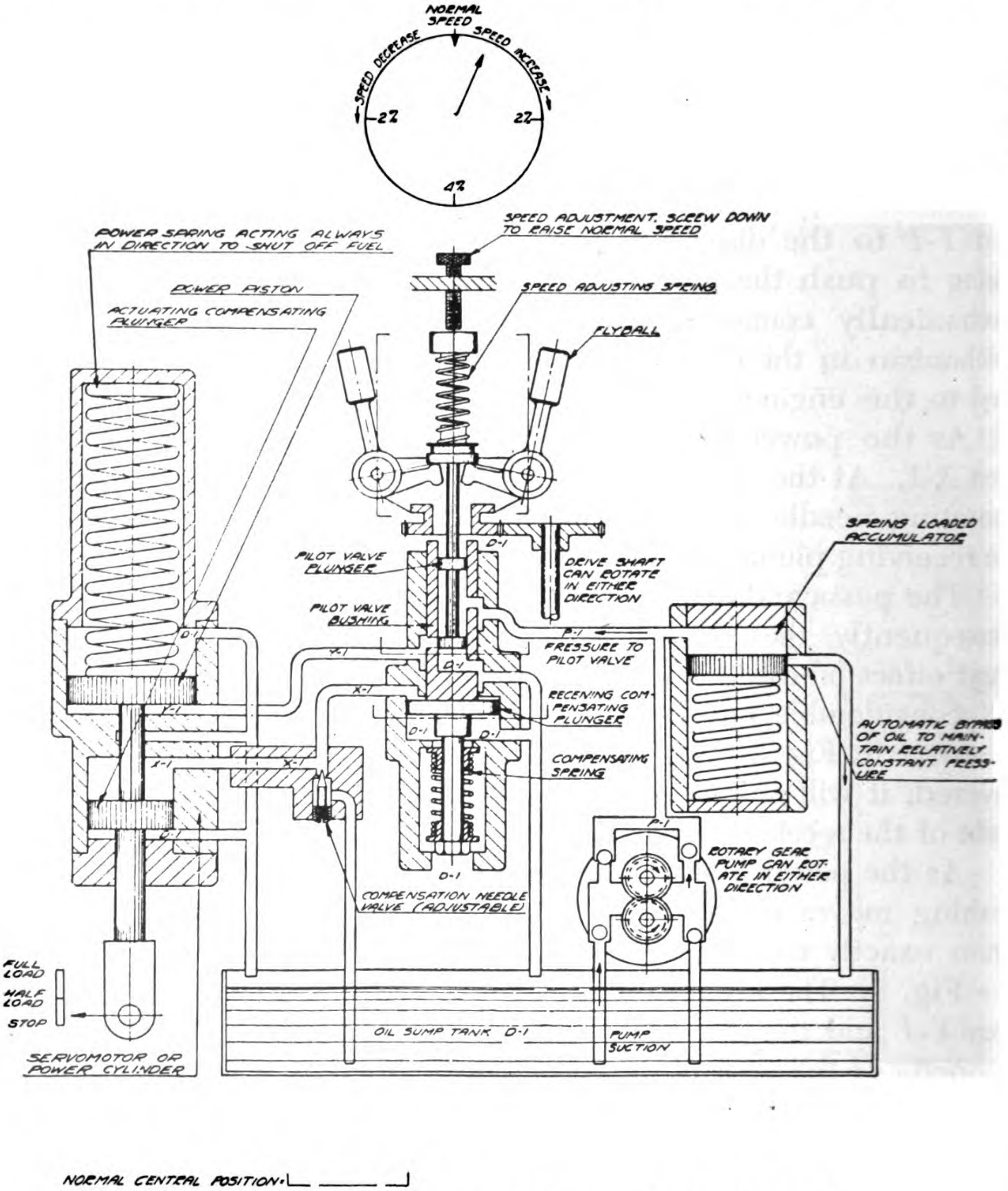

Fig. 4. Governor Diagram—Speed Compensation, Load Reduced

justed to the response of the particular engine, it need not be changed again.

At the completion of the cycle all of the operating parts are in their original positions with the exception of the power piston, which is in the position corresponding to the reduced load on the engine. The pilot valve plunger and pilot valve bushing moved downward to their central position together. The port in the pilot valve bushing remained covered and, consequently, the power piston remained stationary.

Increase in Load. The cycle of operation for an increase in load is just the reverse of that described above. Load is thrown on the engine—the speed decreases—the flyballs move inward—the speed adjusting spring pushes the pilot plunger downward, uncovering the pilot valve bushing port—pressure oil passing into area *Y-1* forces the power piston upward against the downward force of the power spring —the upward movement of the power piston increases the fuel flow and creates pressure in area *X-1,* which forces the pilot valve bushing downward until the port in the bushing is covered by the lower pilot plunger disc—the power piston stops at the exact position corresponding to the increased load—the speed begins to return to normal —the flyballs move toward their central position—the compensating spring recenters the receiving plunger and bushing in exact unison with the return of the speed to normal by forcing the oil out of area *X-1* through the compensating needle valve so that the port in the pilot valve bushing is kept covered. The power piston now remains stationary and the completion of the cycle finds the flyballs, the pilot valve plunger, and the pilot valve bushing centered and the power piston in a position corresponding to the increased load.

Care of Governor. Check the oil level in this governor every day, using a good grade of governor lubricating oil of SAE 40.

The governor should be flushed periodically and particularly if engine speed becomes erratic. Drain the oil, fill with kerosene or clean fuel oil, run the engine a few minutes, then drain again and fill with new lubricating oil. Run engine again for only a few minutes and drain again, then make final filling with lubricating oil. Check oil level after running.

Although there are several internal adjustments which can be made on this governor to correct erratic engine speed it is, in general, neither wise nor practical to dismantle the assembly. If the engine hunts very badly a new governor should be installed and the defective assembly returned to the manufacturer for reconditioning.

When installing a new governor care should be taken to have the drive gear and key a good fit on the shaft. The gear should not be driven on, but it should fit on the shaft when tapped with a wooden block. The Diesel engine speeds will have to be readjusted carefully and checked to 320-360 r.p.m. at idling and 750 r.p.m. no load top speed.

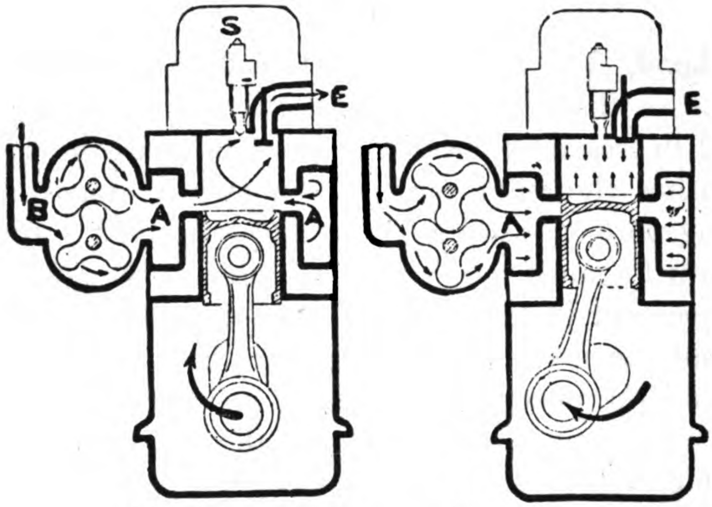

Charging of Cylinder Compression of Air Charge

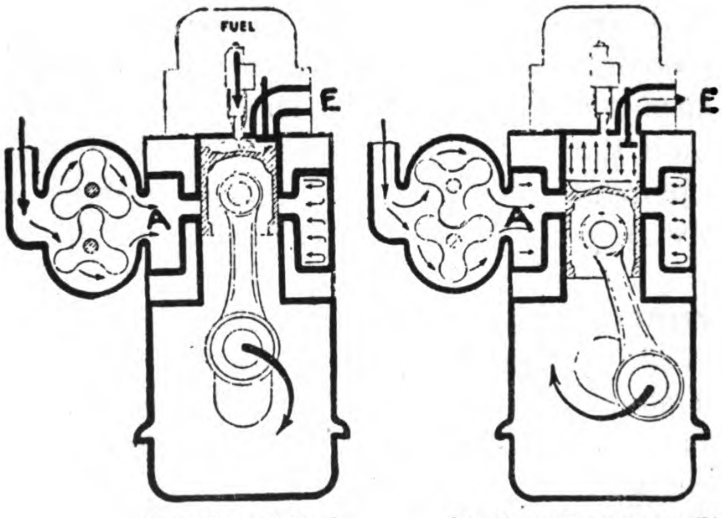

Injection of Fuel Gas Exert Pressure on Piston

Action of the General Motors Two-Cycle Diesel

Chapter 13

Supercharging and Turbo-Charging

Supercharging means charging the engine with air at a super pressure, that is, a pressure above atmospheric pressure. The pressure generally varies between 2 to 5 pounds per square inch gauge pressure. The pressure may go up to 10 pounds and in some special cases it will go up to 30 pounds or more.

There are two methods of supercharging:

(1) Positive displacement blower generally of the Roots type, gear or belt driven.

(2) Centrifugal blower—

(a) Gear driven as used on most aviation engines and automobile engines that are supercharged.

(b) Turbine driven as used on heavy-duty large engines, primarily locomotive engines. This type also is used on the larger sizes of aviation engines especially to boost the power at high altitudes.

(1) THE ROOTS TYPE BLOWER. This is used primarily on electro-motive engines and many small engines.

The principle of this blower is shown on the opposite page with the air coming in at the *B* side and by the wings rotating the air is forced over to the *A* side and from there into the engine. The action of the blower is the same regardless as to whether a 4- or 2-cycle engine is used. In the case of the General Motors engine in drawings on opposite page, the blower is large and therefore gear driven. Fig. 1 of this chapter, featuring the Cummins engine, shows the blower belt-driven from the engine crankshaft.

One inherent characteristic of this blower is of special importance. Regardless of speed changes, this type of blower delivers air in proportion to the speed of operation so that the volume of air matches the needs of the engine at any engine speed. The pressure built up by the blower balances the resistance of flow of air through the engine and is not a result of the speed of operation, so that no power is wasted in developing excess pressure beyond that required. Thus the air requirements of the engine at any speed are met without waste making an efficient method of supercharging, the blower taking its required amount of driving power direct from the engine crankshaft.

A description of the Cummins supercharger is given as follows and this is typical of the 100 to 300 hp. class of superchargers.

CUMMINS SUPERCHARGERS. The following pages cover only service and installation of parts on supercharged engines that are not used on the standard H engines.

Removal of Intake and Exhaust Manifold. 1. On supercharged engines it first will be necessary to remove eight nuts and washers from supercharger intake flange and remove intake pipe. When removing supercharger intake manifold, disconnect plug, wire, and fuel line to preheater. Be careful not to lose pack ring in expansion joint between manifold and supercharger discharge connection.

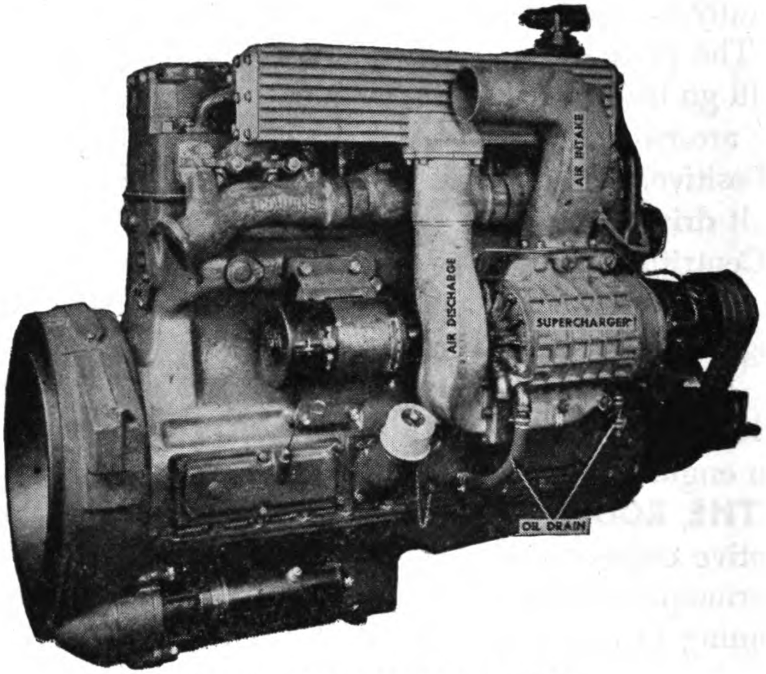

Fig. 1. Supercharger on Engine

Caution: Always cover supercharger intake with clean cardboard.

Installation of Intake and Exhaust Manifold. 1. On supercharger manifold be sure that the pack ring in the expansion joint is in good condition and installed properly.

2. With a new gasket assemble supercharger intake connection over studs to supercharger and secure in place with eight washers and nuts.

Caution: Always be sure all connections are air tight. Air not going through air cleaner will cause serious damage to engine.

Removal of Supercharger. 1. Remove air cleaner.

2. Disconnect vapor line from rocker housing to supercharger intake tube.

3. Disconnect lubricating oil tubes.

4. Remove the eight nuts and lockwashers around the flange of the intake tube and remove the tube. (Fig. 1.)

Caution: Cover supercharger opening with piece of cardboard. Do not use rags.

5. Loosen the manifold clamp nuts.

6. Lift intake manifold from engine.

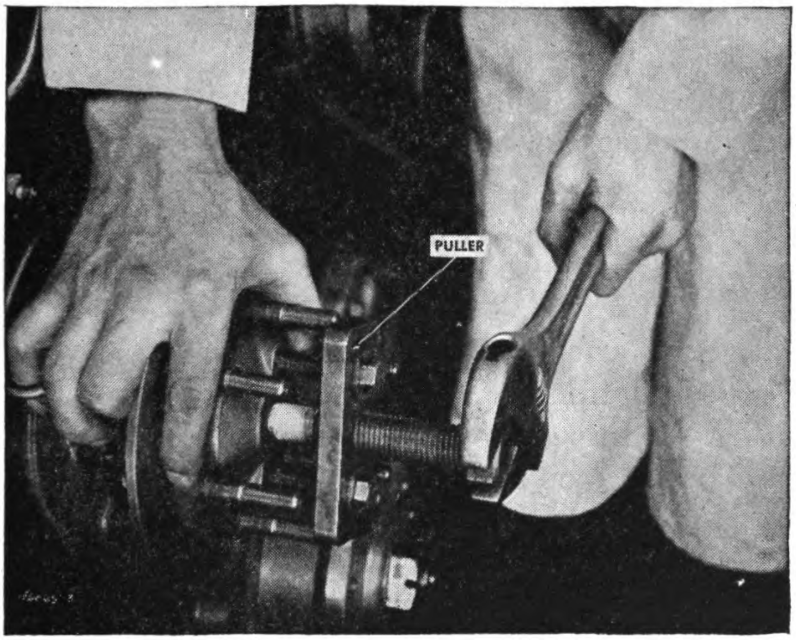

Fig. 2. Pulling Drive Sheave

Note: Do not lose rubber packing ring.

7. Remove lubricating oil drain lines and spring on drain cock.

8. Remove four bolts holding supercharger to block.

9. Lift the supercharger slightly upward and backward and remove from engine.

Removal of Supercharger Drive Unit. 1. Remove eight nuts and lockwashers from the face of the drive pulley.

2. Remove sheaves and shims, keeping them in proper sequence.

3. Remove cotter pin, nuts and washer from front of shaft.

4. Pull the driving sheave with puller. (Fig. 2.)

5. Remove six nuts and lockwashers and one cap screw and lockwasher from packing ring.

6. Remove packing ring and rubber seal.

7. Remove four cap screws from rear bracket.

8. With a soft hammer, tap on the front end of the shaft and remove entire unit from gear case.

Removal of Gear Case Cover. On supercharged engines it will be necessary to remove the supercharger drive unit described above, remove crankshaft pulley and pull flange from crankshaft. This flange is fitted to a taper.

Reassembly of Gear Case Cover. On supercharged engines it will be necessary to assemble crankshaft flange and pulley. Assemble supercharged drive unit as described below.

Service and Installation of Supercharger Drive Unit. ***Disassembly.*** 1. Lift key from front of shaft.

2. Press on end of shaft to remove bracket and shaft from cage.

3. Remove cotter pin, nut and lockwasher from coupling end of shaft.

4. Pull coupling with suitable puller.

5. Remove coupling key from shaft.

6. Press shaft from bracket.

7. Remove snap ring and take bearing from bracket.

8. Press bearing from front of cage.

Assembly. 1. Inspect bearings for wear and replace if necessary.

2. Press bearings on shaft in correct position.

3. Assemble keys to shaft.

4. Inspect oil seals. If defective, replace.

5. Install inside snap ring in bracket.

6. Press shaft into bracket until bearing rests against snap ring.

7. Install outer snap ring in bracket.

8. Press coupling in place on shaft.

9. Assemble coupling washer and nut on shaft and lock with cotter pin.

10. Place cage gasket on bracket and press cage over large bearing until it seats on bracket.

Note: Make sure cap screw holes in cage, gasket and bracket are aligned.

11. Assemble unit to engine with new gasket.

12. Install the four cap screws which hold the unit to the gear case.

13. Place rubber seal over cage against gear case cover. (Fig. 3.)

14. Assemble packing ring over studs, and tighten down with six lockwashers and nuts. Install one lockwasher and cap screw.

15. Place driving sheave on shaft with keyway in proper alignment with key. Pull on with suitable puller and lock with washer, nut and cotter pin.

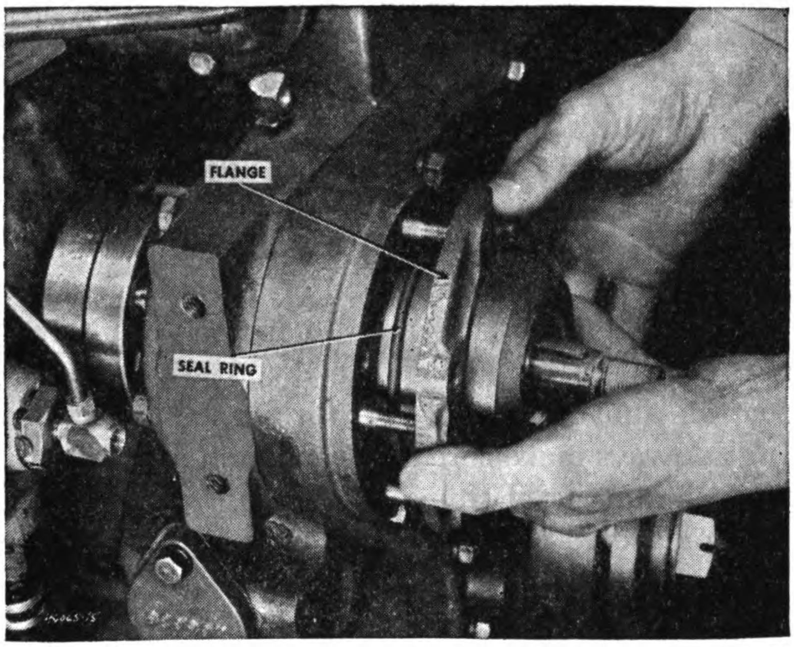

Fig. 3. Drive Unit Seal

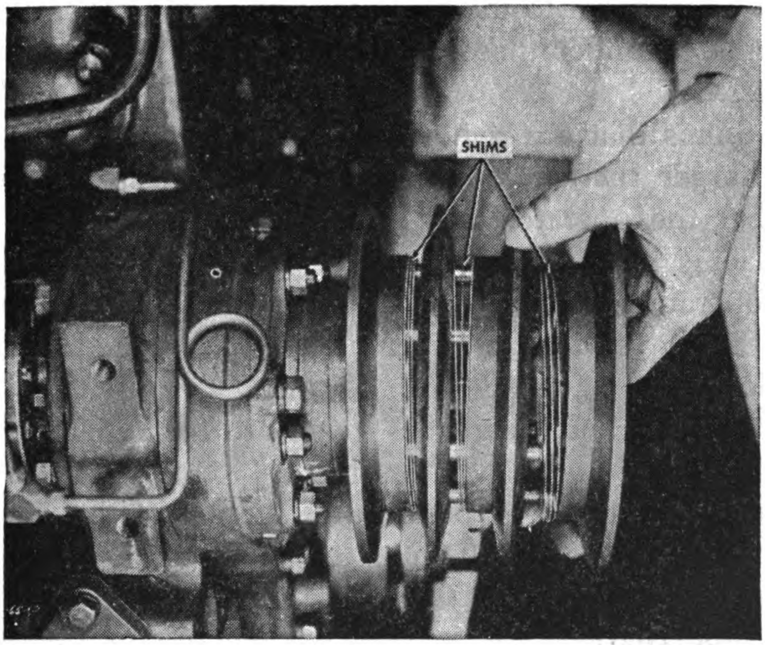

Fig. 4. Drive Pulley and Shims

Caution: The six bolts which hold the pulley together must be placed in position in the driving sheave before it is assembled to the shaft.

16. Assemble shims and sheaves. (Fig. 4.)

Note: Drive belts must be assembled with sheaves and shims.

17. Place the lockwashers on the six bolts and start the nuts.

18. Tighten each nut one complete turn and then rotate engine one-half turn. Repeat these operations until pulley members are tight. Rotating the engine eliminates the possibility of the belts becoming pinched.

Supercharger drive belts are tightened in the following manner:

1. Remove the nuts, lockplates, sheaves, shims and belts from the drive pulley.

2. Omit one shim from *each* section of the pulley and reassemble pulley as per instructions 16-17, and 18 under Assembly of Supercharger Drive Unit.

3. Repeat the above procedure for further tightening if necessary.

Warning: Always make sure that each section of the drive pulley contains the same number of shims.

If one section should have less shims than the other two, then that particular groove would have a greater pitch diameter and, consequently, the belt running in that groove would be tighter than the other two. This means that the tightest belt would do all the driving until it was worn down to the same tension as the others. The rapid wear encountered under those conditions would make the belt practically useless.

Note: Shims that are removed should be saved for further use.

Supercharger Instructions. The following instructions are prepared so that the operator may give the necessary inspection and care in replacing bearings and oil seals in the supercharger.

Other operations require special equipment and we recommend that for any major service the supercharger be returned to the nearest Cummins dealer.

All instructions and clearances given are for superchargers with aluminum rotors and housing.

Periodic Inspection. A periodic inspection of the supercharger should be made every 15,000 miles or 750 working hours without removal from engine.

Clean supercharger. It is very important that the exterior of the supercharger be thoroughly cleaned before attempting any inspection. Wash thoroughly with kerosene or mineral spirits.

Caution: Do not use any solution that will damage aluminum or any other finished surfaces.

Inspect rotors. Remove intake and discharge connections to expose interior of supercharger.

Caution: Before removing any connections from the supercharger, it is very important that precaution be taken to see that engine cannot be started while inspection is being made. Be very careful when connections are off supercharger that you do not drop rags, dirt, etc., into the supercharger or serious damage will result.

With suitable means turn the engine over and inspect rotors for any scratches or rough places created by grit and dirt. If deep scratches or marks are found on rotors or housing, return to the nearest Cummins dealer for repair.

Clean air filters. It is very important that the air filter be kept clean to receive full efficiency from the supercharger and also to prevent any damage. An inspection of the supercharger intake should be made to determine whether or not the oil from the air filter is being pulled over into the supercharger. This can be caused from overfilling of the air cleaner oil cup and overspeeding of the engine.

Leaking oil seals. To check for leaking oil seals, operate at idling speed for a few minutes.

Warning: Before starting engine, be sure to remove rags, waste or any loose parts that are within range of supercharger suction.

Stop engine and examine inside of end-plates. Leaking seals will allow a film of oil to radiate out from the rotor shafts on these end-plates.

Note: It is very important that you do not confuse leaking oil seals with oil being pulled over from air cleaners.

Loose drive couplings. Check for loose drive couplings at low engine speed. Since the gears have only a slight amount of back lash, it will be very easy to detect any looseness in the coupling.

Complete overhaul. It is recommended that the supercharger be removed from engine and be completely dismantled every 60,000 miles or 3,000 working hours regardless of previous inspection. It is very important that all oil seals and bearings be replaced at this time. If further work is necessary on the supercharger, return it to the nearest Cummins dealer.

Tools for overhaul. In addition to the hand tools that are available to the average mechanic, certain special tools must be used in replacing bearings and oil seals in•the supercharger. It is recommended that tools similar to those illustrated in the following text be used.

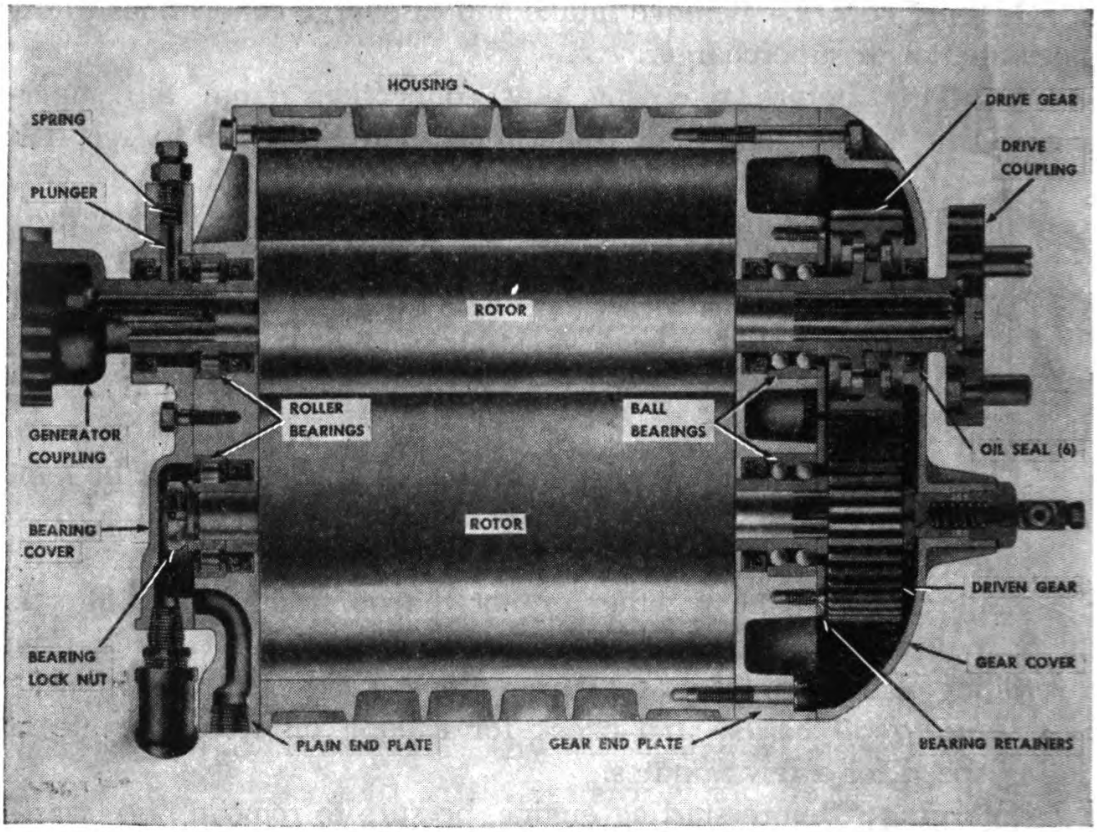

Fig. 5. Cross Section of Supercharger

Disassembly of Plain End-Plate. 1. Remove supercharger from engine.

2. Remove generator drive sprocket with special puller shown in Fig. 6.

3. Remove lubricating oil line.

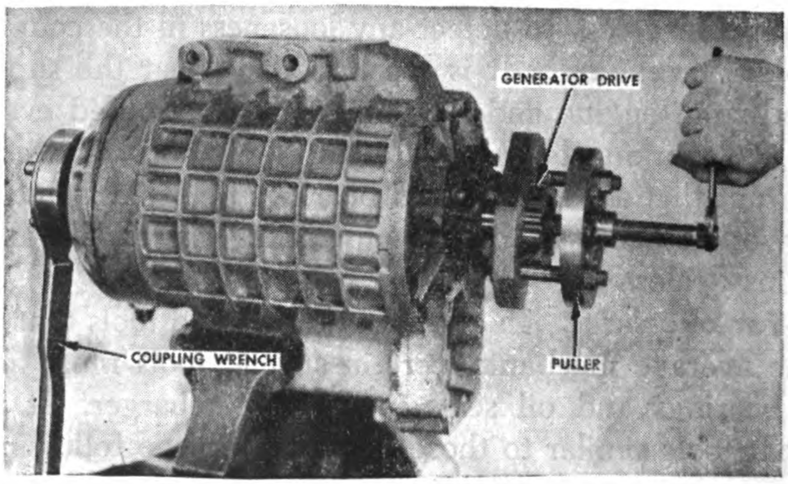

Fig. 6. Pulling Generator Drive Sprocket

4. Remove lubricating oil inlet fitting, spring and metering pin or plunger as shown in Fig. 5.

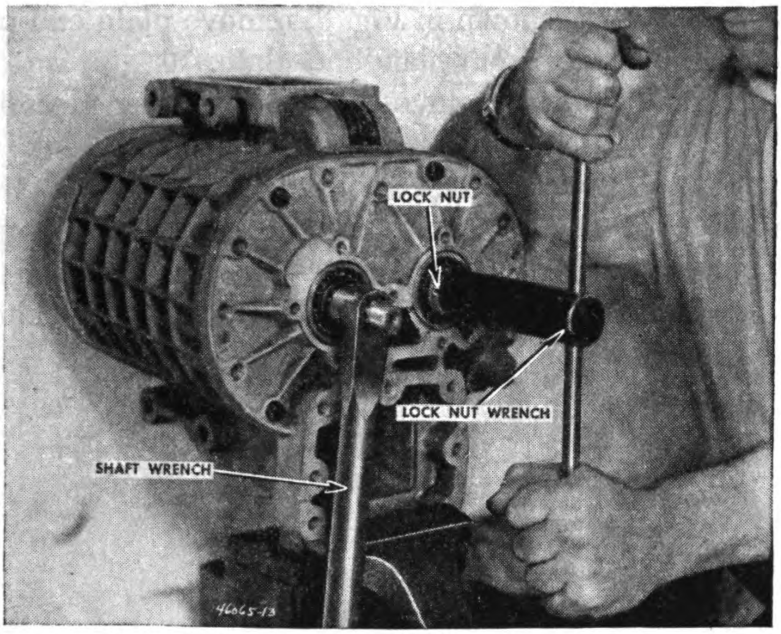

Fig. 7. Removing Lock Nuts

5. Remove cap screws from bearing retainer and take off retainer.

6. With small screwdriver, raise the ear of the locking washer from the bearing locknut.

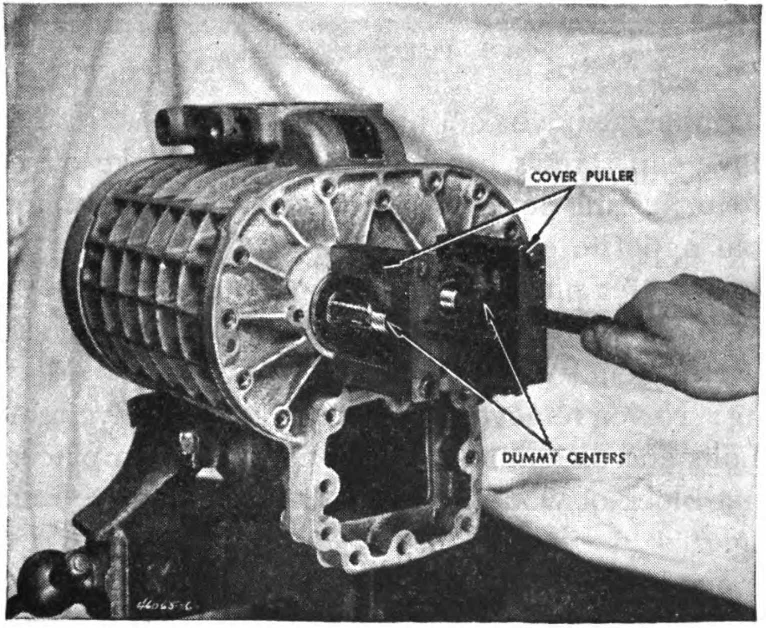

Fig. 8. Pulling End-Plate

7. With special tool, hold shaft. With wrench shown in Fig. 7, remove nut.

8. Remove cap screws from plain end-plate.

9. With pullers, as shown in Fig. 8, remove plain end-plate.

10. Remove bearings from plain end-plate.

11. With small punch, remove the bearing inner races from each shaft.

12. With small punch, tap oil seal from plain end-plate.

Disassembly of Gear End-Plate. 1. Remove drain plug from bottom of gear end-plate and drain oil.

2. With small screwdriver, raise the ear of the locking washer from the coupling locknut.

3. With special wrench, remove nut from shaft.

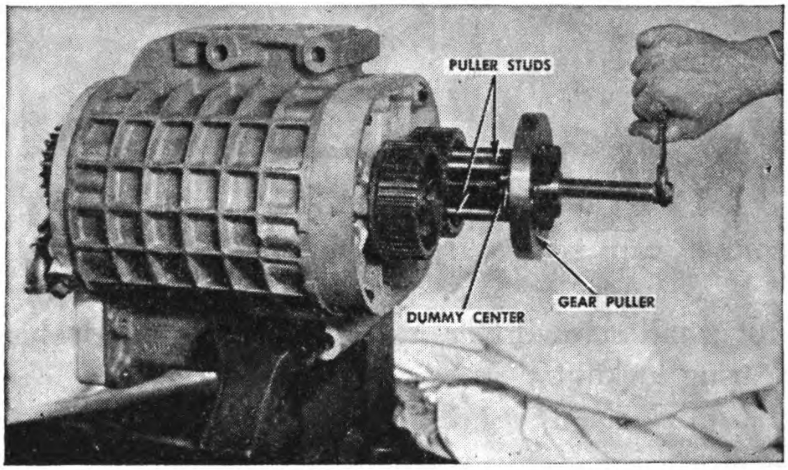

Fig. 9. Pulling Drive Gear

4. With puller, remove coupling from shaft.

5. Remove cap screws from gear cover and take off cover.

6. Remove bearing locknut and washer in same manner as nut removed from opposite end of shaft.

7. Remove cotter pins and nuts from gear bolts.

8. Assemble puller studs to bolts and pull gears as shown in Fig. 9. **Caution:** Remove idler gear first.

Warning: Never remove gears from hub. Always remove puller studs from bolts and assemble nuts and cotter pins in place.

9. With a block of wood tap ends of rotor shafts to remove rotors from housing.

10. Remove Allen head screws and cap screws from gear end housing.

11. With a clean block of wood, remove gear end-cover by tapping from within housing.

12. Remove flat head screws from bearing retainers and remove retainers.

13. Tap bearings from gear end-cover.

14. With small punch, remove oil seals from gear end-cover.

Service and Assembly of Supercharger. 1. Wash all parts thoroughly with kerosene or mineral spirits. **Warning:** Do not use any washing solution that is harmful to aluminum.

2. Inspect inside of housing for burrs and scratches.

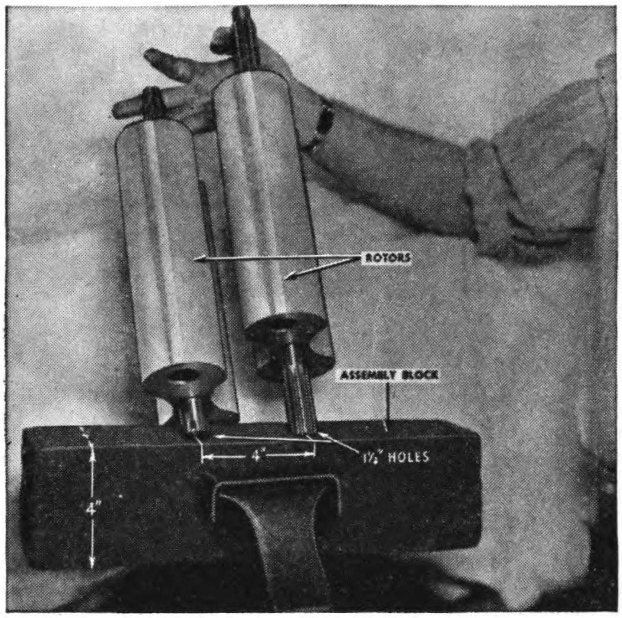

Fig. 10. Supercharger Rotors

3. Inspect rotors, end-plates and shafts for cracks, abrasions and cuts.

Note: If housing, end-plates and rotor assemblies are worn or scratched excessively, return the supercharger to your nearest Cummins dealer for repair.

4. Assemble rotors to a block of wood as shown in Fig. 10.

5. Assemble new oil seals to gear cover with sealing lip pointing away from rotor. **Caution:** Always use new oil seals when repairing supercharger.

6. Assemble gear cover to shaft as shown in Fig. 11.

7. Assemble new bearings to shaft and cover as shown in Fig. 12, with bearing name out. **Caution:** Always use new bearings when repairing supercharger.

8. Assemble bearing retainers to housing with lock washers and flat head screws as shown in Fig. 13.

9. To check clearance between rotors and gear cover, place temporary assembling spacers to shafts and tighten in place as shown in Fig. 13.

10. With feeler gauge check clearance between rotor and gear cover. **Caution:** This clearance must be from .006″ to .008″. If excessive clearance is present, use thinner spacers between ball bearing and rotors. If clearance is too little, use thin shim washers to obtain proper clearance. Do not proceed further in assembly until .006″ to .008″ clearance is obtained. (Fig. 14.)

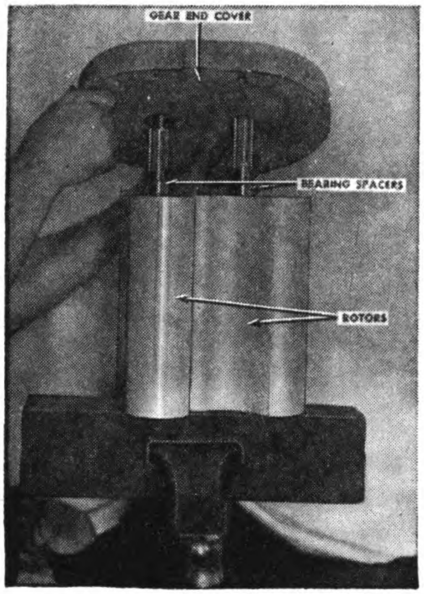

Fig. 11. Gear End-Plate

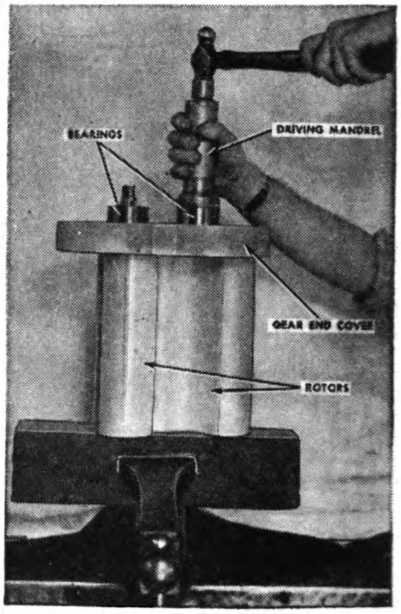

Fig. 12. Installing New Bearings

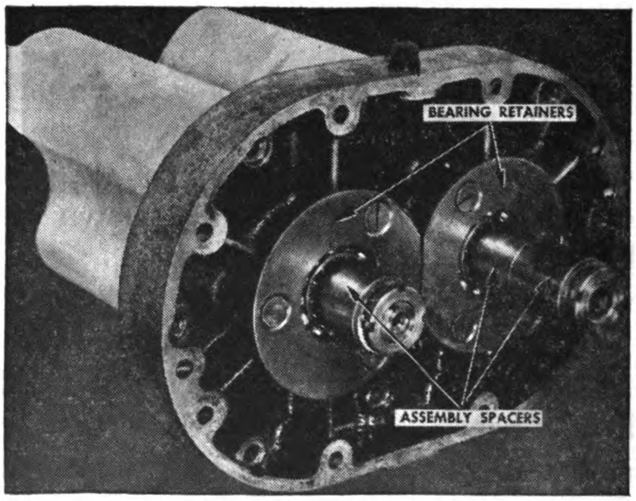

Fig. 13. Bearing Retainers

11. Assemble rotors and gear cover to housing and secure in place with Allen head cap screws and lock-washers.

12. Assemble oil seals to plain end-plate with sealing lip pointing away from rotor.

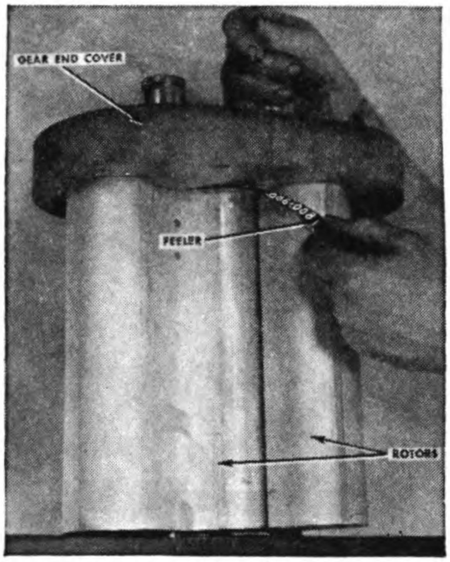

Fig. 14. Gear End-Plate Clearance

13. Assemble plain end-plate to housing over dowel pins and secure in place with lockwashers and cap screws.

14. Assemble bearings to shaft with bearing name out.

15. Check rotor end clearance as shown in Fig. 15. This clear-

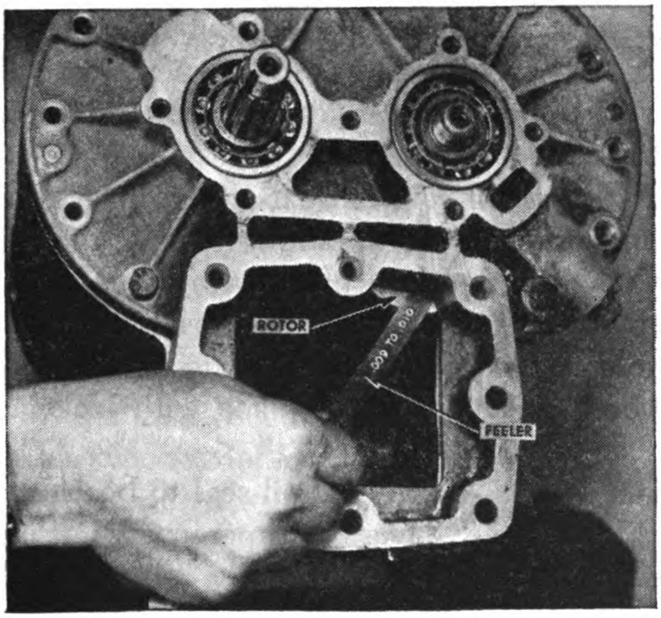

Fig. 15. Plain End-Plate Clearance

ance must be from .009″ to 010″. **Caution:** If this clearance cannot be attained, return supercharger to nearest Cummins dealer for repair.

16. Assemble gears to shafts with timing marks in correct position as shown in Fig. 16. **Note:** In earlier superchargers, the letter "x" was used for timing marks. **Caution:** Press on drive gear first. When pressing on gears always rest on opposite end of shaft.

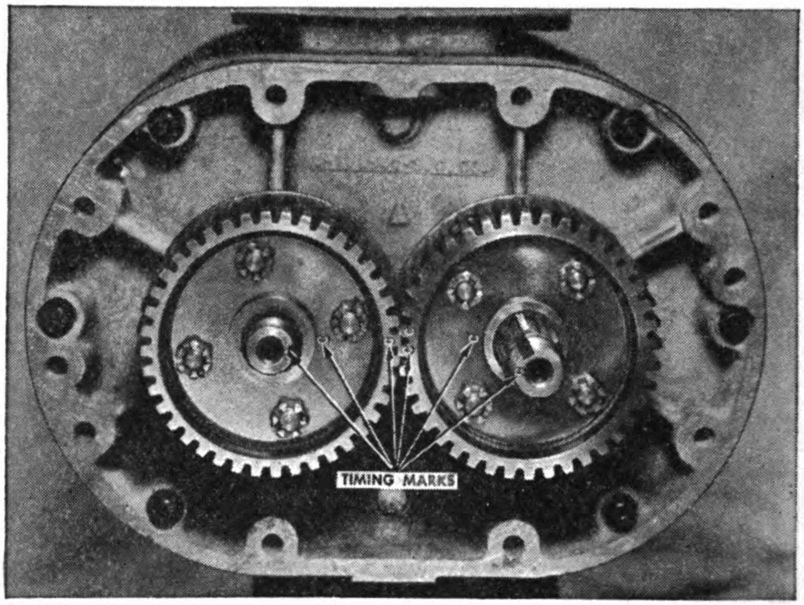

Fig. 16. Timing Marks

17. Assemble clamp washer and lockwasher. Tighten in place with shaft nut. Bend over ear of lockwasher into locknut groove. **Caution:** Make certain that shaft does not extend more than 1/16″ beyond locknut, otherwise the oil plunger operation will be impaired.

Note: If new rotor assemblies or gears are necessary, return supercharger to nearest Cummins dealer.

18. Assemble new oil seal to gear cover, flush with outside face of cover. Sealing lip should be pointing toward rotors.

19. Assemble spring and oil plunger to cover in correct position, making sure small hole in bottom of plunger is clean.

20. Assemble cover to supercharger using non-hardening gasket cement on cover gasket. Secure in place with lockwashers and cap screws.

21. On plain end assemble new oil seal to bearing cover.

22. Assemble bearing cover to supercharger using new gasket and non-hardening gasket cement. Secure in place with lockwashers and cap screws.

23. Assemble oil regulating pin to bearing cover. Assemble spring and oil supply fitting in place and assemble oil line to supercharger.

24. Press generator drive coupling to shaft. **Caution:** When pressing on coupling always rest on opposite end of shaft.

25. Lock in place with clamp washer and lockwasher and then tighten nut.

26. Check plain end-plate clearance, as shown in Fig. 15. Manually rotate rotors to check for possible incorrect assembly.

Installation of Supercharger. 1. At all times before final connection of outlet and inlet ends of manifolds to supercharger, the ports should be kept covered. Masking tape may be used. Do not stuff rags into inlet or outlet ports at any time as they might be left there on assembly to engine.

2. It is important that the ports be kept closed as foreign matter or loose parts may enter, in which case damage will be caused when the supercharger is started.

3. Care must be given to the tightening of the mounting bolts of the supercharger. Extreme tightening will cause distortion in the housing which will cause rotors to scrape. When installing the supercharger on the engine, the coupling flanges should mate properly, as excess misalignment might cause damage to the supercharger.

4. Lift supercharger tc engine and engage coupling.

5. Start the upper left and lower right bolts to support the supercharger.

6. Start and tighten the upper right and lower left support bolts.

Note: The upper right and lower left bolt holes in the supercharger are reamed holes, and fit the support bolts snugly. A slight coating of oil on the bolts will ease their installation.

7. Tighten the other two support bolts.

8. Replace coupling chain.

9. Install generator. Make sure generator and supercharger couplings are properly aligned.

10. Install intake manifold in place, making sure expansion joint is properly assembled.

11. Tighten manifold clamps.

12. With gasket, assemble supercharger intake tube to supercharger, and tighten down with washers and nuts.

13. Reconnect drain tubes and drain cock spring.

14. Reconnect oil supply tubes.

15. Reconnect vapor tube to rocker housing.

16. Install air cleaner.

Fig. 17 shows the camshaft timing diagrams.

(2) **CENTRIFUGAL BLOWER.** (a) As this type of blower with mechanical drive is not used in locomotive service we shall not refer to it further.

(b) *Turbo-Charger.* This type of blower and drive is extensively used in locomotive service and primarily on American Locomotive Diesel engines. (See Fig. 18.) Therefore a complete description of this particular type of charger is given herewith.

The exhaust gas turbine blades are on the left portion of the shaft, Fig. 19, while the centrifugal blower is on the right end of the shaft.

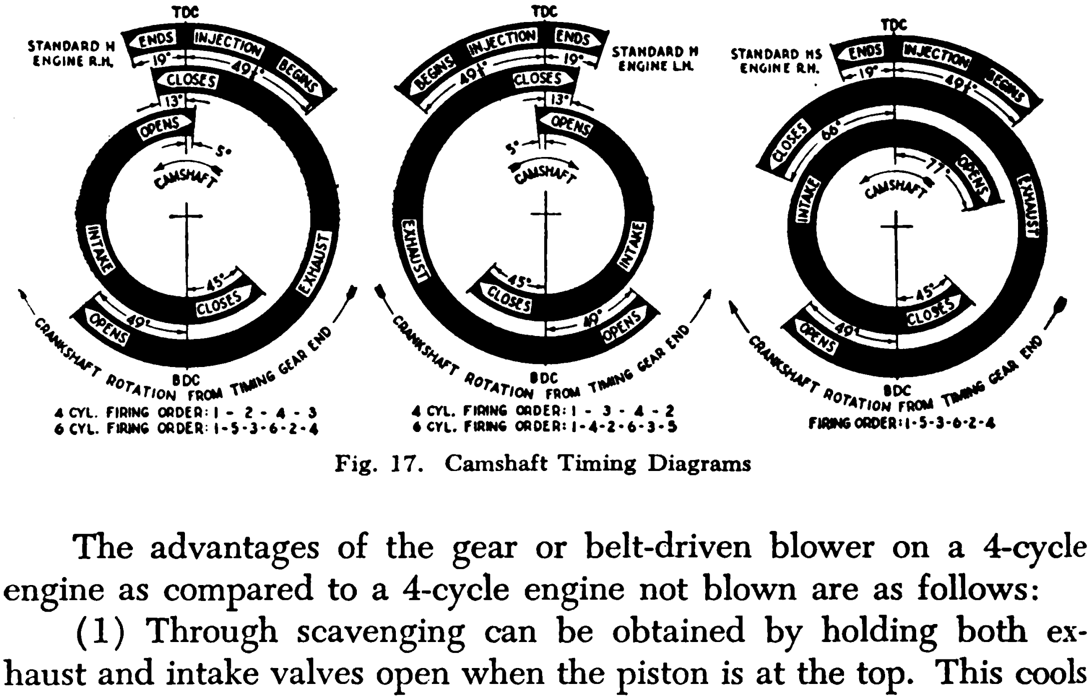

Fig. 17. Camshaft Timing Diagrams

The advantages of the gear or belt-driven blower on a 4-cycle engine as compared to a 4-cycle engine not blown are as follows:

(1) Through scavenging can be obtained by holding both exhaust and intake valves open when the piston is at the top. This cools the piston and valves, insures pure and cooler air in the combustion chamber eliminating all unburnt hot gases.

(2) By forcing more air into the combustion chamber the normal sea level rating can be obtained if the engine is operating at high altitude, as, for example, when working in the high mountains of the West Coast or elsewhere.

(3) Due to (1) and (2) the normal sea level rating can be boosted by this method of blowing 20% to 40% at sea level without increasing the exhaust temperatures or bearing pressures.

(4) Fuel consumption is improved for each horsepower output.

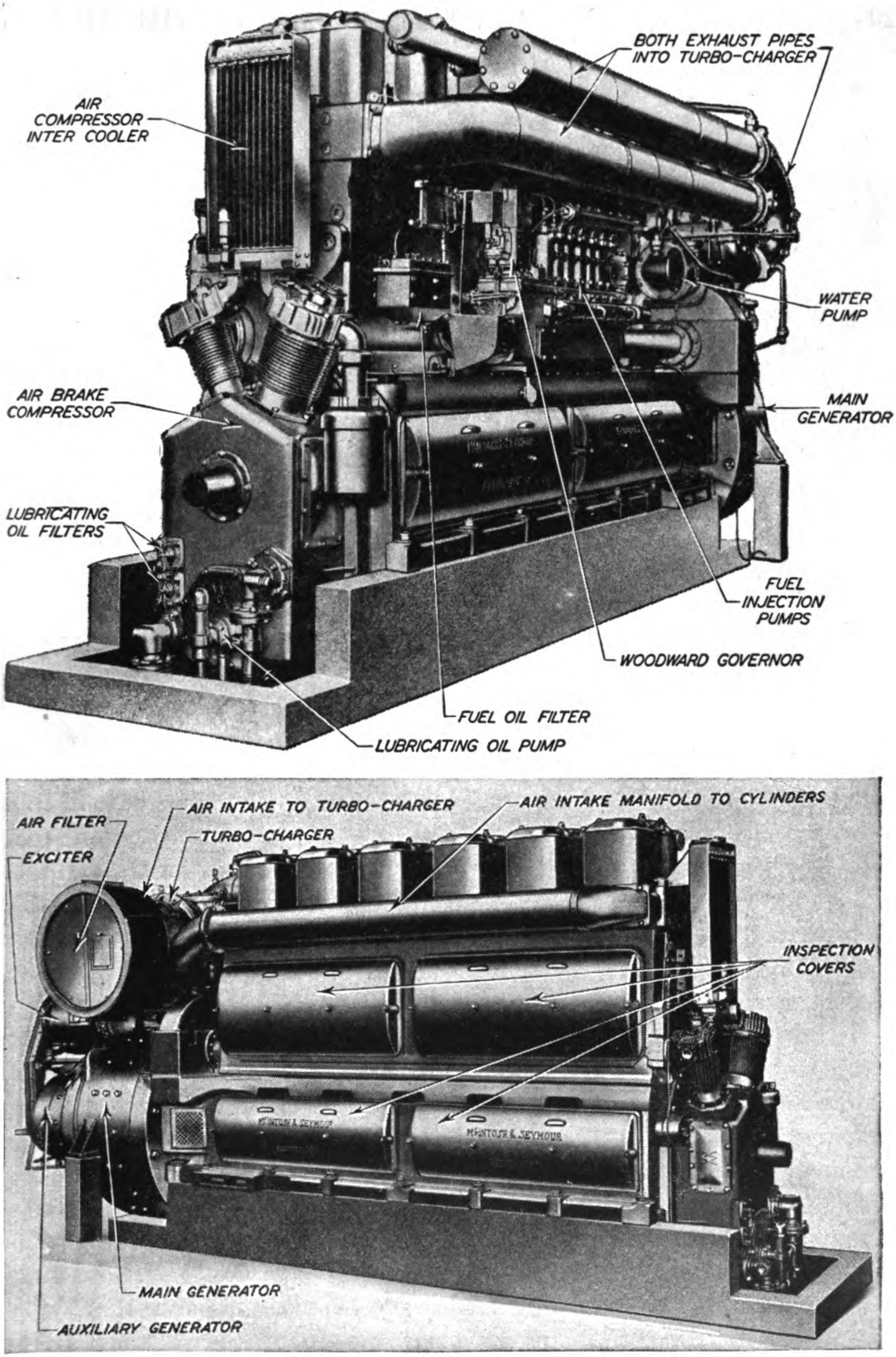

Fig. 18. 1000 Horsepower Diesel Engine. The Top View Shows the Exhaust Pipes into the Turbo-Charger. The Bottom View Shows the Engine Intake Manifold Coming from the Turbo-Charger.

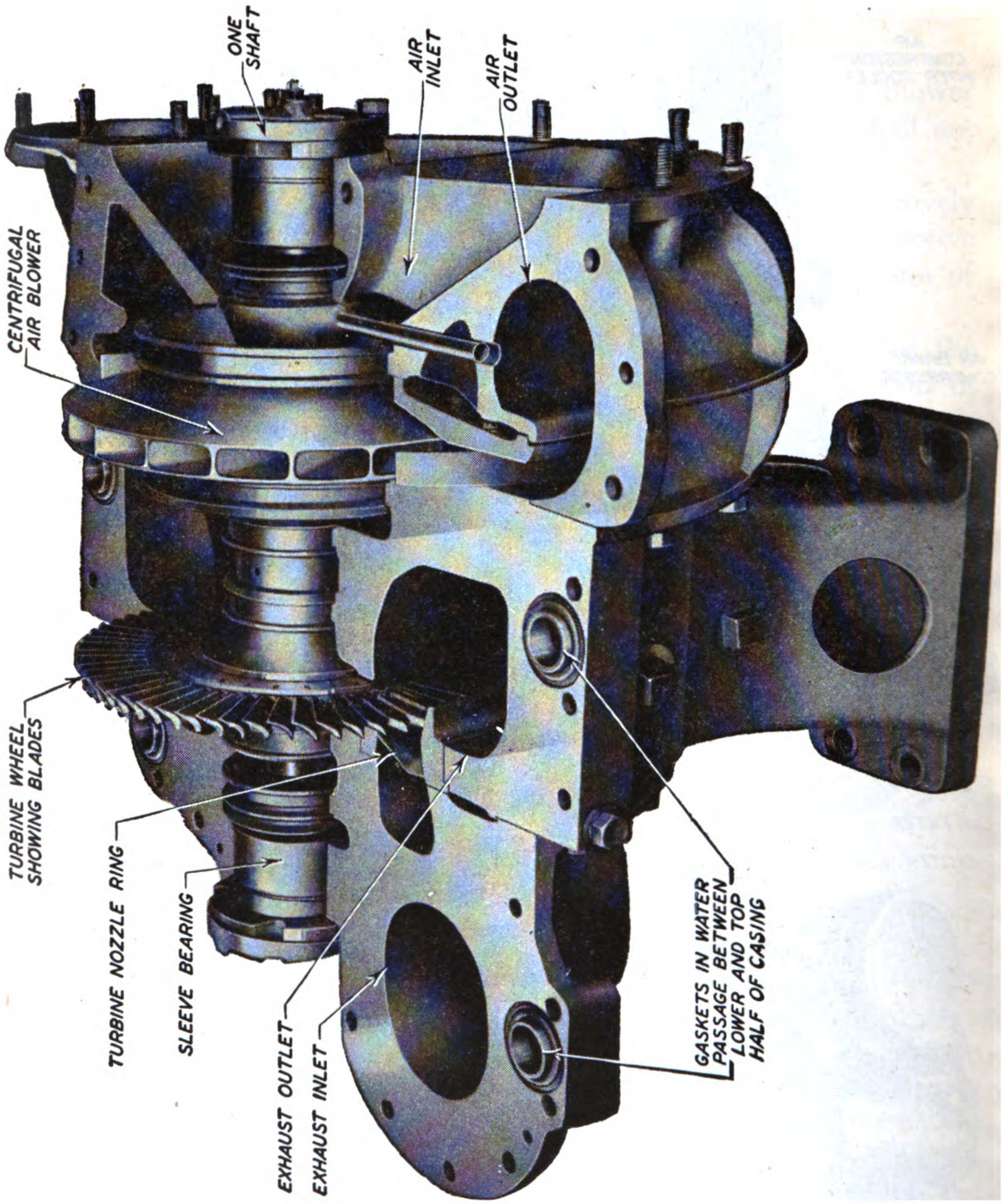

Fig. 19. Section View of Turbo-Charger

(5) Less starting power is required as there is less cubic inch displacement for each horsepower obtained.

In addition to these 5 main advantages, the turbo-charged engine with the Buchi system has the following features:

Item (3) is improved so that the boost in power is 30% to 50% increase.

Item (4) is improved so that the fuel consumption will be better at all loads as compared with other methods of supercharging 4-cycle engines.

(6) Operation is entirely automatically balanced as speed, quantity, and pressure of air follow engine load changes as the turbine blower is driven by the engine exhaust gases.

ALCO TURBO-CHARGER (BUCHI SYSTEM). (See Fig. 19.) This engine is turbo-charged on the Buchi System. The turbo-charger installation was especially developed for locomotive service, where rugged construction and reliable operation are of utmost importance.

Principle of Operation. The operating cycle of the engine is the same as a non-supercharged engine with the exception of the exhaust and suction strokes of the cycle.

The camshaft of the engine is designed to allow the opening period of the air and exhaust valves to overlap to a greater extent than the non-supercharged four-cycle engine. This permits the turbo-charged air to simultaneously clean out the exhaust gases in the cylinder near the end of the exhaust stroke and to cool the combustion chamber of the engine. A much lower pressure in the exhaust manifold than is present in the air manifold is necessary to insure sufficient flow of scavenging air through the combustion chamber, for complete scavenging. This low pressure is attained by providing two exhaust manifolds, each being supplied by three cylinders, which conduct the exhaust gases into the exhaust gas turbine casing at two separate points. By doing this it is possible to have a pulsating pressure which has a minimum value during the period of overlapping of the air and exhaust valves which is much lower than the air inlet pressure. This permits the clean cool air to scavenge the combustion chamber thoroughly.

The scavenging system described above makes it possible to trap a much larger quantity of clean air in the combustion chamber at the beginning of the compression stroke. A larger quantity of fuel oil may be burned, thereby taking fuller advantage of the engine's volumetric capacity than is possible on the non-supercharged four-cycle Diesel engine.

Description of the Turbo-Charger. The turbo-charger consists of a centrifugal blower driven by an exhaust gas turbine. (See Fig. 20.) Both blower and turbine are mounted on a common rotor shaft and separated by a water-cooled diaphragm. Labyrinth glands are provided to seal the individual suction and discharge chambers to prevent contamination and pressure losses.

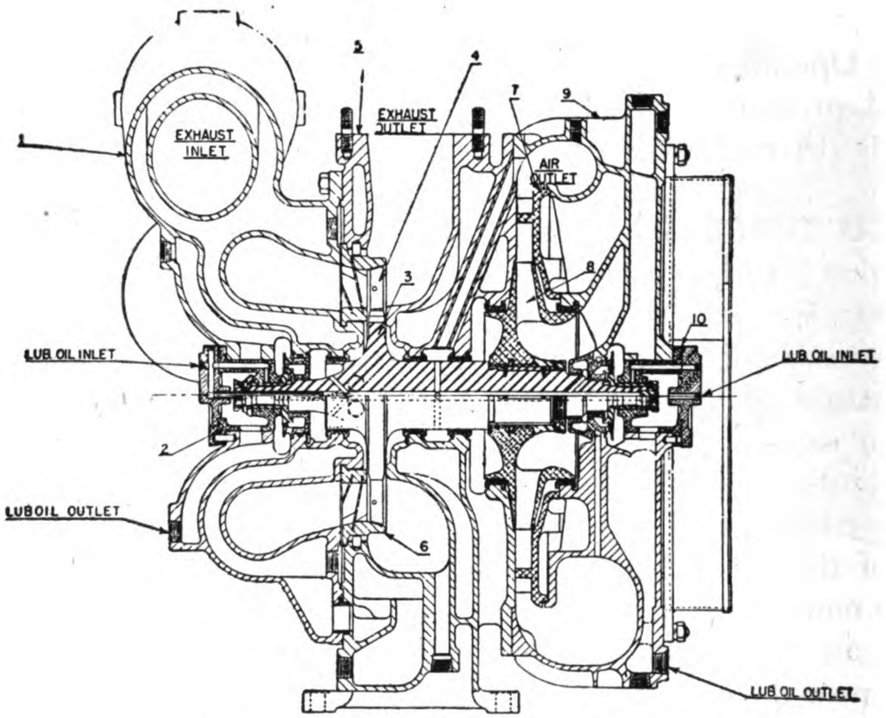

Fig. 20. Turbo-Charger—Longitudinal Section

1. Exhaust Inlet Casing
2. Turbine End Bearing
3. Rotor Shaft
4. Turbine
5. Intermediate Casing
6. Turbine Nozzle Ring
7. Blower Diffuser
8. Blower Impeller
9. Blower Casing
10. Blower End Bearing

The speed of the turbo-charger is dependent upon the volume of exhaust gases produced by the engine. Consequently, the turbo-charger is directly controlled by the load on the engine, and the automatic control of the turbo-charger is thereby provided.

The blower casing is divided at the centerline of the shaft into upper and lower halves. The casing is bolted securely to the other parts of the turbo-charger housing. One of the two rotor shaft bearings is carried in a housing mounted in the blower casing. The impeller is housed in a suitably shaped space in the blower casing, and the outer rim of the impeller is surrounded by the stationary bladed diffuser. Axially converging entrance passages surround the bearing housing. The air flows from these passages into the impeller and is discharged radially from the impeller to the diffuser. The blades in the diffuser are shaped to decrease the velocity of the air and at the same time increase its pressure. The air discharged radially from the diffuser is collected in a spiral chamber and delivered to the air manifold of the engine through the discharge flange. This flange and the spiral chamber are part of the blower casing.

Exhaust Turbine. The central portion of the turbo-charger is made up of two castings, with the dividing line on the horizontal shaft centerline. The lower half has an integrally cast foot for mounting the entire assembly on its foundation. A large opening in the upper half provides the connection to the exhaust stack. On the exhaust side a nozzle ring is mounted which serves to direct the exhaust gases against the turbine blades at the proper angle.

The turbine blades rotate within the rim of the nozzle ring. Gas from the nozzle ring flows across the blades and leaves the blades in an axial direction. The collection and discharge chamber which is part of this central portion is provided with water-cooled walls throughout

The turbine consists of a forged steel, one-piece shaft, mounted in bearings at each end. The air impeller, described above, is fitted near one end of the shaft. The turbine rotor is a large integral flange, near the other end of the shaft in which the turbine blades are fitted and locked. A lashing wire passes through a hole in each blade and is silver soldered in place. The wire is made in several lengths so that groups of 3, 4, or 5 blades are independent of adjacent groups.

The turbine nozzle ring is divided at the horizontal centerline and has a flange on the exhaust inlet casing side which fits into a counterbore in the intermediate casing. There is a small clearance between this flange and the exhaust casing. There are two separate nozzles in this assembly which are independently connected to the upper and lower exhaust manifolds, respectively, through passages in the exhaust inlet casing. In each of the nozzle ports there are eight cast-in steel vanes.

Exhaust inlet casing. This casing is provided with suitable passages for conducting the exhaust gases from the manifolds to the nozzle ring. It is made of cast iron and is water jacketed. In assembly, the casing halves are bolted together at the horizontal centerline and also to the intermediate casing. The exhaust end shaft bearing is carried in a housing mounted in this casing.

Turbo Air Filter. To prevent contamination of the air delivered to the engine, the blower intake is fitted with a filter. The filter consists of elements saturated with oil to which any foreign elements fine enough to get into the filter will adhere. To insure the proper intake volume and cleanliness of the blower passages, the filter must be cleaned at regular intervals, depending upon the type of service and operating conditions.

The filter should be removed from the engine and the elements thoroughly washed with kerosene or fuel oil, and then saturated with SAE 20 or 30 lubricating oil.

Bearings. The rotor is carried at both ends by sleeve bearings. The bearing at the turbine end is a combined supporting and thrust bearing for fixing the axial position of the shaft. The bearing at the blower end is arranged to allow the free heat expansion of the shaft. The journals are hardened steel sleeves, which may be replaced readily.

Labyrinth glands of nickel or aluminum are provided throughout to prevent the contamination of the gases and bearings. The bronze glands, which seal the shaft areas are machined in the form of a bushing making replacement a simple matter.

Adjustment Data

Volume of indrawn air, measured in suction branch	3000 Cu. Ft./Min.
Suction temperature, measured in suction branch	84 F.
Suction pressure, measured in suction branch*	—.32 psi approx.
Charging pressure, measured in delivery branch*	5.0 psi approx.
Approximate blower speed at full load	10,300 r.p.m.
Approximate blower speed at engine idling speed	2,200 r.p.m.
Maximum blower speed	13,000 r.p.m.
Maximum pressure of exhaust gases after turbine*	—.2 psi
Approximate exhaust gas temperature after exhaust valves	850 F.
Approximate exhaust gas temperature before turbine	950 F.
Maximum allowable temperature before turbine	1050 F. continuous 1100 F. momentary

*Gauge Pressure

Clearances

Bearings:	Running	.006″ to .008″
	Thrust	.004″ to .005″
Shaft:	Radial Clearance	
	Labyrinths, turbine end bearings	.009″ to .011″
	Three Center labyrinths	.009″ to .011″

	Two Blower hub labyrinths	.009″ to .011″
	Oil Slinger	.015″ to 020″
ower Impeller:	Axial clearance between impeller and center housing	1/16″
haust Turbine Impeller:		
	Radial clearance	.018″ to .022″

Operation and Maintenance. On inspection check the following:

1. The blower speed. (The maximum allowable speed is marked the turbo-charger name plate.)

2. The sections of the air intake filter are to be cleaned every week as needed.

3. Check air pressure at full load. For the proper temperatures, essures, and speeds, see *Adjustment Data.*

4. The free running time of the rotor, after stopping the Diesel gine, should be checked from time to time. This is an indication of e condition of the bearings. The free running time from 2200 r.p.m. ngine idling) to a standstill is approximately 2.8 to 3.00 minutes.

If the blower speed, or the charging air pressure drops under the rmal values, or if the temperature of the inlet exhaust gases at rmal load with pressure charging, exceeds the maximum allowable mperature for continuous running, immediately reduce the engine eed and ascertain the cause of the trouble. This may be due to:

1. Failure of the fuel injection system or other trouble with the iesel engine (i. e., leaky exhaust valves, excessive piston blow-by, c.)

2. Losses from leaky joints in air delivery piping.

3. Losses in the exhaust gas piping between the Diesel engine and e turbine.

4. Excessive restriction in the air filter.

5. Troubles with the blower assembly. (Bearing troubles, rubbing packing gland or turbine wheels, etc.)

6. Or look elsewhere, such as a poor connection in the generator ld resistance, or slipping of exciter belts.

If the turbo-charger vibrates abnormally, the cause should be und immediately and rectified. The vibration might be caused by disturbance of the rotor balance combined with too big a clearance the bearings. A slight bend in the shaft or variation from normal of similar nature may be responsible.

Lubrication. The turbo-charger bearings are lubricated by oil ken directly from the engine lubricating system.

Packing glands are provided around the inlet pipes at the turbo-charger bearing covers. The oil is drained from each bearing into the engine and recirculated through the system.

Dismantling. The turbo-charger should be dismantled only by a competent mechanic.

Before attempting to dismantle the turbo-charger, the cooling water is to be drained and all the lubricating oil piping is to be dismantled. The two exhaust pipe connections must be disconnected and the stack connection removed. Clear space above the turbo-charger is essential. Remove the turbo-charger from the locomotive for disassembly. The two shaft end covers may now be removed. Remove all the bolts along the joint on the horizontal centerline. The three sections of the upper casing may now be removed as one unit by lifting straight upward with the two eyebolts provided for this purpose.

This operation will expose the turbine wheel and blower impeller, all the upper labyrinths, diffuser, and nozzle ring for inspection. Most inspections and repairs can be made from this condition.

To remove the turbine end bearing, it is necessary to remove the shaft end nut, lockwasher and thrust washer. The bearing may then be gently removed axially. If done easily the shaft will sink onto the labyrinths with no damage.

To remove the blower end bearing, simply remove the shaft end nut and lock nut and slide the bearing out axially. If done smoothly and easily the shaft will sink onto the labyrinths without damage. When both bearings are removed the shaft and rotors can be lifted out of the lower casings.

In order to remove the nozzle ring and diffuser halves, it will be necessary to unbolt the outer casing halves on each side of the center section. The nozzle ring and diffuser can then be removed without further dismantling. Ordinarily it will be unnecessary to remove either of these parts.

Inspection of Vital Parts. The blower should be dismantled at each annual inspection. The following points should be carefully checked:

Blower. Does the impeller fit firmly on the shaft and are there any signs of contact on the outer periphery or on the inlet ring?

Rotor shaft. Are there any signs of contact caused by the labyrinths? Pitted running surfaces should be refaced. The surfaces under the labyrinth glands are to be examined at least once a year for corrosion.

Turbine wheel. Are any of the blades broken or bent, and are the inlet edges still sharp? Have the blades become badly worn, or has the wheel been touching any point? Is there any sign that foreign matter has passed through the wheel? If blades are damaged in any way the complete rotor should be returned to the manufacturer for rebalancing.

Nozzle ring. Has the ring a firm fit and has it warped? Are there any signs of contact with the tips of the turbine wheel blades? Is there any foreign matter lodged between the nozzle plates, and have any plates worked loose, been burned, cracked, or bent? If any of the plates are bent or broken, these should be inspected by a qualified man, and also have rotor rebalanced by the manufacturer.

Bearings. Is there any discoloration of the bearings due to overheating? Are any defects visible or do the running surfaces indicate that foreign particles have been rolled in them? Are the bearings receiving sufficient lubrication and are there any signs of excessive wear? Check the running clearances of the bearings to the proper figures given under *adjustment data.*

Labyrinths. Check the labyrinths to see if any dirt has entered and see if the clearance has been affected by wear or corrosion by exhaust gases. Have any of the rings been bent or damaged in service, or when assembling? The impeller labyrinth rings should be inspected to see if the sealing air inlet is clean and correct.

Diffuser. The diffuser is to be checked for cleanliness, position, and general condition. Be sure that the diffusers are correctly fitted with reference to the direction of rotation of the impellers.

Casings. Check the turbine and impeller casings for any signs of leakage or large accumulations of dirt caused by oil, water, scale, or dust.

Reassembling. To reassemble, reverse the procedure described under *Dismantling* taking care in the handling of the rotor to prevent damaging of the labyrinths. After replacing the shaft and bearings be absolutely sure to check the thrust bearing clearance at the turbine end. After the three upper casing halves have been replaced be absolutely sure to check the clearance between the turbine runner and the nozzle ring. This is accessible through the stack connection.

The bearings are to be checked carefully at the annual inspection. If necessary, new bearings and sleeves are to be installed.

The neoprene seal rings at the grommets on the turbine side should be renewed annually or at any other time when found in questionable condition, preferably each time the turbo-charger is dismantled.

In replacing the parts, check all clearances. See that all revolving

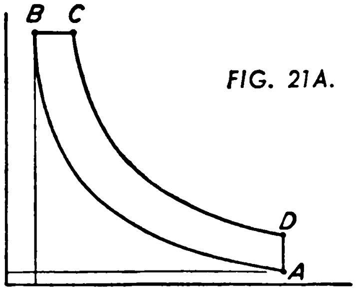

FIG. 21A. ORDINARY DIESEL CYCLE

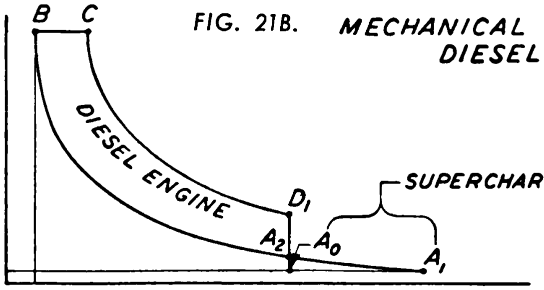

FIG. 21B. MECHANICAL SUPERCHARGED DIESEL CYCLE

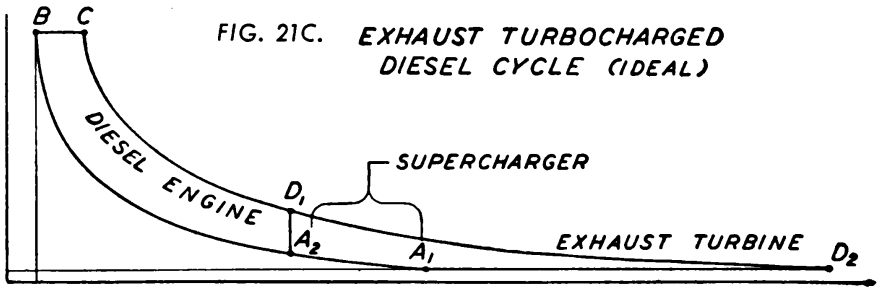

FIG. 21C. EXHAUST TURBOCHARGED DIESEL CYCLE (IDEAL)

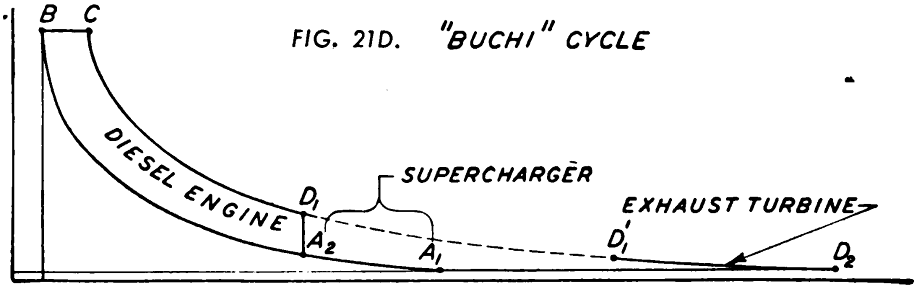

FIG. 21D. "BUCHI" CYCLE

parts are running on true centers. Check the turbine shaft to see that it runs free.

After the turbo-charger is completely assembled it should be tested to the temperatures and speeds given under *adjustment data.*

THEORY OF SUPERCHARGED DIESEL CYCLE. A supercharged Diesel engine works on a similar thermic cycle as an ordinary Diesel engine, except that the low pressure end of the cycle is handled not by the Diesel cylinders but by an auxiliary machine called the *supercharger.* The Diesel engine proper operates only on the part of the cycle with higher pressures and lower volumes. Thus, smaller Diesel cylinder volumes can do the same work, or in turn, a Diesel engine of given size can do more work if operating supercharged. (More air weight per stroke, therefore correspondingly, more fuel can be burned, resulting in more engine power.)

The superchargers operate at the low-pressure large-volume end of the cycle, and are therefore especially adapted to handle large air and gas quantities with the least bulk and weight. Consequently, they are rarely of the cylinder and piston type, but they are usually rotary machines—centrifugal blowers, turbines, or rotary positive displacement types.

Two principal types of Diesel supercharging cycles are in use; depending on whether the supercharging compressors are driven (1) by the engine power or some other (mechanical or electrical) power source; (2) by the exhaust gases of the engine (exhaust turbo-charging cycle).

On the first alternative, (Fig. 21B) part of the expansion period of the complete supercharging cycle is cut off. On the second alternative, (Fig. 21C) the ideal turbo-charging cycle (exhaust gases after engine further expanded in an exhaust turbine which drives the centrifugal air compresser), both the expansion line and the compression line are extended to atmospheric pressure.

The theoretical efficiency of the supercharged Diesel cycle can be computed similarly as that of the ordinary Diesel cycle as follows:

Formula 1 $e = 1 - \left(\frac{1}{k} \times \frac{T_D - T_A}{T_C - T_B}\right)$ Ordinary Diesel cycle

Formula 2 $e = 1 - \left(\frac{1}{k} \times \frac{T_{D1} - T_{A0}}{T_C - T_B}\right) + \frac{T_{A1} - T_{A0}}{T_C - T_B}$ With mechanically driven supercharger (assuming 100% drive efficiency)

Formula 3 $e = 1 - \frac{T_{D2} - T_{A1}}{T_C - T_B}$ With exhaust turbo-charging

Where e = efficiency
k = 1.406 for pure air, use 1.35 for Diesel engine application.
T = Temperature in degrees Fahrenheit absolute at points $D1$, $A1$, etc.

Therefore, if the combustion pressure is the same in all cases, the thermic efficiency is, compared with the efficiency of the non-supercharged Diesel cycle, better with exhaust turbo-charging and less with mechanical supercharging.

In practice, supercharged engines have higher mechanical efficiencies than non-supercharged engines, because of the smaller engine size per horsepower output. This results in higher total efficiency of the exhaust turbo-charged engine, compared with the non-supercharged engine and approximately equal efficiency of the mechanically supercharged engine compared to the non-supercharged engine.

In Europe and to a certain extent in this country the most prominent type of exhaust-turbo-charged Diesel cycle is the *Buchi* cycle (Fig. 21D). There, the exhaust gas turbine does not actually operate at a gas pressure as high as indicated by point *D1,* but the gas pressure is partly converted into velocity immediately when leaving the engine, this velocity being maintained through the narrow exhaust gas pipes between engine and turbine. This feature, in addition to other details of the Buchi system (timed pressure fluctuations in multiple turbine feed pipes) is used for the purpose of keeping at specified moments the exhaust line pressures much lower than the air charging pressures, to enable cylinder scavenging (cooling) in addition to supercharging. The P-V diagram of the Buchi cycle looks like Fig. 21D. If we assume 100% efficiency of the exhaust gas conduits between engine and turbine, that is, complete conversion of the pressure energy between *D1* and *D1'* into velocity energy, then Formula 3 holds true also for the Buchi cycle.

Both principal types of supercharging are used widely to-day. The Buchi cycle, due to its greater efficiency, finds wide application in the field of larger engines. Mechanical supercharging, although less effective, is being used mainly on small engines where its application is relatively inexpensive.

The reason the Buchi supercharging system has a greater efficiency is due to the use of the exhaust impulses, which is explained as follows: The engine exhaust is piped directly to the exhaust turbine, and, at full load, results in a mean pressure of about 2 to 3 pounds per square inch in the exhaust pipes between the engine and the turbine. The energy of expanding this exhaust gas to atmospheric pressure in addition to the velocity energy, resulting from periodically expanding the gases down from approximately 60 pounds per square inch pressure in the cylinder to atmospheric pressure, provides the means of driving the blower. The blower creates an air pressure of about 3 to 5 pounds. This air is piped to the engine through an air inlet header.

In order to clean out or scavenge the cylinder of burned gases and cool the engine parts, the inlet and exhaust valves are made to overlap in their opening for a long time at the end of the exhaust stroke, which allows the air to blow from the inlet header through the cylinder into the exhaust header, cleaning out all the exhaust gases from the cylinder and cooling the hot engine parts.

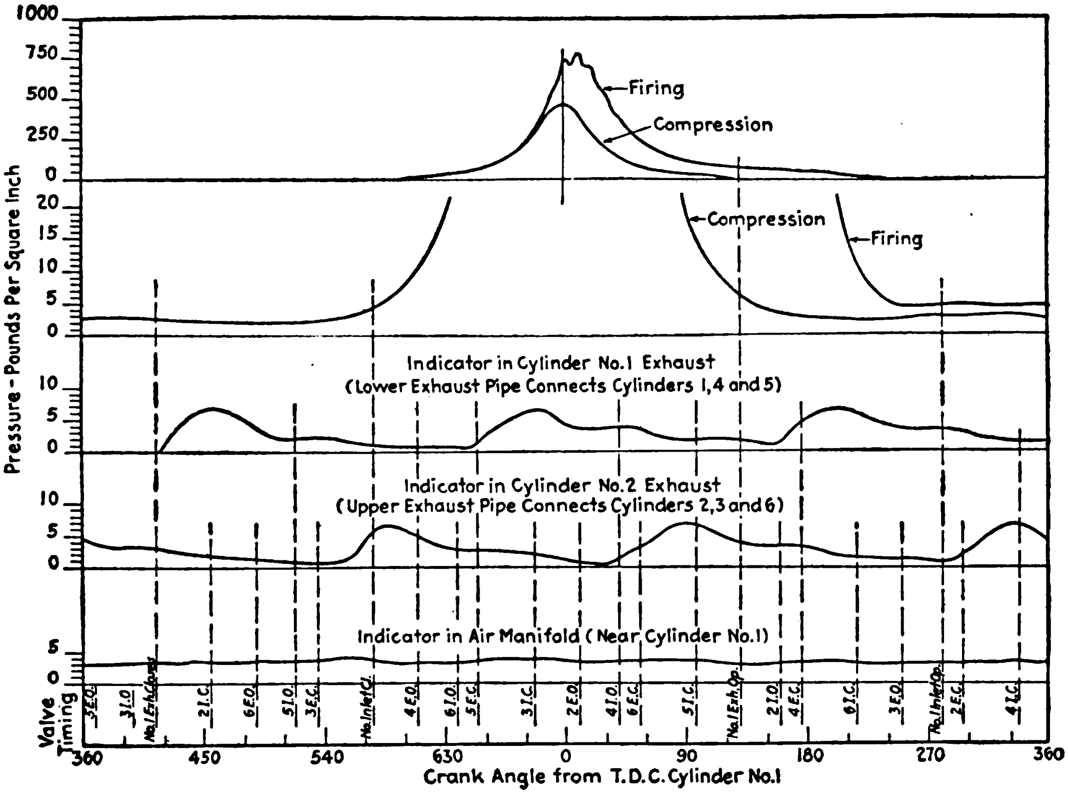

Fig. 22. Group of Indicator Diagrams Showing Various Operating Phases of Supercharged 900 Horsepower Engine. The Charts, from Top to Bottom Are: (1) Maximum Compression and Firing Pressures; (2) Enlarged Portion of Curves to Show Minimum Pressures; (3) and (4) Curves, Indicator Pressures in Exhaust Manifold though a Full Cycle Range (two engine revolutions) and (5) Resultant Air Pressure in Air Manifold—This Pressure Is an Average of (3) and (4) Combined

A mean pressure difference of from one to two pounds per square inch exists between the inlet and exhaust pipe. This would not allow a complete scavenging of the cylinder in the small time available. Therefore, in order to assure more effective scavenging, the pressure in the exhaust pipe is made to pulsate so that during the period of scavenging the pressure in the exhaust manifold is very much reduced. This creates a pressure difference between the inlet and exhaust pipe of not one pound but very much more, and results in a violent rush of air through the combustion space from inlet to exhaust manifolds. This pulsation is accomplished by having a multiplicity of exhaust pipes connected to separate turbine nozzles.

A study of the graph in Fig. 22 showing the valve timings, air inlet, and exhaust pressures will clearly show the relation of one feature with the other.

In order further to insure complete scavenging of every part of the combustion chamber, this must be made so that the air sweeps through the entire chamber in passing from the inlet to the exhaust manifold.

In practice, Diesel engines show certain variations from the ideal Diesel cycle. The ideal Diesel cycle—combustion and constant pressure—is most closely approached by large slow-speed engines. With higher engine speeds, the time available for injection, atomization, and combustion of the fuel becomes very short and makes it increasingly difficult to control the pressures such as to obtain a constant pressure from the beginning to the end of the combustion process. Instead, the combustion generally starts violently after some delay, then keeps on well controlled, and finally peters out. This causes a pronounced initial pressure rise, followed by a period of fairly constant pressure, and then a gradual pressure drop (after-burning), blending into the final expansion period. After-burning is an undesirable feature, and is to be avoided. Good Diesel engines have the combustion take place as much as possible during the two initial stages of rising pressure and constant pressure.

Chapter 14

Air Filtration and Auxiliary Equipment

Originally raw air from the atmosphere was drawn into an engine cylinder without any attempt to clean it of dirt and grit.

Dust, grit, or any foreign matter carried with air into an oil engine during the suction or scavenging period is one of the main causes of fouled valves, wear of piston rings, and cylinders. Air filters are particularly advisable in power plants where dust and grit are present in the atmosphere, as in stone-working and mining localities or near highways with heavy traffic. In such places from 0.1 to 5.0 grains and more of dust per 1,000 cubic feet of air can be found. This amount of air going every minute through a 300 horsepower oil engine, for example, gives some conception of the amount of abrasive matter which will ultimately enter the engine. Wear is increased and lubrication impaired. Even in localities where the air seems to be free of dust, an air filter will show a surprisingly high dust content. It is impossible to over-emphasize the need of air filtration for any oil engine installation.

FILTER REQUIREMENTS. The requirements which an air filter must fulfill may be listed as follows:

(1) Small resistance to the passage of air without reduction in the volumetric efficiency of the engine.

(2) High efficiency, that is, dust retaining capacity, with a design which insures that particles of the filtering material cannot get loose and be sucked into the engine.

(3) Ease of cleaning.

(4) Ability to operate without constant attention of excessively frequent cleaning intervals.

(5) Small space, compact shape.

(6) Moderate first cost. (7) Low operating expenses, if any.

Commercial air filters for oil engines can be divided into three classes: dry, impingement, and wet. Dry filters depend for their cleaning effect upon actual filtration through some screening material—wool felt, steel wool or cloth. Devices for small engines depend also upon centrifugal force created by a rotary motion imparted to the air stream.

DRY FILTER. Fig. 1 shows a dry filter, the *Protectormotor.* It is a star shaped wire frame covered with felt. It is provided with a cylindrical hood having louvres for air admission, the latter being fastened by a bolt with a thumb nut to the suction pipe. Such units are built for capacities from 15 to 250 cubic feet per minute. They can be assembled in special boxes holding from 2 to 20 units, thus giving a capacity up to 5,000 cubic feet per minute, sufficient for a 1,700 horsepower oil engine. A unit of 250 cubic feet capacity has a filter area of 20 square feet, is 17 inches high and has a 14-inch diameter felt insert.

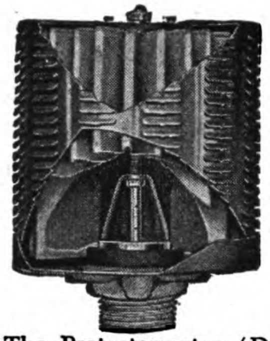

Fig. 1. The Protectormotor (Dry Filter)

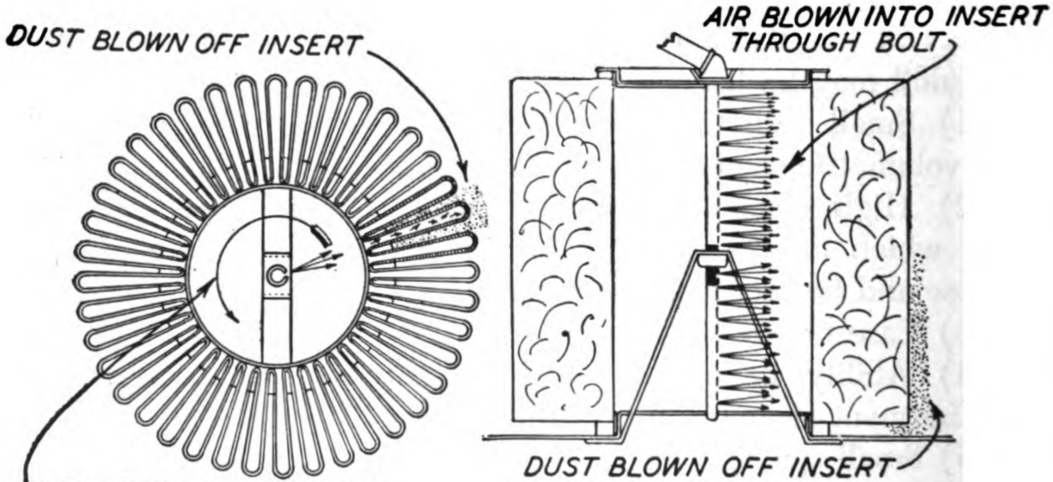

Fig. 2. Method of Arranging Cloth in Filter

A top view and section of a felt insert together with the method of cleaning it are shown in Fig. 2. An air hose is connected to the top of the hollow central bolt, having a number of holes which admit the air into the inside of the filter star. By slowly turning the bolt, with the air turned on, as shown by the arrow, the dust collected on the outer surface is blown off the felt. Following is a summary of the properties of this filter:

The smaller sizes of this filter (Model D) do not have the central air pipe. Cleaning of the filter element is best accomplished, with compressed air, after the element is removed from the case. Best results are obtained by directing the blast from an air gun, along and parallel to the surface of the felt. This loosens the dust without forcing it into the pores of the felt. A final blast of air should be forced into each pocket from the inside, along the entire length of the fins. Gasoline should only be used in more severe cases. Care should be exercised in preventing damage to the feltex filter medium.

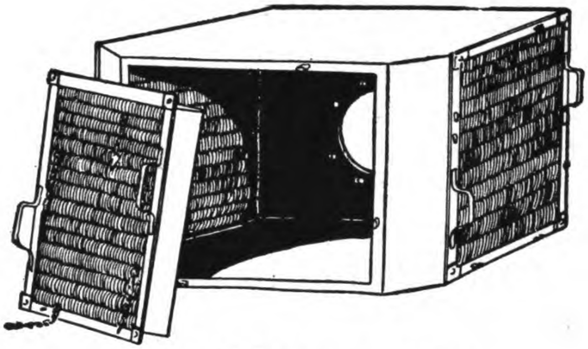

Fig. 3. Oil Impingement Filter

After the inserts have been cleaned thoroughly, they should be carefully replaced, reversing the direction given. It is important that the gasket of the lower insert rests firmly on the supporting base, and that the adjustment nut is in the correct position before tightening locknuts. This should be determined by exerting hand pressure on the retaining cup to a point where the nut can be contacted. Then make sure the cup is firmly locked between the two nuts before the uppermost locknut is tightened down. Replace cover.

With proper care, the insert should give perfect satisfaction for from two to three years. The insert frame may be recovered at reasonable cost, provided the frame is not damaged.

IMPINGEMENT. In the main, filters used on large Diesel engines are the oil impingement type. They generally consist of a frame fastened to a box through which air is drawn into the engine, as shown in Fig. 3. One or more of the walls of the box may be replaced by such frames containing steel wool or equivalent material that is coated with a substantially non-evaporative dust-catching fluid. For a capacity around 150 cubic feet per minute intended for use on a single-cylinder four-cycle engine, such a unit will occupy a rectangular space about 22 inches x 22 inches x 14 inches. For a 6-cylinder, four-cycle engine the same unit could pass 800 cubic feet per minute, owing to the greater uniformity of the air current.

In some of these, steel wool is packed so that the incoming air comes in contact first with looser layers, and then passes through layers progressively increasing in density. The air is broken up into fine streams which change their direction from 12 to 18 times, each change being caused by an impingement of the air upon the steel wool coated with an adhesive oil.

When the filtering material becomes dirty, the complete filter cell is removed from the frame and dipped into a solution of washing soda in hot water. This solution cuts the coating oil together with the dust loose from the filter. The clean cell is then charged by dipping it into the adhesive oil and put back. The filter needs cleaning every 4 to 12 weeks, depending upon amount of dust.

In order to protect both the steel wool and the case from corrosion, the entire cell, after it is completely assembled, is immersed in a bath of molten lead alloy, which also binds the pieces of steel wire together in one coherent mass. The cell receives a heavy coat of enamel and is oven baked.

OIL-BATH FILTERS. Of late, the oil-bath filter, Fig. 4, has received the widest application, especially for the higher speed engines. The filter, of which several designs are available, consists of a tank containing oil and an upper compartment containing steel wool.

When the cleaner is in operation, the dust-laden air enters through the center inlet whose lower end is submerged below the oil level. As the air enters, the oil is forced upward into the screen element which separates the oil from the air and returns it to the oil reservoir. The sudden reversal of air-flow direction removes a large portion of the dust, which is thrown to the bottom of the cup. The air is continually being washed as it passes through the oil in the cup.

Only a portion of the oil is carried up into the screen element, while the balance is held in the outer cup. This oil is practically at rest, permitting the dust to settle to the bottom, leaving the surface oil practically clean. All of the cleaning is done in the oil cup and the lower screens, with the result that the upper screens remain clean.

The action of the air upon entering the screens is to travel toward the outside of the cleaner, automatically washing the screens.

The engine operator is, of necessity, charged with the responsibility of giving the air-cleaner equipment regular and constant attention in accordance with the manufacturer's instructions.

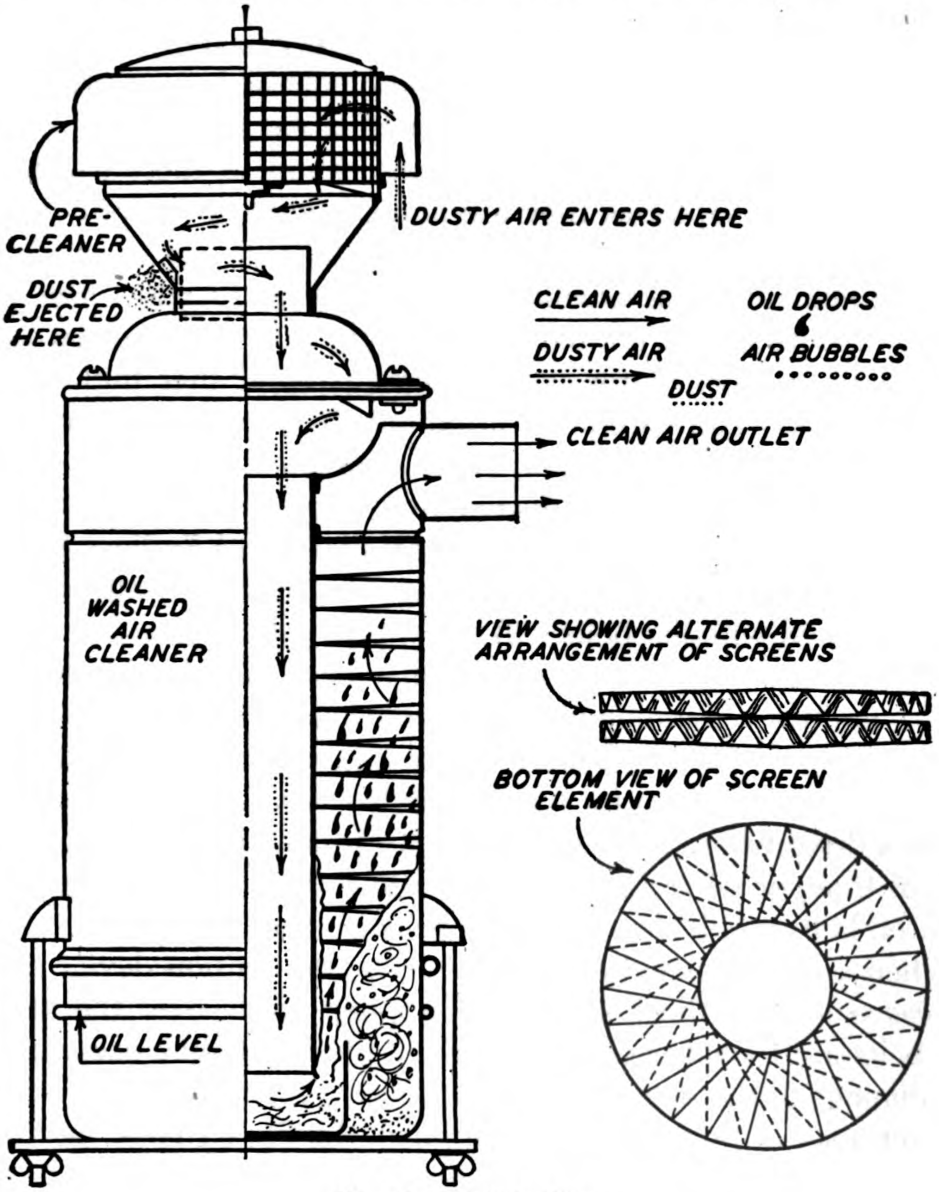

Fig. 4. Oil-Bath Filter

He should service the air cleaner daily by removing the oil cup, emptying the oil, scraping out the dirt and refilling to the oil level bead with engine oil. He should then replace the oil cup securely.

The oil cup should be kept filled as near as possible to the level indicated by the bead with fresh oil of the same grade as is used in the engine crankcase. Raising the oil level above this point does not increase efficiency of the filter and this practice should be avoided.

It is absolutely necessary to change oil and thoroughly clean the cup whenever the level of dirt, accumulated in the bottom of the cup, reaches the half-way mark or the oil appears too thick or heavy to spray properly. The depth of dirt at the bottom can be measured with a stick or screwdriver. Daily inspection is necessary to enable the operator to see when any of these conditions have been reached.

AUXILIARY EQUIPMENT. The auxiliary equipment of a Diesel locomotive consists of a great many items. Many of these will not be discussed in this chapter as they are minor items which apply specifically to certain locomotives only.

Fundamentally, the auxiliary equipment is to assist the main equipment. One should not have the thought that the auxiliary equipment can be neglected, for it is generally found that the auxiliary equipment needs more frequent attention than the main portions of the locomotive. For that reason, equal care should be given to both main and auxiliary parts of the locomotive.

AUXILIARY DRIVE V-BELTS. Installation of Endless V-Belts. Inasmuch as V-belts have contact surfaces on the side walls, the high tension required with flat belts will not apply.

If possible, a complete set of new matched belts should always be installed, and the remaining old belts removed. If sufficient number of good second-hand belts have accumulated, it may be possible to match same up and utilize them for future installations. These should not be used on a drive where it is expected to keep same in service for a long length of time, or where application is difficult, as naturally the life of these used belts will be less than new belts.

When applying new belts to any drive, the tension device should be released so that the belts can be applied freely over the pulleys. If the belts are forced over the pulleys, a ply-break may occur, resulting in damage to the belts.

After a set of belts have been applied, the drive should be run for approximately three-quarters of an hour before checking the tension. This will allow the belts to become well seated and equalized on both sides of the pulleys before checking for tension.

After the belts have been broken in on the drive, the tension may be checked roughly by depressing the belt in the center (this is halfway between the two pulleys). This amount will vary somewhat on account of the variation in center distances, and of course, the amount of depression is dependent on the center distances of the drive—but, ordinarily this should be from ½ in. to 1 in. The force exerted should be the normal pressure possible to exert with one finger without straining.

If too much tension is applied, trouble will be experienced on the bearing of the drive, with resultant short belt and pulley life. If belts are applied too loosely, they will slip, thereby decreasing their life.

Belt dressings are not required and should never be used. Belts should be kept clean and free from oil. Belts not in use should be stored in a cool dark place as excessive heat deteriorates the belts. Do not store on a damp floor or where water or steam may damage the belts. When necessary to replenish stock, make sure that belts previously in stock are used before the newly acquired belts.

Tension should be periodically checked and adjusted on the belt drives, which include:

1. *Traction blower drives.* These should be inspected during operation on the road to be sure that cooling air is going to the traction motors. Each blower supplies air to the motors.

2. *Exciter and auxiliary generator drive.* Slipping of these belts will cause loss of power.

3. *The Radiator fan drive.*

Any excessive belt slap or noise at the pulleys should be reported immediately and corrected.

When applying new belts a continuous type *V-belt* should be used. When applying a new set of belts, care should be taken to have the belts a matched set. Connector type belts can be used in an emergency. These should be replaced as soon as possible.

Belts should never ride the bottom of the grooves.

PULLEYS. Pulley Groove Wear (Steel or Cast Iron). 1. Pulley Groove wear has been found to have a great bearing on belt life. Pulleys should be regrooved or resurfaced at reasonable intervals. Some railroads resurface their cast pulleys by spraying the grooves with a mixture of high carbon steel. The grooves are then remachined to size and polished.

2. When resurfacing is not done, but where pulleys are to be turned, the amount of wear and the extent of turning should be done in accordance with the following table. The amount of wear and turning shown is for *one* side of the groove only.

First condemnation point at	.030″ wear
First turning to	.040″
Second condemnation point at	.070″ wear
Second turning to	.080″
Third condemnation point at	.120″ wear

If wall thickness is less than ⅛ in. after third turning, the pulley is to be scrapped.

Pulley Replacement. Pulleys should be inspected to insure their being tight on the shaft at all times. The pulleys have a taper or straight fit and in each case during repair or replacement the following rules should be observed.

1. Where the fit is taper the pulley should be pulled up tight, should have a good fit over the shaft surface, and the key should be carefully fitted so that the pulley does not rest upon it.

2. The pulleys with a straight bore all have a shrink fit obtained by heating the pulley in oil before applying. A tight fit of this type is necessary for successful operation.

Pulley Alignment. When applying new pulleys or making adjustments, make sure the running pulleys are in alignment to insure straight belt operation.

Radiator Fan Drive. This drive is generally equipped with idler pulleys for adjustment and to insure smooth running.

If a gear drive is used, it should be inspected frequently for excessive back lash by moving the fan by hand.

Lubrication of this drive should be in accordance with recommendations.

Whenever replacement of the fan, gear box or pulley is made, care should be exercised to insure smooth running or balance of the fan, good alignment of the shafts at the flexible coupling, and of the upper pulley with the lower one.

SANDING EQUIPMENT. Sand Traps—Adjustment of Flow. The flow of sand can be adjusted to the quantity desired by screwing in or out the nozzle in the sand trap. If a greater quantity of sand is desired, back out the nozzle and tighten the jam nut. If a less quantity is desired, back off the jam nut and screw the nozzle deeper into the trap.

Cleaning of Traps. The cleaning of the traps should be automatic as there is a blow-out connection to the trap which operates to clean out the trap and pipes when the sanders are operated. However, if it becomes necessary to clean out the trap manually observe the following rules:

1. To remove the nozzle waste must first be inserted through the plugged opening above the nozzle to cut off the sand flow and *all* sand drained from trap through the plug opening below the nozzle.

Nozzle must be reinserted before sand is allowed to flow into trap.

2. Do not enlarge the nozzle holes or drill extra nozzle holes or cut off nozzle tube. Should nozzle be plugged with scale or gum from air pipes, disconnect the air pipe and blow out the scale. Also, with a pin or small wire, clean out the small part in the nozzle.

Automatic Sanding Valve. An automatic sanding valve should not be dismantled unless it becomes inoperative. Its failure to operate properly would be indicated either by a constant blow of the cleaning blast during the entire sanding operation or failure to deliver sanding air to the traps. In either case remove the top or actuating cap of the valve. Clean the cylinder and composition cup thoroughly.

At bottom outer edge of the actuating cylinder there is a small port to the atmosphere. Be certain this port is open or the sanders will not shut off promptly. A small wire or pin may be used to punch this port open from the outside.

CAB WINDOW MECHANISM. The side windows in the cab may be raised and lowered by a chain and sprocket mechanism. Adjustment of chain tension is by an adjusting screw directly underneath arm rest in window. If too tight the operation will be difficult and if too loose it will be rough.

The mechanism should be inspected at annual overhaul period, graphite applied to the chain and the notching handle cover removed for grease application.

RADIATOR FAN DRIVE GEAR BOX. The Right Angle Gear Box is used on some locomotives and is a unit through which the radiator cooling fan is driven from the Diesel engine shaft. The horizontal shaft of the gear box is coupled through a suitable coupling to a jack shaft in the radiator box; the jack shaft in turn is V-belt driven from the main shaft of the engine. The vertical shaft of the gear box extends upward, and carries a propeller type fan which draws the radiator cooling air through the radiators and discharges it upward through an opening in the roof of the locomotive.

CAB HEATER. Most Diesel locomotives are equipped with a cab heater to keep the engineer and fireman warm.

This unit may be an electric heating coil which obtains its electricity from the auxiliary generator and is turned on and off by a simple snap switch.

Generally, the heater used is of the hot-water type which obtains its heat from the hot water which circulates through the Diesel engine.

This heater is similar to the hot-water heaters used in automobiles and buses. A small electric fan located behind the heating coil is used to blow the heat into the engineer's cab.

Chapter 15

Trucks and Mechanical Equipment

TRUCKS. Swivel trucks are used on all Diesel locomotives now in army service, except for the smallest locomotive which has only 4 wheels. In this case, the operating cab and Diesel engine are mounted directly on top of the truck.

The normal truck swivels on a center pin and is able to go around as sharp a curve as a freight car can, since both the locomotive and the car have similar swivel trucks.

Wheels on the Diesel locomotive generally are driving wheels with an electric traction motor geared to each axle or driven from the powered axle to the other axle.

Fig. 1 shows a road-switcher truck having 6 wheels and 3 traction motors, one geared to each axle. This is shown as a typical truck because it contains all the parts of the standard 4-wheel truck plus the extra axle and spring rigging. Fig. 2 shows a typical 4-wheel truck.

Truck Wearing Parts. Both the body and truck center plates have vertical and horizontal steel liners with polished surfaces. Oil cups have gravity feed to the center plates. Hardened steel wear plates are applied to the side bearings and the sliding surfaces between the swing bolsters and the truck frame. The pedestal wearing faces and the corresponding faces on the journal housings also have hardened steel wear plates. The roller bearings are lubricated by the conventional oil bath immersion. The brake rigging pins and bushings are hardened and the regular lubrication will promote long wear.

When turning or replacing, the wheels on any one axle should be of the same diameter. On any one truck the recommended allowable difference in diameter is one inch.

Differences in wheel diameters between trucks under the same locomotive are limited by the ICC condemning limit.

Wheels should be checked periodically. In case wear is excessive, the following should be inspected:

1. Make sure that the brake shoes are not binding on the flanges or wheel tread. Adjust brake cross ties if necessary.
2. Check to see that the brake shoe hangers are hanging true and are not causing misalignment of the shoe.

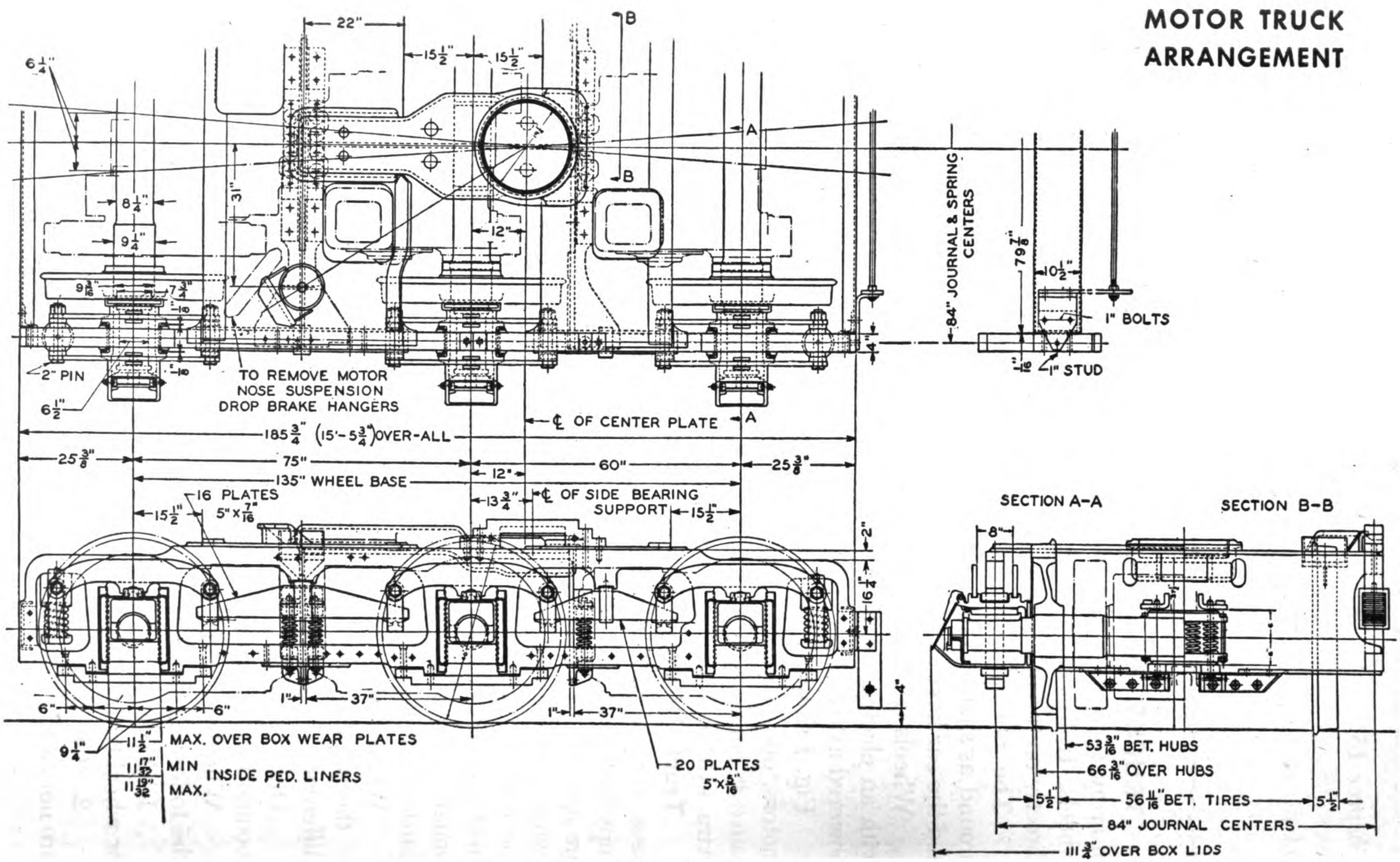

Fig. 1. Road Switcher Truck with 6 Wheels and 3 Traction Motors

3. See that no sand pipes or other parts are rubbing on the brake rigging.

4. When new brake shoes are applied make sure that they hang true in the head.

5. If wheels are removed from axle and reapplied make sure that they do not exceed gauge.

6. Check to see that the box and pedestal liners are not excessively worn. In application of new liners be sure that the spacer plates inside the liners are properly placed, and that all edges of the liners are rounded on edges that rub other surfaces.

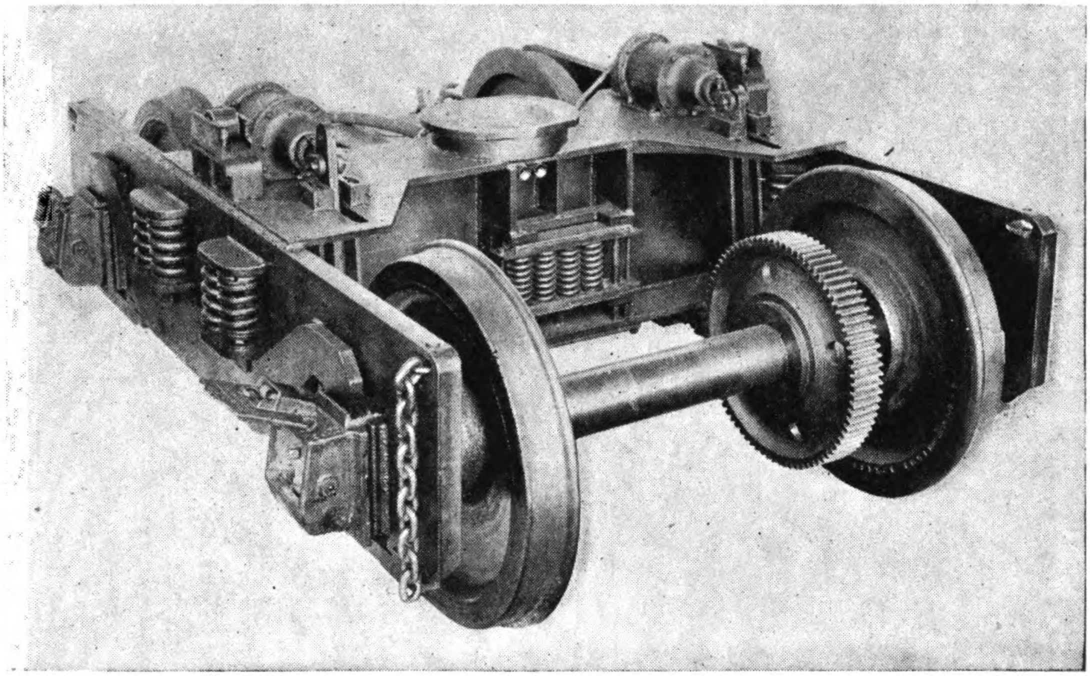

Fig. 2. Typical 4-Wheel Truck (One Motor Missing) for 65-Ton, 350 Horsepower Diesel-Electric Locomotive

7. Brake travel should be adjusted properly.

UNDERFRAME. Fig. 3 shows the underframe for a Diesel 45-ton switching locomotive. The view is from the No. 1 end and shows arrangement of oil, water, and air piping.

On these switching locomotives, the truck center pins extend up through two circular hardened steel plates at the center of the two crossmembers of the underframe. At either side of the pins are located the truck side bearings (the wearing plates on the underframe which rest on the truck side plates).

The deck plate is made from heavy rolled steel. There are two center sills extending the full length of the underframe. Housings for

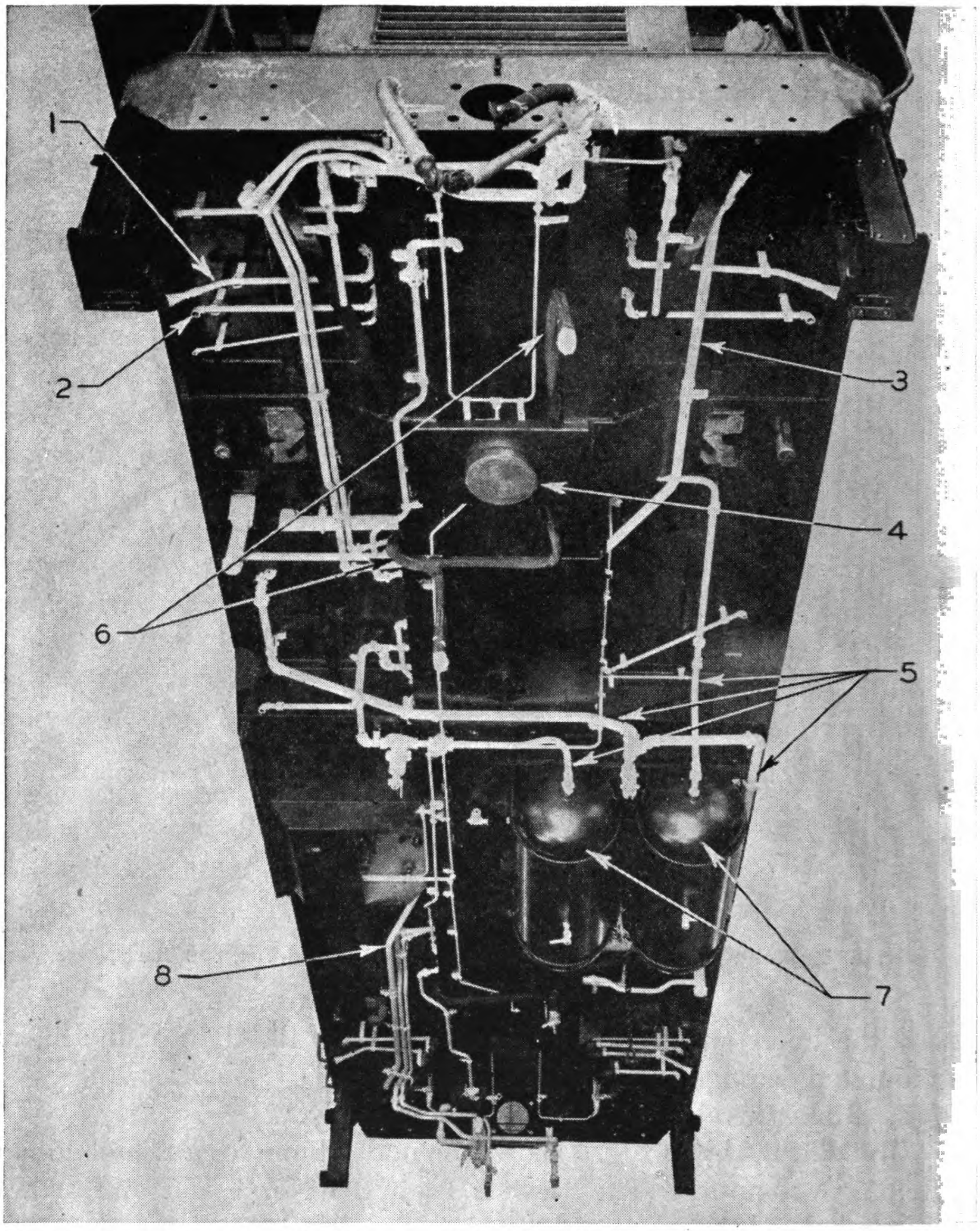

Fig. 3. Diesel Locomotive Underframe. At 1, Radiator Water Overflow; 2, Water Drain; 3, Fuel Oil Line; 4, Center Bearing; 5, Air Pipes; 6, Motor Cables; 7, Air Reservoirs; 8, Fuel Oil Line.

the friction draft gear are located at each end of the underframe under the two center sills.

Two compartments are built into this underframe, one on either side. One contains the storage battery; the other is used for the main contactors and the reverser on some locomotives.

OPERATOR'S CAB. The operator's cab, as in Fig. 4, is generally centrally located, yet it may be on one end of the locomotive, especially in the smaller locomotives.

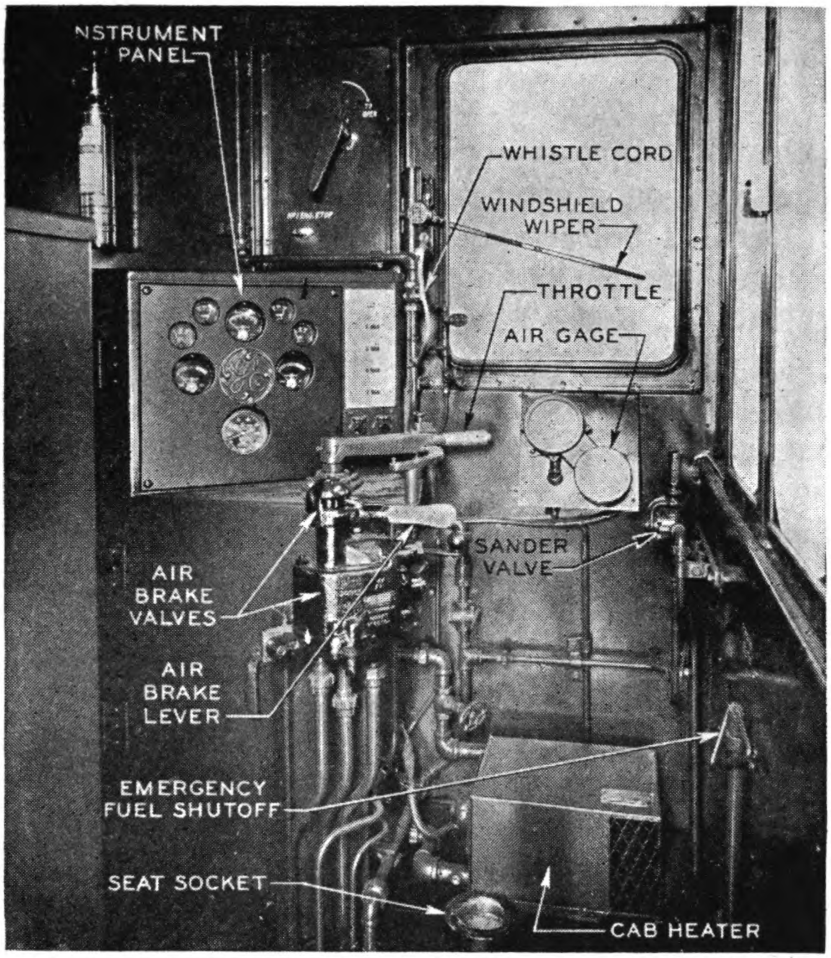

Fig. 4. Operator's Cab in 45-Ton, 380 Horsepower, 66-Inch Gauge Locomotive

The cab and hood are made of steel plates welded tight and rigid. Large doors in the hood can be opened wide to give full access to the equipment.

Chapter 16

Diesel Locomotive Operation and Preventative Maintenance

This chapter will cover operations and preventative maintenance in a general way only, emphasizing some of the high points to be watched. Detailed instructions must be obtained from that manual which covers the specific locomotive.

GENERAL. a. Brake Precautions. When the locomotive is left standing at a point where it is necessary to apply the hand brake, air brakes are released before the hand brake is applied; then the hand brake is applied. Wheels should also be blocked to prevent undesired movement.

b. Precautions Before Starting Engine. Before starting the engine, the operator will:

(1) Check position of all valves for correctness.

(2) Check fuel oil supply for engine.

(3) Check water supply for engine cooling.

(4) Check lubricating oil supply.

(5) Check for anything loose or under repair in the engine compartment.

(6) Check for accumulation of water or oil with cylinder test valves or compression release lever. Open these valves and turn engine once by hand (using turning bar) or with starter, with shutdown lever in "off" position. Determine the cause of any discharge and remedy it. Close the cylinder test valves.

(7) Be sure all fuses are in place.

c. Precautions Before Moving Locomotive. Before moving the locomotive, the operator will:

(1) Check air supply in main reservoirs. Main reservoir pressure is indicated by the red hand on the gauge at the left side of the instrument panel located directly in front of the engineer's cab. If main reservoir pressure is under 80 pounds, the air should be pumped up as explained later in these instructions.

(2) Watch lubricating oil pressure gauges. Oil pressure should build up at once. If these gauges do not show pressure immediately, the engine should be shut down and the condition reported.

(3) See that the temperature of the water for cooling the engine indicates at least 125° F. on locomotives up to 80 tons and 140° F. for 80- to 120-ton locomotives before any attempt is made to move a load.

(4) Take the same safety precautions as for other locomotives. Make certain that brakes are operating.

(5) Check sanders and make sure they all operate and have sufficient supply of sand in boxes.

d. Starting, Idling, and Shutting Down Engines. The operator should observe the following precautions:

(1) On cold engines or engines that have stood overnight, the engine should be idled until the water temperature has reached 140° F. for 80- and 120-ton locomotives and 125° F. for the smaller locomotives. By closing all shutters, the engine will warm up in the minimum time.

(2) One-thousand horsepower engines should be kept idling, unless the idling period will be over 90 minutes, in all seasons of the year. On smaller engines where the standing time will exceed 30 minutes, the engine should be shut down and started up again when required, allowing time to bring the engine to operating temperature. Excessive idling, on the other hand, is the most common cause of stuck piston rings. In below freezing weather, it may at times be necessary to idle the engines to maintain water temperatures for easy starting.

(3) Before shutting down an engine, it should be idled for a time sufficient to lower the water temperature to 140° F.

e. Running Through Water. (1) Under absolutely no circumstances should the locomotive pass through water which is deep enough to touch the bottom of the motor frames. Passing through water should be done at very slow speeds (2 to 3 miles per hour).

f. Lack of Power. (1) In the engine, this may be caused by power combustion, insufficient air, improper fuel, leak in fuel suction line, governor trouble, injector trouble, restriction in exhaust, incorrect timing, leaky exhaust valves, or a tight bearing or piston.

(2) In the electrical system, lack of power may be caused by low-generator field excitation, which in turn may be caused by a faulty connection in the field circuit of the generator battery, a faulty field contactor in the auxiliary generator. Lack of power may also be the result of faulty traction motors or generators, transition relay, current limit relay, or blown fuses in battery or exciter circuits.

g. Exhaust Smoke. (1) Smoke at the exhaust is usually an indication of poor combustion of fuel but may be the result of excessive lubricant passing into the combustion chamber. Fuel in a partially burned condition will cause a black exhaust. If fuel is not igniting, the exhaust may show blue. Smoke may appear with light loads or upon starting because of the low temperature of the combustion chamber. Misfiring, improper fuel, incorrect timing, a faulty injector, or insufficient air may be the cause of exhaust smoke.

h. Deadheading. (1) When the locomotive is to be moved by other than its own power, the reversing handle should be in neutral. The operator should place the handles of both the independent and the automatic brake valves in the running position. The cutout cock below the automatic brake valve should be closed; the dead engine feature valve should be open. When deadheading, the distributing valve safety valve is set to open at 23 pounds brake cylinder pressure.

i. Leaving the Locomotive. (1) Before leaving the locomotive, the operator must shut down the engines, open all the switches, and see that all the doors and windows and hatches are closed. He must also close radiator shutters and set the hand brakes. If there is danger that the water for engine cooling might freeze, the entire cooling system must be drained unless anti-freeze is used or the cooling system is provided with a heater. When anti-freeze solutions are used, it will *not* be necessary to drain the cooling system. If, however, it becomes necessary to drain the cooling system when anti-freeze solutions are used, the solution drained from the cooling system should be saved and replaced when cause for removal is corrected.

(2) If it is necessary for the engineer to leave operating position temporarily, the master controller handle must be left in neutral position and the independent brake valve in application position.

(3) In all cases where the engine is left standing alone and the power plant and compressors shut down, the hand brake must be applied and the wheels blocked.

(4) In preparing for operation after engines and air compressors are started and the main reservoirs are charged to the proper pressure, the hand brake must be released before attempting to move the locomotive.

(5) In order to change the direction of motion of the locomotive, the throttle handle should be placed in the position for idling the engines and the locomotive brought to a stop before advancing the throttle again. *The locomotive must never be reversed while in motion.*

j. Cutting Out Isolating Equipment. (1) Where locomotives have two power plants, either plant may be shut down in case of trouble and the locomotive continue to function on one plant for emergency purposes. In cases where locomotives are operated with one power plant shut down, extreme caution should be taken not to overload the remaining power plant. The load on any power plant is indicated on the ammeter. The amperage shall not exceed the authorized time-limit table.

(2) In case of traction motor failure, individual or a combination of traction motors may be cut out.

(3) In rerailing a locomotive or if a traction motor becomes defective, one or both trucks can be isolated electrically by the motor cutout switches mounted in the electrical control cabinet.

(4) In case of derailment of one truck, it may be possible to cut out the derailed motor on the derailed truck and rerail the engine by using the power of the motor on the other truck; however, in order to avoid any damage to the motors, it is preferable to secure the assistance of another locomotive.

(5) Any person throwing a motor cutout switch should clearly understand that it is to be done only in case of extreme necessity and that the locomotive must not handle any cars when a truck is cut out. Operation should be at not more than one-half throttle with a truck isolated on a single-engined locomotive, or with a motor isolated on a double-engined locomotive. If one engine or a double-engined locomotive is shut down and the other power plant's traction motors are in operating condition, the operating power plant may be operated at full throttle.

k. Overheating of Engines. (1) The engine should not be stopped immediately after a hard run. Circulation of the water depends upon the circulating pumps and when the engines are shut down, the pumps also stop. The iron masses in an engine pulling full load absorb sufficient heat to boil the water if the circulation stops. The engines should be idled to bring the water temperature to 140° F. before they are shut down.

(2) If for any reason the water supply has failed, water should not be turned into the cylinder jackets until they have become normally cool. The heads are liable to crack if they have become too hot and water is turned into them.

l. Shutting Down of Locomotives. (1) The independent brake valve handle should be left in slow application position and the hand brake applied.

(2) After the engine has been shut down, control switches are turned to the "off" positions, reverse control handle placed in "off" position, throttle in "off" position, and battery switch opened.

m. Work Reports. (1) After completion of each trip or day's work, work reports must be filled out on the approved form by enginemen.

(2) Further details covering maintenance and inspection of various types of Diesel-electric locomotives should be reported according to the instruction book furnished with the locomotive.

OPERATION OF DIESEL-ELECTRIC LOCOMOTIVES. a. The operator, in preparation for operation, will:

(1) Inspect engine-generator and control compartments to see that no waste, rags, tools, lanterns, etc., are near any moving or electrical parts.

(2) See that proper quantities of lubricating oil, fuel oil, and cooling water are in their respective tanks.

(3) See that hand-operated valves in water and oil lines, etc., are in proper operating position.

(4) Give handles on the metal edge type fuel and lubricating oil filters one complete turn.

(5) Close battery cutout switch.

(6) Make sure that throttle handle is in the idling notch and that reverse handle on master controller in front of control stand is in the middle or neutral position.

(7) Push control button in.

(8) Push the engine start button in and hold it in until engine fires; engine should start to turn over immediately and should fire within five seconds. If it does not fire, the operator will release button and investigate rather than discharging the battery by repeated attempts if the first two or three are not successful.

(9) Watch lubricating oil pressure gauge to see that pressure builds up promptly to 35-40 pounds after engine has fired. If it does not, the operator should stop engine immediately and investigate cause.

AIR BRAKE EQUIPMENT. a. Some Diesel-electric switch engines are equipped with No. 14-EL brake equipment (described in Westinghouse Air Brake Company's Instruction Pamphlet No. 5046-13), an adaption of the No. 6-ET equipment as applied to steam locomotives. The operation and functioning of the various parts of this equipment are practically the same as No. 6-ET.

b. Air filters used in connection with air compressors are similar to those in use on steam locomotives and require the same attention with regard to cleaning. Strainers should be kept clean at all times.

c. The oil in the compressor crankcase is circulated under pressure by means of an oil pump. The oil level should be checked on daily or trip inspection, and oil should be added if the oil level falls to the "Add Oil" point on the blade of the bayonet gauge. On compressors that do not have the bayonet gauge, the oil should be maintained to the level of the oil filling plug. There are two oil drain plugs located below the crankcase side covers on either side; either drain may be used. The lubricating oil in the air compressor should be changed every 750 hours of Diesel engine operation, and generally the same SAE No. oil should be used in both compressor and Diesel engine.

d. The intercooler must be drained at each daily inspection, or oftener if necessary, to remove moisture which will accumulate. Drain cocks are located in the bottom header of each bank of intercooler tubes for this purpose.

e. The maximum and minimum main reservoir pressures are controlled by the compressor governor which loads and unloads the compressor at predetermined pressures.

f. Air compressors shall be subjected to a capacity test whenever conditions require or at least once every 3 months. (Refer to approved rules covering testing of motor-driven air compressors.)

g. Every main reservoir after 12 months of service shall be subjected to a hydrostatic test not less than 25% above the maximum working pressure.

h. The entire surface of the main reservoirs shall be hammer tested each time the locomotive is shopped for general repairs.

i. Air gauges shall be tested when any irregularity occurs or at least once each 3 months. A test gauge provided for this purpose is used.

j. Distributing valves, brake valves, feed valves, and dirt collectors should be cleaned when not functioning properly but not less frequently than once every 6 months. Records of cleaning should be kept in the cab of the locomotive.

k. Minimum travel of the brake cylinder shall be sufficient to provide proper brake shoe clearance when brakes are released. Maximum travel should not exceed 3½ inches.

l. Compressor drive belts should be adjusted to proper tension.

LUBRICATING OIL SYSTEM. **a.** The proper lubrication of Diesel-electric locomotives cannot be overemphasized; and instructions should be followed closely in this respect.

b. The proper level and grade of oil should be carried in the crankcase at all times. Care should be taken to maintain a regular lubricating schedule on the remainder of the locomotive.

c. The frequent cleaning of metal-edge type and changing elements on bag-and-waste type of lubricating oil filters will increase the life of the oil by the absorption of carbon deposits and other impurities carried in the oil. Elements of bag-and-waste type filters should be changed each time the lubricating oil is changed.

d. If the height of the lubricating oil rises in the crankcase, it will be found to be mixed with either water or fuel oil, and the locomotive should be taken out of service until the reason for dilution is determined and corrected.

e. Dilution of the lubricating oil by fuel oil is serious because bearing failures often happen because of it. Injectors should be cleaned, fuel connections should be checked for leaks and injector rocker arms, and push tubes should be checked for failure.

f. Dilution of the lubricating oil by water, although not as prevalent, is equally as serious, and cylinder heads and block as well as cylinder liner seals should be checked for leaks.

FUEL OIL SYSTEM. **a.** Care must be used in keeping fuel oil in a clean condition.

b. Storage tanks or drums must be free from dirt, water, or rust scale. Care must be taken to exclude any foreign matter when transferring fuel from storage tanks to locomotive fuel tanks. Occasional flushing of the locomotive fuel tank will remove any sediment which has settled in the tank. This may be done by removing drain plugs in the bottom of the fuel tank and allowing a small amount of fuel to drain out, then replacing plug.

c. The fuel-oil injection system is protected by the extensive use of filters. Clean fuel oil is necessary because of the close clearances in the injection pump and injection nozzle mechanisms. Periodic cleaning or changing of elements of fuel oil filters will prevent unnecessary fuel injection troubles.

COOLING SYSTEM. **a.** The engine cooling system is filled through a filler pipe in the roof, or at the side of the truck under the platform of the locomotive. Fill until tank or standpipe overflows.

b. The use of organic water treating compound is strongly recommended in Diesel engine cooling systems. It reduces scale formation and caustic embrittlement within the engine.

c. The engine water-outlet manifold thermometer in the cab provides an excellent means of determining a faulty water circulation or lack of water in the cooling system. Poor water circulation is also indicated by excessive localized heating at various points in the cooling system. This may be determined by holding the hand at various points in question and making a comparison in the degree of heat.

d. Proper adjustment should be kept on radiator fan belts to insure proper functioning of the cooling fan.

e. If the engine should overheat because of insufficient water in the cooling system, add *hot* water while slowly idling the engine. If the engine is extremely hot, let it stand for an hour or so before adding any water.

f. Maintain a temperature as even as possible in cooling system (between 140° and 180° F., preferably 160°, and never above 195°).

ELECTRICAL EQUIPMENT. **a.** Batteries are used in starting the engine and supplying the current for lights and other auxiliary units. Care should be taken to keep the correct water level in the batteries. They should also be given an occasional test with a hydrometer to ascertain the amount of charge carried.

b. On locomotives where a cutout switch is provided for disconnecting the battery from the circuits, the switch should always be opened when leaving the locomotive for an idle period or when working on any control circuits.

c. The master controller is used to select the direction of motion of the locomotive. It is interlocked with the main throttle handle so that the controller cannot be thrown from forward to reverse or vice versa unless the throttle is in idling position.

d. The reverser is a drum switch for reversing the traction motor fields, operated by a double-cylinder air engine controlled by two magnet valves which in turn are controlled electrically by the master controller.

e. In the event the engine does not rotate when starter switch is contacted, check the battery cutout switch, fuses in circuit, and starting contactors.

f. If the engine will run but the locomotive will not move, check control and auxiliary fuses and contactors in power circuits.

g. If the locomotive will move in one direction only, the trouble will be found in the wiring from the controller to the air-operated magnet valve coil in the interlocks on the reverse, or in low control air pressure which should be normally 70 pounds.

h. The reverser master controller handle must always be kept in the direction of movement of the locomotive, except when deadheading; then, it should be in the neutral position.

i. The main generator supplies the electrical energy used to power the locomotive. The purpose of the auxiliary generator is to charge the batteries. On some locomotives, an exciter generator is used to excite the main generator fields. The traction motors convert the electrical power from the main generator to mechanical power and are geared to the locomotive axles.

j. Transition is the term applied to the changing of the traction motor electrical connections from series to series parallel. This is done to obtain the desired tractive effort and speed within the voltage operating limit of the generator.

SHIPPING. a. Standard 25- and 45-ton locomotives are to be loaded on flat cars for shipment unless instructions to the contrary are issued by the Office of the Chief of Transportation. Special 45- and 60-ton and standard 44-, 65-, 80-ton, and larger locomotives are to be shipped on their own wheels at the rear end of a freight train. The maximum speed of the train in which the locomotive is hauled must be no greater than the maximum permissible speed of the locomotive. On all locomotives shipped on their own wheels, the traction motor pinions must be removed unless instructions to the contrary are issued by the Office of the Chief of Transportation. Also prepare locomotive for deadheading as set forth in the first portion of this chapter.

b. All locomotives shipped on their own wheels must be accompanied by a government messenger. The messenger must have had proper instruction and tests to make sure he understands and can properly inspect and lubricate journal and motor axle bearings.

Chapter 17

Diesel Locomotive Application

ENGINEER'S CONTROLS

The engineer's controls are grouped conveniently within arm's length, and the engineer can spot cars quickly and accurately. (See Fig. 1.) Moreover, the locomotive is easy to operate; simply open the throttle, and it responds instantly and accelerates quickly and smoothly.

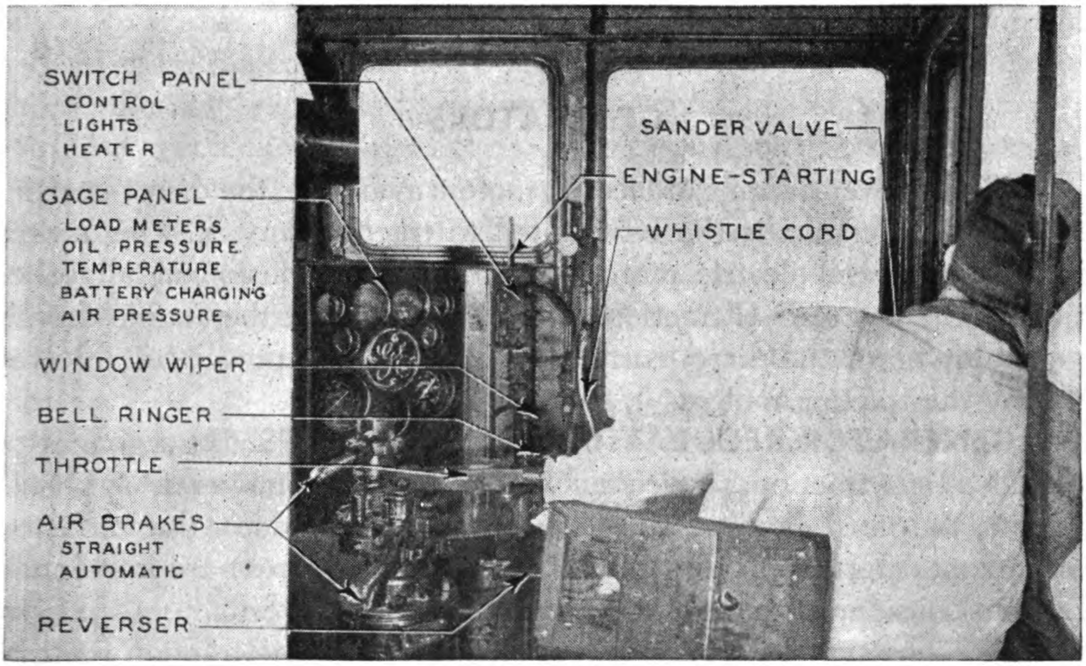

Fig. 1. Finger-Tip Control

Reversing is equally simple; just throw the reversing lever with the throttle in the idling position.

The beginner can readily learn to operate a Diesel locomotive, but only the supervising officer in charge or his superiors should apply the locomotive to the proper job or assignment. This chapter is included to show the fundamentals of application, parts of which the beginner will appreciate and understand.

If a steam locomotive is placed on the job and is too small to handle the load, it will simply stall. The steam locomotive does not have a transmission which is able to change its power output. Its transmission is a side rod which either does or does not do the job.

The Diesel-electric locomotive must have a transmission system to transmit the power to the wheels. This electric transmission will not stall when handling too heavy a load; this means the electric windings in the electric transmission will burn out if the locomotive is seriously overloaded.

For that reason, the Diesel-electric locomotive has a high reserve of energy, yet must be definitely assigned a specific tonnage rating for each section of track it operates over. Thus, this chapter is very important.

Before going into the details of locomotive application, let us see more clearly why such application is necessary and how electric transmission functions.

GENERATORS

Of the several forms of electric motors available, the direct-current series-wound motor is the best suited to traction service. This motor is used in Diesel-electric motive-power to the exclusion of all other types. The use of D-C traction motors requires that the engine-driven generator be of the direct-current type, furnishing power suitable for use by the traction motors.

GENERATOR REGULATION REQUIREMENTS. In a generator employed in traction service in which the prime-mover is a Diesel engine, the need for, and the form of, load regulation (the variation of generator terminal voltage with the load in amperes) are influenced by two considerations:

(1) The type of load regulation required by the traction motors.

(2) The type of load regulation required by the Diesel engine driving the generator.

The characteristics of the D-C series-wound traction motor are such that, at low speeds, high torques which correspond to high values of load current are obtainable with relatively low voltage impressed on the motor terminals. High speeds with decreased torques require increased voltages and lower amperages. Thus, during the period of acceleration of the motive-power and its train, relatively high torques (tractive efforts) at continuously increasing voltages are required of the traction motors and, hence, of the generating equipment feeding the motors.

For maximum accelerating performance, the current flowing through the traction motors should be held constant at a value corresponding to the tractive effort just below the slipping-point of the wheels; the voltage across the motor terminals should be increased as the vehicle speed increases. Where a practically unlimited power supply is available, as is the case with the straight electric locomotive which takes power from an external source, this practice is followed, limited to a range of current variation dictated by the number of accelerating resistance steps afforded by the control equipment.

Where the magnitude of the power supply is limited as in Diesel-driven generators, the product of the voltage and amperage (power) taken by the traction motors (and hence from the generator) must be adjusted continuously so that the power demand never exceeds the power available. Thus, in the process of acceleration, where the voltage must be increased to keep pace with the continuously increasing speed, the amperage (and tractive effort) must be decreased.

The mechanical construction and thermal characteristics of the D-C series-wound traction motor are such that overloads can be imposed upon the motors for limited periods without danger of permanent injury to the motors. Advantage is taken of this feature in straight electric locomotives in which the horsepower developed during accelerating periods is considerably more than the continuous rating of the motors.

On the other hand, the Diesel engine is for practical purposes inherently a constant torque, constant speed, and, as a consequence, constant horsepower engine at its rating point (see Fig. 2) with little if any overload capacity. Particularly is this true in locomotive service where the engine is generally rated at its maximum practical output in the interest of obtaining as high an output as is practical for a given engine weight but without introducing excessive maintenance.

To utilize the maximum power available from the engine, the transmission system between the engine and the driving wheels must convert the torque of the engine into tractive effort at zero speed of the locomotive, and permit a reduction in tractive effort with the increase in speed attendant to the acceleration of the train, without exceeding the horsepower rating of the engine.

REPRESENTATION OF HORSEPOWER RATING IN ELECTRICAL TERMS. The constant horsepower of the engine, at its rated output available for traction purposes as input to the generator, may be expressed in electrical terms as so many kilowatts, and may be shown in graphical form in a curve plotted to coordinates of volts and amperes.

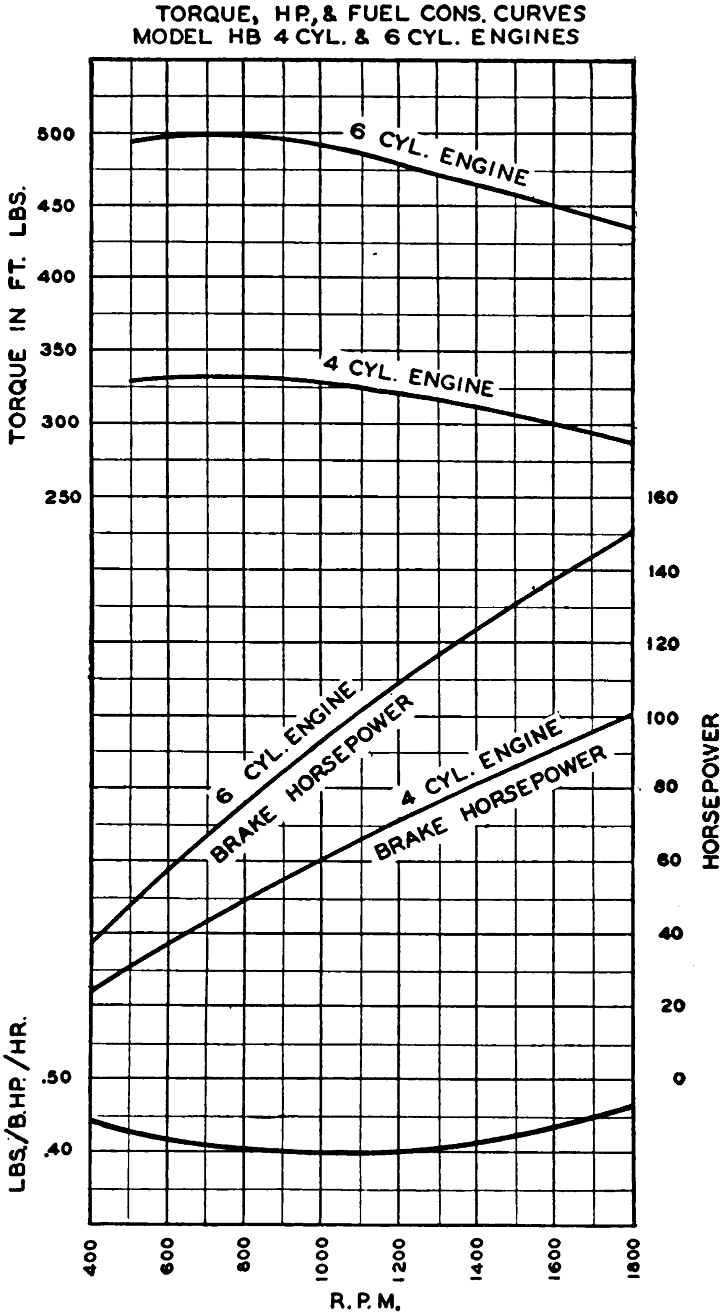

Fig. 2. Torque, Horsepower, and Fuel Constant Curves

For illustrative purposes, let us assume a Diesel engine from which 500 hp. is available for input to the traction generator.

The relation between mechanical power and electrical power is given by

$$1 \text{ hp.} = 746 \text{ watts} = 0.746 \text{ kw.}$$

then

$$500 \text{ hp.} = 373 \text{ kw.}$$

In electrical terminology, the product of volts and ampere is watts; in equation from this is:

$$\text{volts} \times \text{amperes} = \text{watts}$$

or

$$\frac{\text{volts} \times \text{amperes}}{1000} = \text{kilowatts}$$

If we arbitrarily select different values of volts and amperes so that the product of volts times amperes is always equal to 373 kw. (the kilowatt rating of our Diesel engine), we may plot the engine characteristic in coordinates of volts and amperes as shown in the accompanying graph, Fig. 3.

On this same graph, there is plotted the volt-ampere characteristic (the load characteristic) of the generator which is to be driven by the engine. This characteristic (curve *b*) would be obtained from the generator (a self-excited shunt-wound machine) if it were driven at a constant speed with a fixed setting of the field circuit resistance.

It is evident that for all values of load less than 750 amperes the engine will have no difficulty in carrying its load at or above its rated speed under the control of its governor. If, however, the load demanded of the generator is greater than 750 amperes, more than the rated horsepower of the engine will be required to maintain the speed of the generator. As a consequence the engine will be overloaded and, since the engine torque will remain substantially constant for a definite value of fuel oil injected, the speed will drop. If the characteristic of the generator is assumed to be such that the generator terminal voltage drops off, as the generator speed decreases, at a rate greater than the rate of decrease in speed, a point of stability between generator load demand on the engine and engine output will be reached at a speed lower than the full horsepower rating speed of the engine. Since the torque has not changed (the amount of oil injected per stroke of the engine is at a maximum), the power output from the engine-generator combination has been reduced.

In the foregoing discussion, generator efficiency has been neglected to simplify the discussion. Actually the power output of which the engine-generator set is capable, assuming full rated output of the engine as 373 kw., should be shown by the broken line (*c*) which takes into account the generator losses. Thus for the case selected, full load on the engine would correspond to 650 amperes, instead of 750 as was assumed in the foregoing.

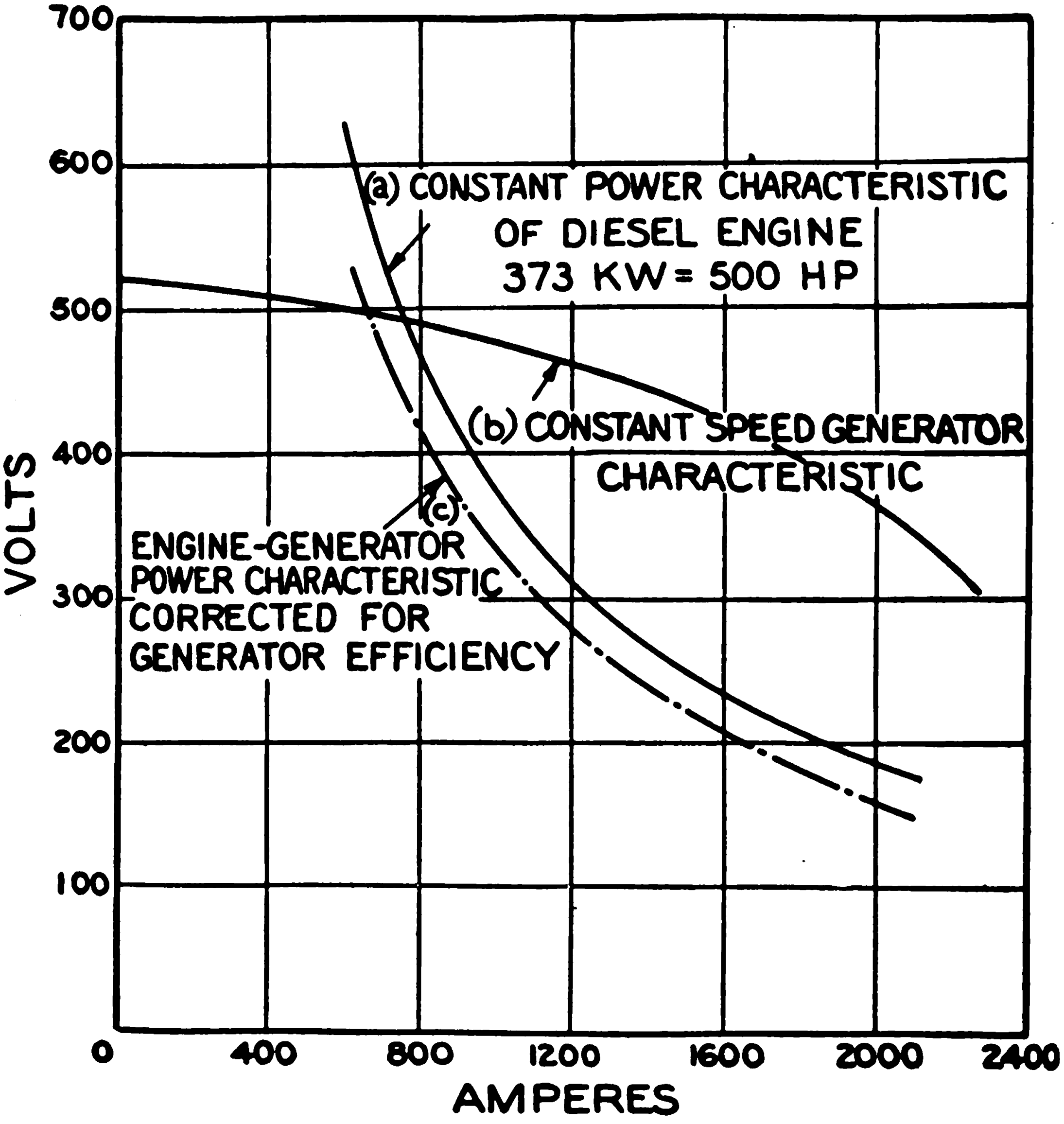

Fig. 3. Load Chart

Obviously, the ideal generator is one which will permit maximum utilization of the rated output of the engine over the entire range of locomotive speed and tractive effort, limited only by maximum permissible locomotive speed and wheel-to-rail adhesion. In addition, the generator regulating system should permit of partial loading of the engine without the necessity of running the engine at full speed, when the locomotive speed and tractive effort requirements are such as to demand less than maximum output from the engine. In such a generator, its field excitation should be adjusted so that at no time—from standstill to maximum locomotive speed—does the generator's torque demand exceed the rated torque of the engine at its rated speed, or, for submaximum outputs, exceed the torque corresponding to the particular output and speed at which the partial load is demanded.

GENERATOR REGULATING SYSTEMS. Regulating systems for generators employed in Diesel-electric traction service may be divided into two broad classifications:

(1) Inherently-regulated systems, in which the means employed to effect the desired voltage regulation with changing loads is built into the generator itself, or into the generator and its exciter, if a separate source of excitation be employed.

(2) Externally-regulated systems, in which the regulation is secured or controlled by the operation of devices external to, and not a part of, the generator or its exciter.

The very existence and continued use of both of these general systems in present-day Diesel-electric locomotives indicates that there are advantages in each of the systems which are not obtainable with the other system.

It is maintained by those favoring the inherent regulating systems that these are the more practical, eliminating as they do external mechanisms with moving parts that are subject to purposeful or accidental changes in adjustment or setting. It is admitted that inherent regulating systems require more space, weight, and material in the generators; but these disadvantages, it is maintained, are more than offset by freedom from maladjustment and extra maintenance involved with the "moving element systems."

Those favoring the externally-regulated generator maintain that such a generator is less expensive in first cost, lighter in weight, and occupies less space than does the inherently-regulated machine; that the devices now available for effecting automatic external regulation are reliable in their action, require a minimum of attention, and allow maximum utilization of the full-power possibilities of the engine more easily than do the inherently regulated systems.

Divisions of Inherently Regulated System. The inherently regulated systems, referred to as item (1), may be divided into three groups: A, the self-excited shunt-wound generator; B, the differential-wound generator; C, the differential-wound exciter.

A. The self-excited shunt-wound generator is the type of regulation normally used on small high-speed engines which are easily capable of changing their engine speed in order to obtain the proper generator performance.

(Fig. 9 shows the characteristics obtained with a self-excited shunt-wound generator driven by a relatively high-speed engine from which 130 hp. is available for input to the generator.)

While the generator is termed a self-excited machine, the connections are so made that initially a small amount of separate excitation is supplied to the shunt field to insure stability and "buildup" with correct polarity. The generator is specially designed with a relatively large amount of armature reaction so that a sharply dropping load characteristic is obtained.

The generator load characteristic is allowed to cut into the engine characteristic causing a drop in speed (as shown by the top curve of Fig. 9). While some power is lost due to the drop in speed, considerable "wrap-around" of the two characteristics is obtained and the system is self-regulating. To prevent complete stalling of the engine, the excitation characteristics of the generator are such that, as the speed of the unit drops, the excitation drops off at a rate faster than the rate of drop in speed.

While a certain amount of power is lost because of the decrease in engine speed, the power lost is not directly proportional to the drop in speed since the engine torque increases slightly as the speed drops. This increase in torque will be noted by reference to the torque and horsepower curves of Fig. 2, applying to the Cummins H.B.-6 150 hp. —1,800 r.p.m. non-supercharged engine.

B. The differential-wound generator is one of the oldest methods of inherently regulating the generator. See Fig. 4. This method is no longer used but is mentioned here to point out its disadvantage. Its principal disadvantage is its excessive weight as compared to either methods A or C. Method A is the lightest and simplest arrangement. Method C has all the advantages of B with considerable reduction in weight.

C. The differentially-wound exciter is the type of inherent regulation generally used on larger Diesel engines.

By using a specially wound differential exciter, Fig. 4 is changed to look like Fig. 5, the light line being the engine curve and the heavy

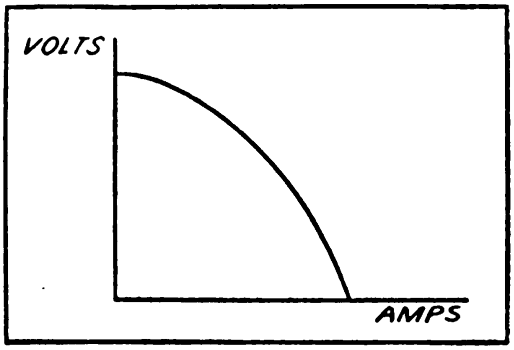

Fig. 4. Usual Differential Field Characteristic

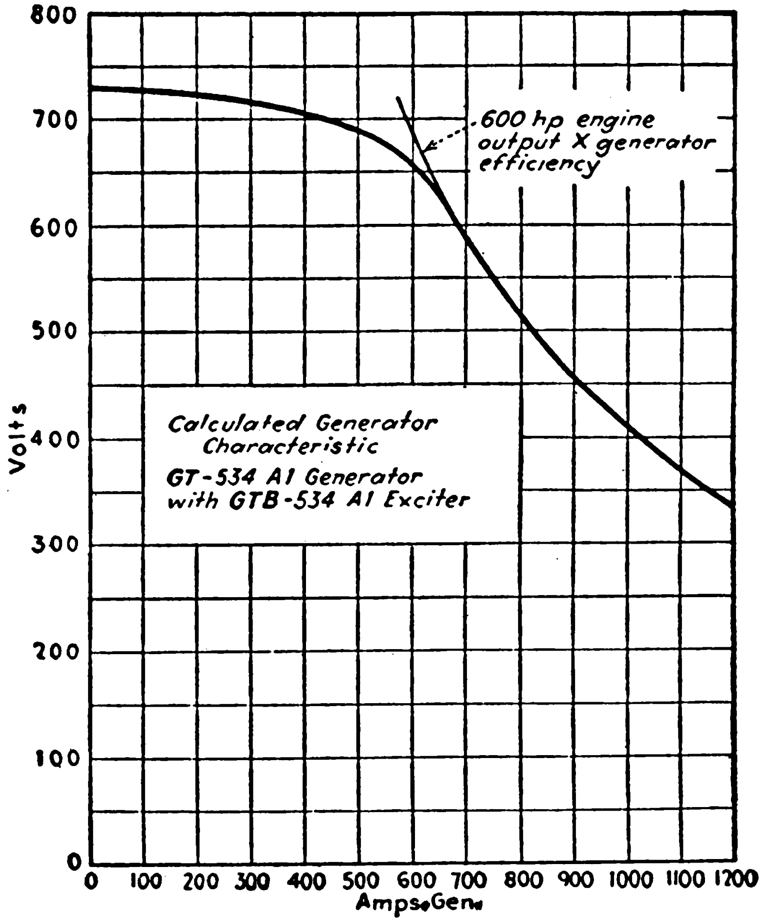

Fig. 5. Curve Showing Relation of Generator Voltage and Current

line the generator output. Figs. 6 and 7 show one method of winding this exciter.

There are various ways of building this type of exciter, yet the results which allow the generator to transmit the full output of the engine without stalling the engine, are practically the same. In this way the full engine output is delivered over the entire working range of the generator and at all locomotive speeds within the normal operation of the locomotive.

This type of generator regulation is not necessary on the small switching locomotives but is used extensively on the road switcher units.

LOCOMOTIVE CHARACTERISTICS

In the foregoing it was shown how the engine characteristic was coordinated with that of the generator to produce an engine-generator load characteristic. It is in order now to combine this characteristic with that of the traction motors. The resulting engine-generator-motor characteristic, expressed in terms of locomotive speed and locomotive pulling power at various speeds, indicates the performance capabilities of the locomotive as a motive-power unit.

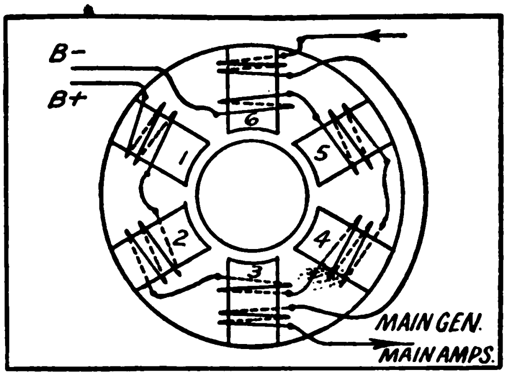

Fig. 6. Westinghouse Differential Exciter Field Arrangement

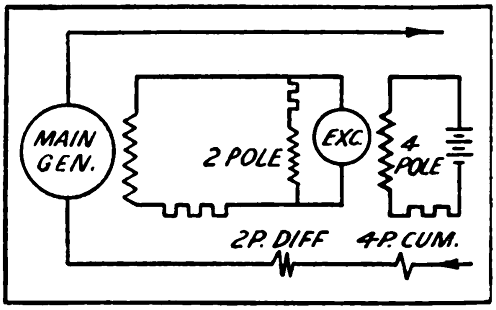

Fig. 7. Simplified Schematic Modern Differential Control

The performance characteristics of railway motive-power are plotted in either of two ways:

(1) Speed-Tractive Effort Curves.

(2) Speed-Drawbar Pull Curves.

In the first of these, the tractive effort exerted at the rim of the wheels is plotted against speed in miles per hour before allowance is made for locomotive mechanical friction, track resistance, etc.

In the second, the pull exerted at the locomotive drawbar on level tangent track is plotted against the speed in miles per hour. In this case, locomotive resistance including mechanical friction in journals, track resistance, etc., is subtracted from the wheel tractive effort before plotting.

The method described under (1) is universally applied to electric locomotives while the second method is in general use in connection with steam locomotive performance characteristics.

The speed-tractive effort method of plotting characteristics has the advantage over the speed-drawbar pull method in that calculations for performance are more easily handled with the former than with the latter. A train resistance curve can be made up for the entire train as a unit, including the locomotive; and the effects of train resistance, curve resistance, and grade resistance can be determined more expeditiously than if the locomotive and its train are treated separately.

Because the Diesel engine is a constant horsepower prime-mover, the characteristic of the locomotive will be essentially a constant power characteristic with modifications dependent upon the characteristics of the transmission system between the engine and the driving wheels.

If the constant horsepower characteristic of the engine is plotted in terms of locomotive tractive-effort and speed according to the equation

$$\text{hp.} = \frac{\text{TE} \times \text{m.p.h.}^{*}}{375}$$

in which

hp. = horsepower
T.E. = tractive effort in pounds
m.p.h. = speed in miles per hour

an equilateral hyperbola will result, since the equation may be written

$$\text{T.E.} \times \text{m.p.h.} = \text{hp.} \times 375 = \text{a constant}$$

This curve represents the optimum characteristic of the locomotive on the basis that there are no losses in the transmission system. Since inevitable losses of power occur in the transmission (in the generator, the traction motors, wire and cables, traction-motor gear-

---

[*] This relationship is derived as follows:

From the fundamental definition of a horsepower, i.e., the amount of power required to lift a weight of 33,000 pounds a distance of one foot in one minute of time, we may write:

$$1 \text{ hp.} = \frac{\text{force in pounds} \times \text{velocity in feet per minute}}{33{,}000}$$

Converting "velocity in feet per minute" into "velocity in miles per hour" we have

$$\text{hp.} = \frac{\text{force in pounds} \times \text{velocity in miles per hour} \times 5280}{(33{,}000 \times 60)}$$

and since the force involved is the tractive effort of the locomotive, we may write

$$\text{hp.} = \frac{\text{T.E.} \times \text{m.p.h.}}{375}$$

ing), the full power output of the engine will not be realized in the performance characteristics of the locomotive.

Since the efficiencies of the generator and the traction motors are not constant over the whole load range, the resultant locomotive characteristic will depart from a true hyperbolic shape to a degree depending upon the shapes of the motor and generator efficiency curves, upon the utilization of engine power afforded by the generator characteristics, and upon the control connections employed.

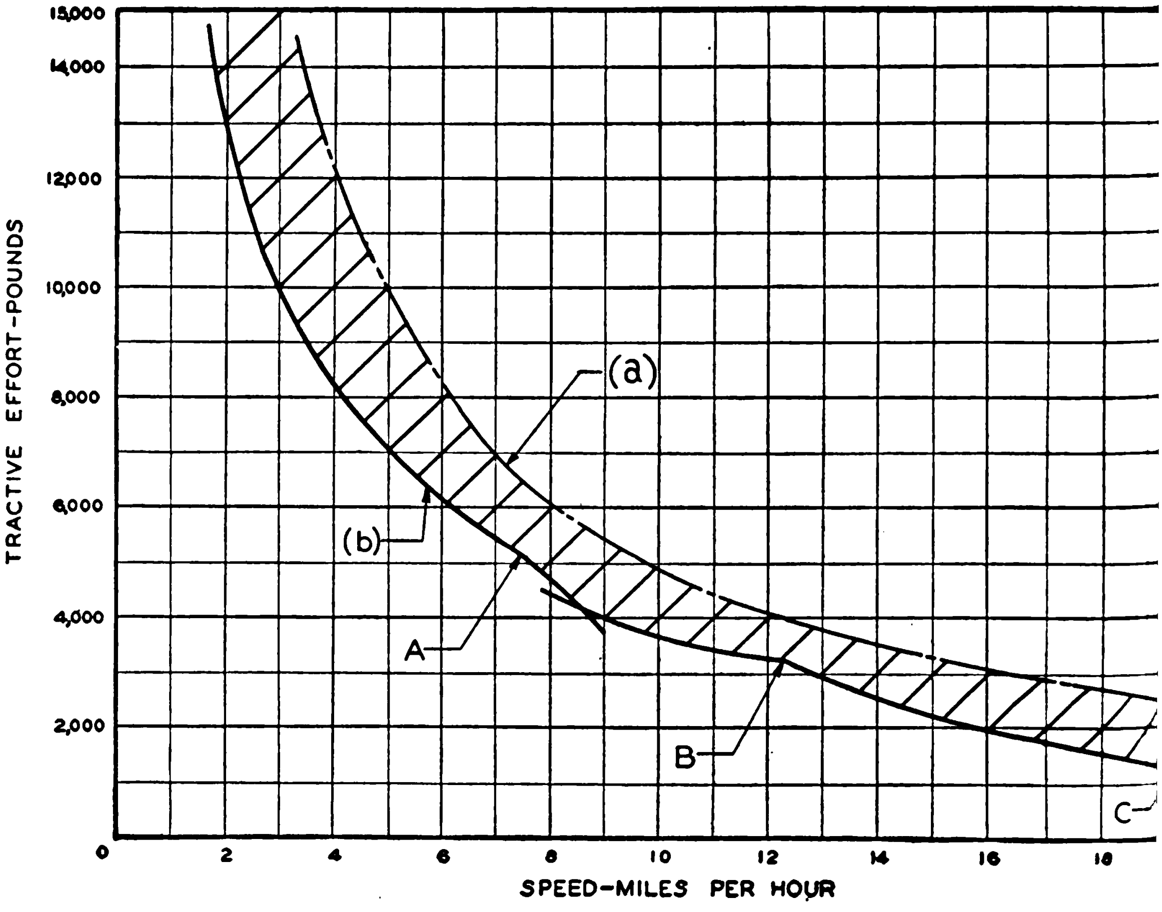

Fig. 8

In Fig. 8, curve (*a*), there is plotted in terms of speed and tractive-effort that part of the output of the Cummins 150-hp. engine which is available for input to the generator for traction purposes—i.e., 130 hp.

Curve (*b*) in the same figure illustrates the actual speed-tractive effort characteristic of the engine-generator-motor combination, i.e., the locomotive speed-tractive effort characteristic. The difference between the two curves is attributable to:

(1) Losses occurring in the process of converting the mechanical power delivered by the engine into electrical power as delivered by the generator, and in converting the electrical power delivered to the traction motor into mechanical power delivered at the locomotive wheels.

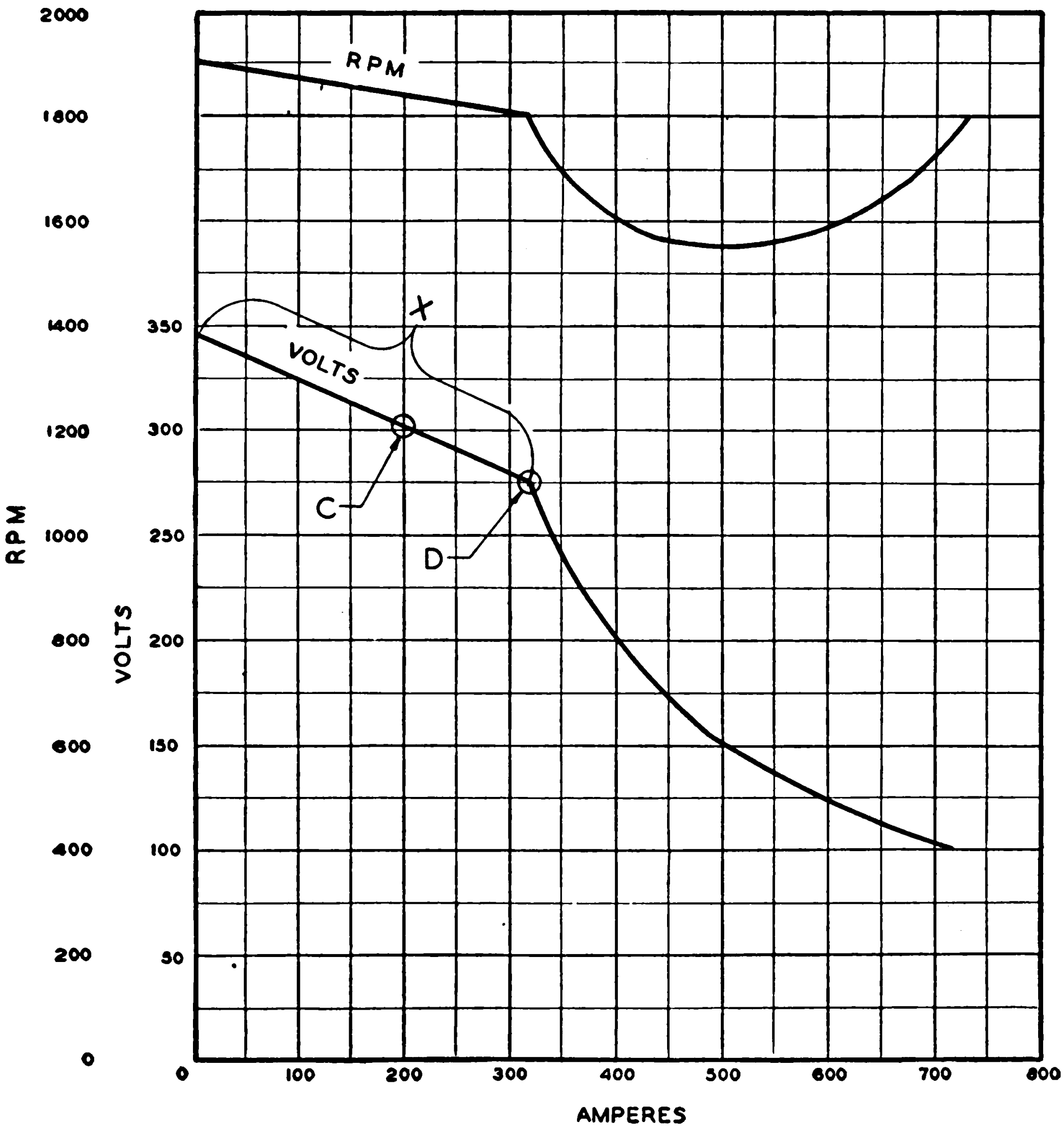

Fig. 9

(2) The inability of the electrical equipment to utilize all of the horsepower, which the engine is capable of delivering, over the entire range of locomotive operating speeds.

At the points *A* and *B* on Fig. 8, the engine is delivering 130 hp. to the generator at 1800 r.p.m.; at these two points the difference between curves (*a*) and (*b*) is due to generator and motor losses. At point *C*, however, the engine is not delivering 130 hp., since the generator characteristic is such that, at the values of current and voltage corresponding to 1200 pounds tractive-effort and 20 m.p.h., the gen-

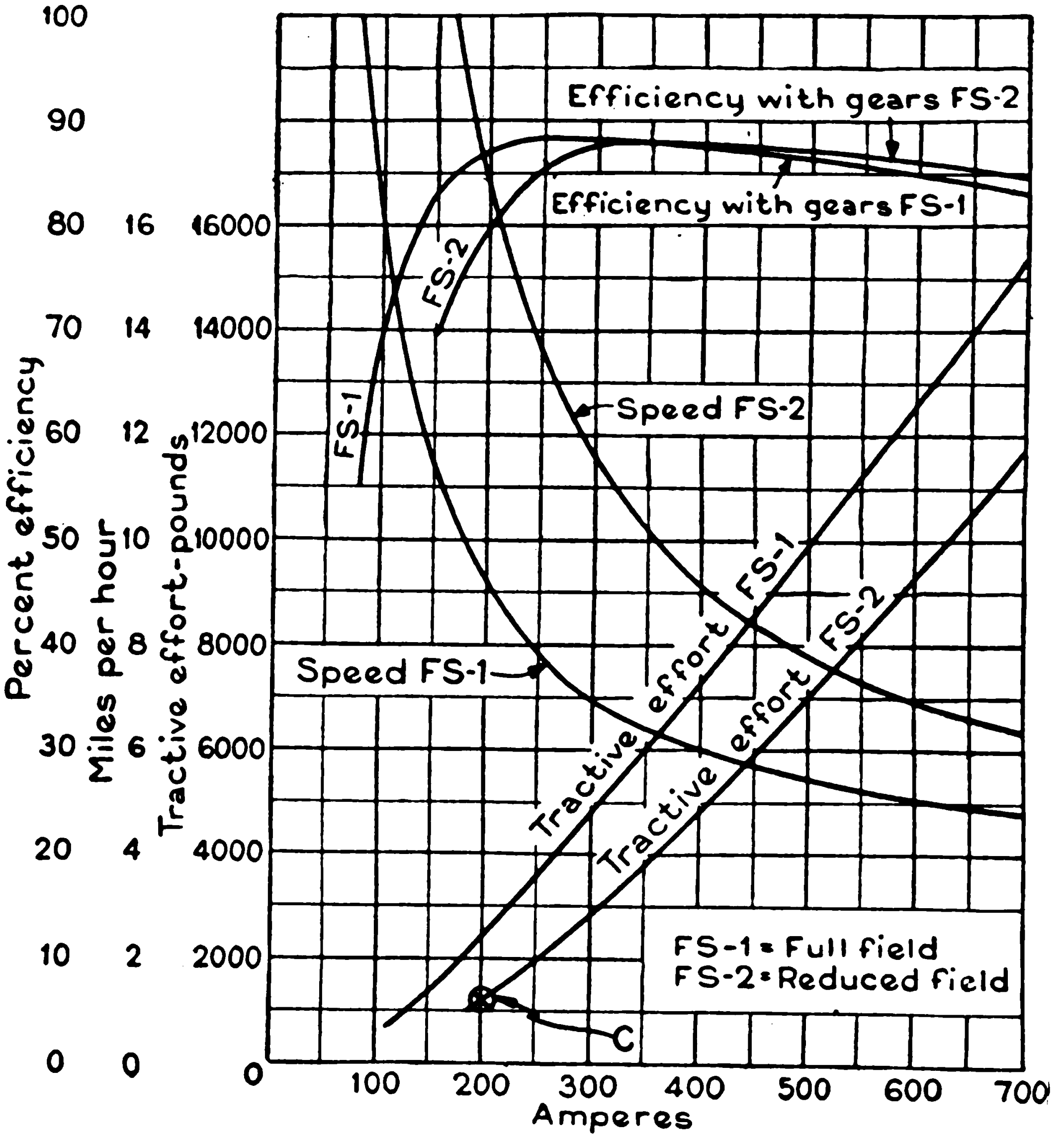

Fig. 10

erator cannot utilize 130 hp. The point *C* on Fig. 8 corresponds to points *C* on Figs. 9 and 10. The horsepower being delivered by the engine at point *C* on Fig. 9 is approximately 92 instead of 130 hp. as is being delivered at point *D*.

The "breaks" in the actual speed-tractive effort characteristic correspond to that portion of the generator characteristic on which full utilization of the engine output is not obtainable. This portion is designated by the letter x on Fig. 9, which shows the engine-generator characteristic employed in conjunction with the traction-motor characteristic of Fig. 10, to produce locomotive characteristic of Fig. 8.

For simplicity, this discussion was based on the simplest engine-generator-motor combination found in the industrial locomotive line—the single engine generator and single traction motor as on the 25-ton, two-axle unit. The generator, motor, and locomotive characteristics for other sizes are in individual locomotive specification sheets.

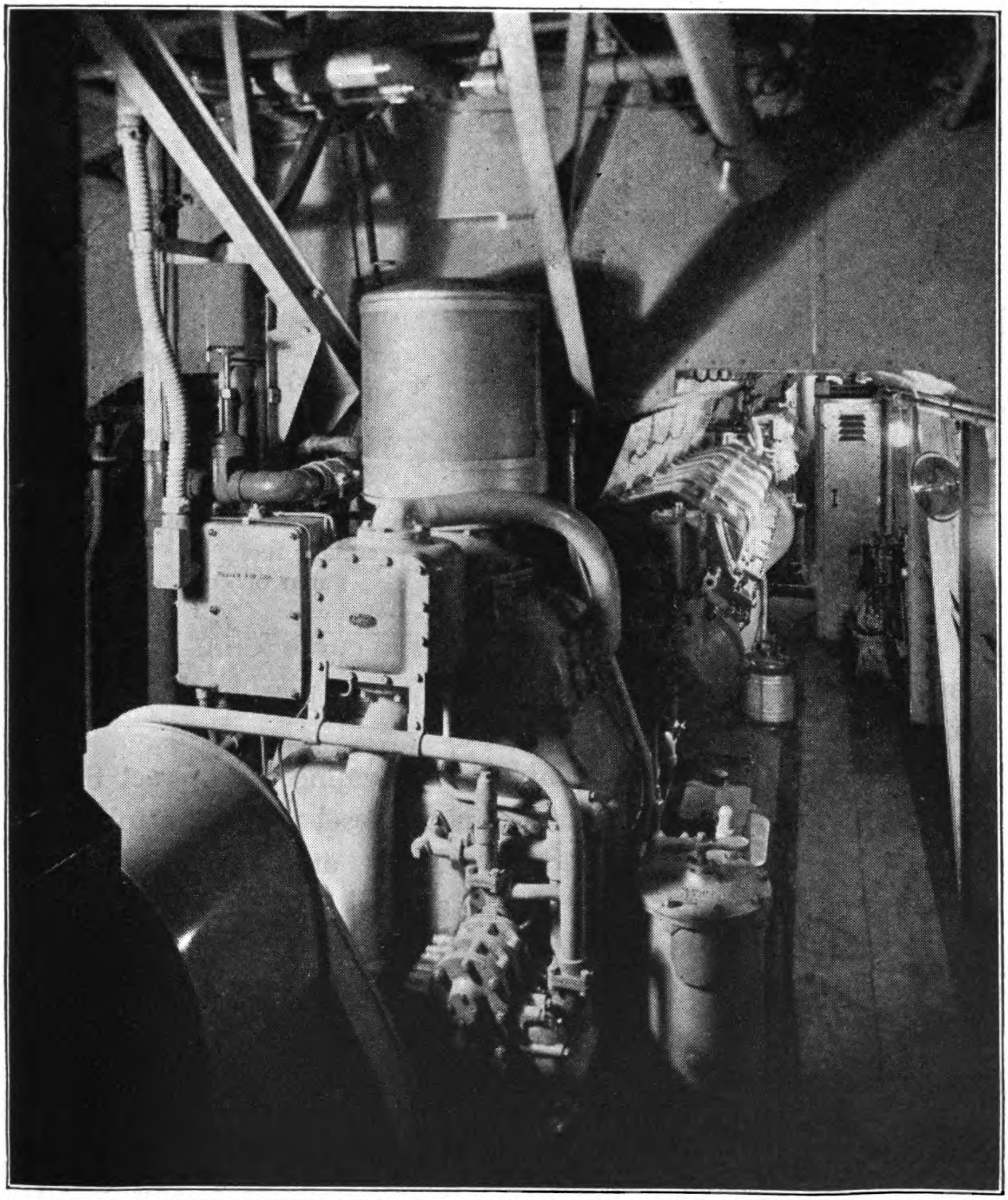

Interior View of Power Car on New City of Los Angeles with Driving Engines in Rear and Air Compressor in Foreground

TRAIN MOVEMENT

To accelerate a train, forces must be applied to balance those forces which oppose train movement and to provide additional force to accelerate the train. The opposing forces are:

Train resistance—friction, air resistance, rail bending, etc.

Grade resistance—due to lifting the train weight in ascending a grade (this force helps move the train in descending).

Curve resistance—friction between wheel flanges and rails on curves.

TRAIN RESISTANCE. A great many formulae have been devised to permit calculation of the resistance values of different types and weights of trains. The most satisfactory of these are the Davis formulae:

	Journal Friction	Flange Resistance	Wind Resistance
Locomotive resistance	$(\text{lbs.}) = 1.3 + \frac{29}{W}$	$+ .03\ V$	$+ \frac{.0024\ AV^2}{WN}$
Passenger car resistance	$(\text{lbs.}) = 1.3 + \frac{29}{W}$	$+ .03\ V$	$+ \frac{.00034\ AV^2}{WN}$
Freight car resistance	$(\text{lbs.}) = 1.3 + \frac{29}{W}$	$+ .045\ V$	$+ \frac{.00050\ AV^2}{WN}$

W being average tons per axle
V being speed in miles per hour
N being number of axles

A being frontal area of the train in square feet (area of cross section)

Figs. 11 to 14 show resistance values in curve form. Wide variations from these may result from heavy winds, poor track, and other similar variables.

No reliable tests are available to determine the correct figures for streamlined trains. For streamlined Diesel trains the following formulae are sometimes used, the Front and Rear comprising the axles of the train's front truck and its rear truck (and that portion of the bodies above) while Intermediate includes the rest of the train.

$$\text{Front and rear resistance (lbs.)} = 1.3 + \frac{29}{W} + .03\ V + \frac{.0016\ AV^2}{WN}$$

$$\text{Intermediate resistance (lbs.)} = 1.3 + \frac{29}{W} + .03\ V + \frac{.00022\ AV^2}{WN}$$

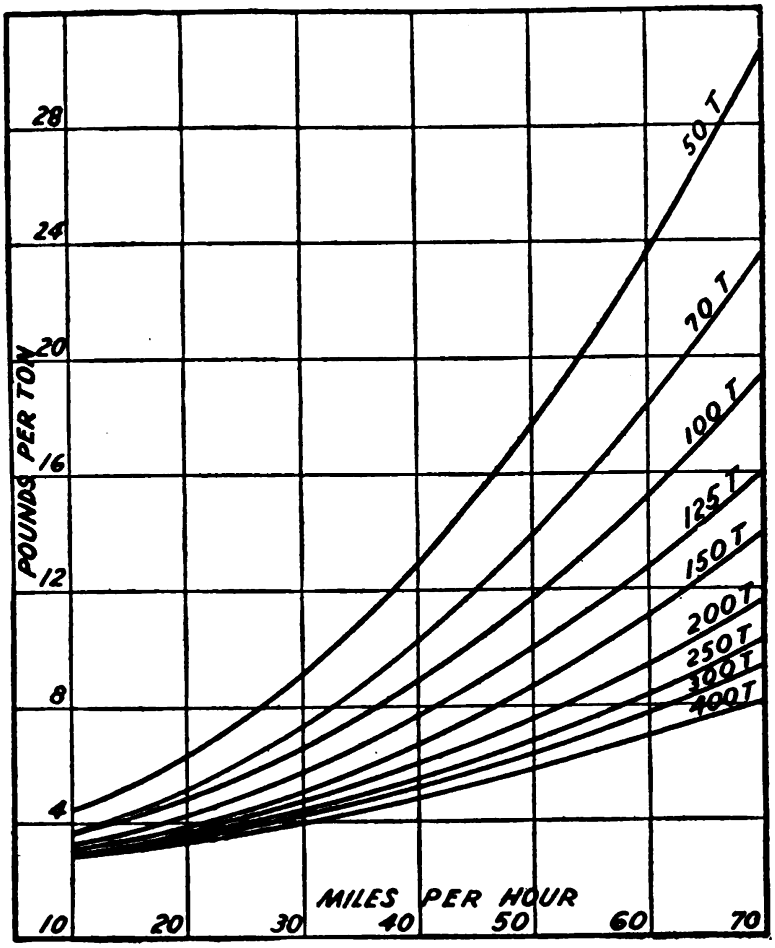

Fig. 11. Diesel Locomotive Resistance

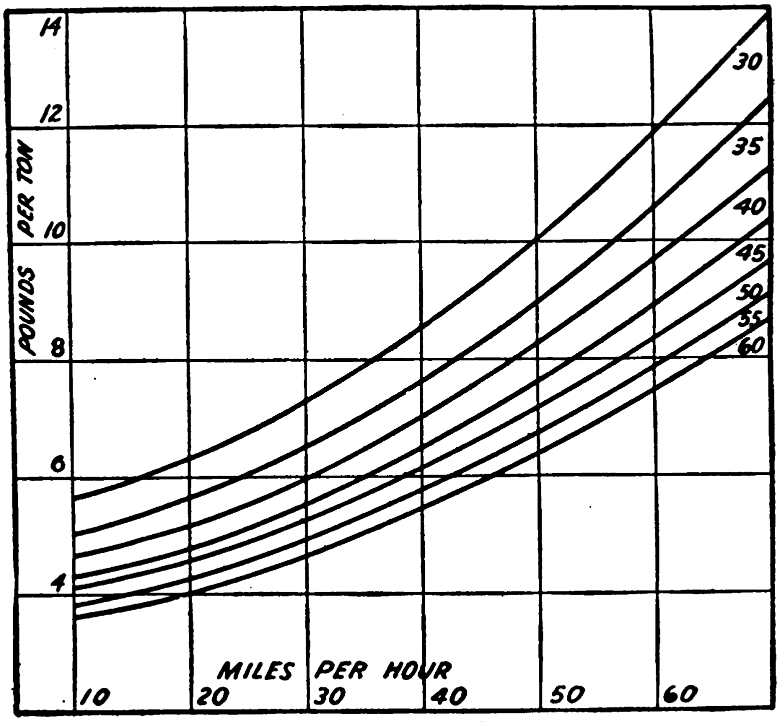

Fig. 12. 4-Axle Passenger Car Resistance

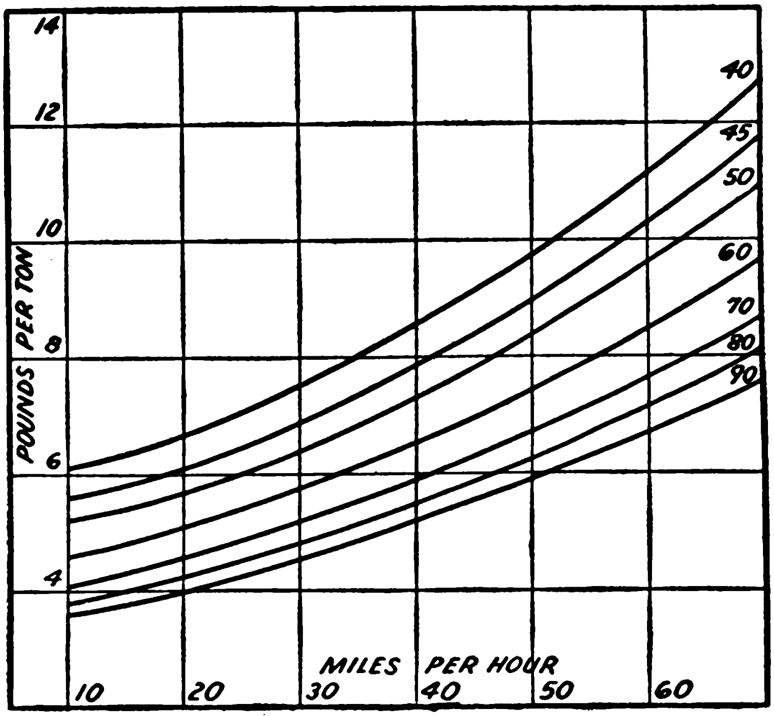

Fig. 13. 6-Axle Passenger Car Resistance

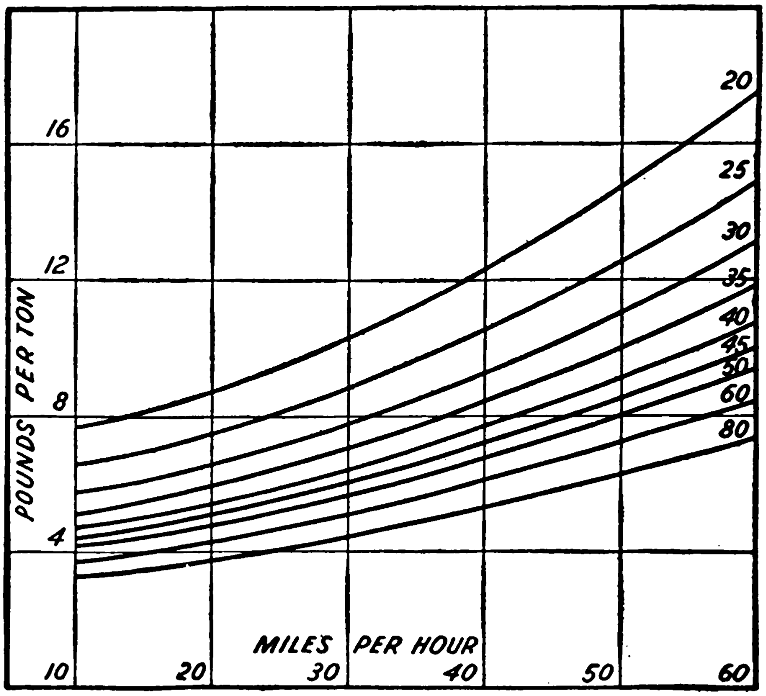

Fig. 14. 4-Axle Freight Car Resistance

GRADE RESISTANCE. The per cent grade is the number of feet rise per 100 feet length of track. Use 20 pounds resistance per ton of train weight for each per cent of grade. Thus:

Per Cent Grade	Resistance Per Ton	Per Cent Grade	Resistance Per Ton	Per Cent Grade	Resistance Per Ton
0.25	5 lbs.	1.25	25 lbs.	2.25	45 lbs.
0.50	10 lbs.	1.50	30 lbs.	2.50	50 lbs.
0.75	15 lbs.	1.75	35 lbs.	2.75	55 lbs.
1.00	20 lbs.	2.00	40 lbs.	3.00	60 lbs.

This results from the fact that on a 1 per cent grade a ton (2,000 lbs.) must be raised one foot for each hundred feet that the train advances: $\frac{2{,}000 \text{ lbs.} \times 1 \text{ ft.}}{100 \text{ ft.}} = 20 \text{ pounds}$

CURVE RESISTANCE. A one degree curve is one in which a hundred feet of track is $\frac{1}{360}$ of a complete circle. Curve resistance is estimated by various engineers from .4 to .8 pound per ton of train weight for each degree of curvature. In determining such resistance for performance calculations, however, it is safer to use .8 pound to 1 pound per ton of weight of that portion of the train which is in the curve.

ACCELERATION. The force required to accelerate a ton of train weight at a rate of one mile per hour each second, or 1.466 feet per second per second (fpsps), is (for acceleration in a straight line):

$$\text{Force} = 91.1 \text{ pounds}$$

There is another element which enters into this, however. This is the rotational acceleration of wheels, axles, motors, gears, etc., variously estimated to require 5 to 12 per cent more accelerating force. It has been found convenient to estimate that this requires 9.8 per cent greater force than for straight horizontal train acceleration, so that:

> One mile per hour per second acceleration requires a net force of 100 pounds per ton of train weight.

Thus, if the net tractive force available for accelerating a 1,000-ton train were 25,000 pounds (after accounting for all resistances), the acceleration would be $\frac{25{,}000 \text{ lbs.}}{1{,}000 \text{ tons}} = 25$ pounds per ton or an acceleration of .25 miles per hour per second.

BALANCING SPEED. The train speed at which all of the available tractive force is used to overcome the various resistances to train movement (leaving no net tractive force for acceleration) is called the *balancing* or *free-running speed.*

SPEED

1 m.p.h. = 1.466 ft. per second
10 m.p.h. = 14.66 ft. per second
20 m.p.h. = 29.33 ft. per second
30 m.p.h. = 44.00 ft. per second
40 m.p.h. = 58.66 ft. per second
50 m.p.h. = 73.33 ft. per second
60 m.p.h. = 88.00 ft. per second
70 m.p.h. = 102.66 ft. per second
80 m.p.h. = 117.33 ft. per second
90 m.p.h. = 132.00 ft. per second
100 m.p.h. = 146.66 ft. per second

TO DETERMINE TRAIN SPEED. Modern heavy rails are 39 feet long. The number of rail joints over which the train passes in 26.6 seconds is the same as the train speed. For the lighter 33 foot rails, count the joints for 22.5 seconds. Use proportional time for other rail lengths.

The speed of a steam locomotive hauled train may be easily determined if the wheel diameter is known. This is from the number of exhausts per minute. Since there is usually one accentuated exhaust out of four, counting the number of these gives the number of wheel revolutions in a given time, from which speed may be calculated.. Two tables give assisting data:

Wheel r.p.m. in 15 Seconds with 100-inch wheels	Corresponding m.p.h.*
25	29.75
30	35.70
35	41.65
40	47.60
45	53.55
50	59.50
55	65.45
60	71.40
65	77.35
70	83.30
75	89.25
80	95.20
85	101.15
90	107.10
95	113.05
100	119.00

If the Wheel Diameter in Inches is	M.p.h. is same as Wheel r.p.m. in
30	5.37 seconds
35	6.26 seconds
40	7.16 seconds
45	8.05 seconds
50	8.95 seconds
55	9.84 seconds
60	10.74 seconds
65	11.63 seconds
70	12.53 seconds
75	13.42 seconds
80	14.32 seconds
85	15.21 seconds
90	16.11 seconds
95	17.00 seconds
100	17.90 seconds

*For other wheel diameters multiply these m.p.h. figures by: $\frac{\text{other diam.}}{100}$

TIMING A MEASURED MILE

1 Mile in	Equals	1 Mile in	Equals
30 seconds......	120.0 m.p.h.	95 seconds......	38.0 m.p.h.
35 seconds......	101.3 m.p.h.	100 seconds......	36.0 m.p.h.
40 seconds......	90.0 m.p.h.	105 seconds......	34.2 m.p.h.
45 seconds......	80.0 m.p.h.	110 seconds......	32.7 m.p.h.
50 seconds......	72.0 m.p.h.	115 seconds......	31.2 m.p.h.
55 seconds......	65.4 m.p.h.	120 seconds......	30.0 m.p.h.
60 seconds......	60.0 m.p.h.	125 seconds......	28.8 m.p.h.
65 seconds......	55.3 m.p.h.	130 seconds......	27.6 m.p.h.
70 seconds......	51.4 m.p.h.	135 seconds......	26.6 m.p.h.
75 seconds......	48.0 m.p.h.	140 seconds......	25.7 m.p.h.
80 seconds......	45.0 m.p.h.	145 seconds......	24.9 m.p.h.
85 seconds......	42.4 m.p.h.	150 seconds......	24.0 m.p.h.
90 seconds......	40.0 m.p.h.	155 seconds......	23.2 m.p.h.

MOTIVE POWER

TRACTIVE FORCE. The tractive force of a Diesel motive power unit is the combined forces acting at the rims of all drivers tending to propel the motive power unit and its train.

DRAWBAR PULL. The drawbar pull of any motive power unit is the tractive force less all of the forces required to propel the motive power unit itself. Because resistance values are different for each condition of grade and curve, drawbar pull may be an exceedingly variable figure for any speed and is, therefore, much less useful than tractive force data.

VALUES OF ADHESION. If two surfaces are pressed together, it requires force to slide one along the other. It has been found that there is usually a very definite relation between the force required to slide and the force between them. This ratio, $\frac{\text{sliding force}}{\text{pressing force}}$ is called the coefficient of friction (or adhesion) of the two.

Various tests have been made to determine the coefficient of friction (adhesion) between train wheels and steel rails, the force pressing the two together being the weight on the points of contact. The results have been so varied that most engineers hesitate to fix definite adhesive values. A consistent set of tests of a wide variety of electric locomotives over a long period of years show starting adhesive values varying from 48% downward. It has been found, however, that on a clean, dry rail a factor of 35% is usually obtainable at start and a factor of 25% is normal on a wet rail if sand is used. However, as the train speed rises the movement of trucks and cabs, low spots in the rails, and various other causes tend to reduce the weight on drivers momentarily and thereby allow driving wheels to slip. The maximum useful adhesive values, then, must be reduced as the train speed rises. Fig. 15 shows reasonable adhesive values for dry rails and for wet rails using sand.

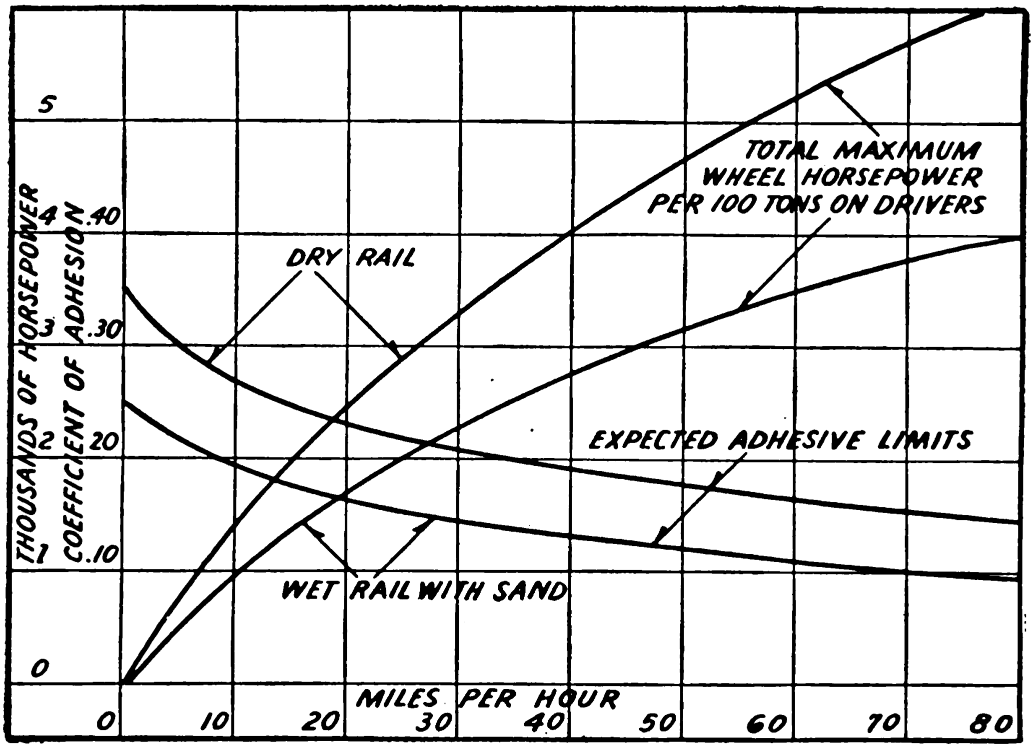

Fig. 15. Adhesion Factor Curves

MAXIMUM USEFUL HORSEPOWER FOR PROPULSION. Curves of adhesive values such as are shown by Fig. 15 automatically determine the maximum horsepower which may be expended at the driver rims for train propulsion. Since the adhesion is defined at a given speed, the horsepower is:

$$\text{Horsepower} = \frac{\text{Weight (pounds)} \times \text{adhesive factor} \times \text{m.p.h.}}{375}$$

$$= \frac{\text{W} \times \text{A} \times \text{m.p.h.}}{375}$$

For example, a pair of wheels loaded to 60,000 pounds on the rail, can utilize the following maximum horsepowers:

	Maximum Horsepower			Maximum Horsepower	
M.p.h.	Dry Rail	Wet Rail	M.p.h.	Dry Rail	Wet Rail
5........	238	157	25........	875	608
10........	428	304	30........	1000	692
15........	588	418	35........	1110	760
20........	735	520	40........	1210	830

For convenience, maximum horsepower curves for a locomotive having 100 tons weight on drivers are included in Fig. 15.

MAXIMUM TRACTIVE FORCE. The maximum tractive force which may be developed by any Diesel electric motive power unit (assuming that the electrical drive equipment design is suitably arranged) is determined by the weight on driving wheels and the coefficient of adhesion between the wheels and the rail. Steam motive power is usually designed to utilize less than 25 per cent adhesion (tractive force is less than 25 per cent of weight on drivers), whereas the electric motor drive with its smooth continuous torque permits (on the same basis) adhesive values of 30 per cent or better. Thus, with 100 tons weight on drivers (200,000 lbs.), a steam locomotive is normally designed for less than 50,000 pounds maximum tractive force, while a Diesel unit may develop over 60,000 pounds.

WEIGHT TRANSFER. In starting a train, the pull at the drawbar, or the acceleration of the body of a locomotive or railcar, or both, creates a "couple" or a turning force. For instance, assume a 2-axle locomotive with an 8 foot wheel base, both axles driven. If the center of the drawbar is 34½ inches above the rail and the tractive force and drawbar pull at start are each 10,000 pounds (neglecting locomotive resistance), the "couple" is 34½ inches x 10,000 pounds or 345,000 inch pounds. Since this must be balanced by a "couple" of equal value in the opposite direction, the tendency of the pull at the drawbar is to tip the locomotive over backward which acts to lift weight from the forward axle and transfer it to the rear axle, thereby creating the stabilizing "couple." The weight lifted from one and transferred to the other, then is:

$$\frac{345{,}000 \text{ in. lbs.}}{\text{the wheel base}} = \frac{345{,}000 \text{ in. lbs.}}{96 \text{ inches}} = 3{,}600 \text{ lbs.}$$

Similar weight transfer also occurs in swivel trucks with driving axles. The forward pair of wheels is relieved of weight and the rear pair gains weight. While the ultimate distribution of weight on the various axles of a locomotive depends to some extent upon the height of truck centerpins, the size of centerplates, the method of driving the axles, etc., the weight transfer couples must still balance the drawbar-tractive force couples. A table showing maximum effect which may be expected is shown below:

100-TON 4-AXLE SWIVEL TRUCK LOCOMOTIVE—ALL AXLES DRIVEN. CENTER-PINS ASSUMED AT DRAWBAR HEIGHT

Worst Weight Conditions—Forward and Rear Axles of Each Truck

Locomotive	8′0″ Wheel Base		7′0″ Wheel Base	
T.F.	Forward	Rear	Forward	Rear
60000	39200	60800	37700	62300
55000	40100	59900	38725	61275
50000	41000	59000	39750	60250
45000	41900	58100	40775	59225
40000	42800	57200	41800	58200
35000	43700	56300	42825	57175
30000	44600	55400	43850	56150
25000	45500	54500	44875	55125
20000	46400	53600	45900	54100
15000	47300	52700	46925	53075
10000	48200	51800	47950	52050
0	50000	50000	50000	50000

From the table for the 8′0″ wheel base it may appear that if equal tractive force is applied to each axle of a 4-axle, 100-ton, swivel truck locomotive, a nominal 30 per cent adhesive factor for the locomotive (60,000 lbs. or 15,000 lbs. per axle) really may mean a 38.2 per cent adhesion on the leading axle of each truck:

$$\frac{15{,}000 \text{ lbs. T.F.}}{39{,}200 \text{ lbs. Wt.}} = 38.2 \text{ per cent adhesion}$$

Actually, however, when electric motors drive the axles, the motor weight is redistributed in the truck when the motors exert tractive force, so that the forward axle carries more of the motor weight. Therefore, the actual maximum adhesive factor is normally less than 35 per cent.

WEIGHT TRANSFER COMPENSATION. Recognizing that the transfer of weight from one axle to another of rail motive power is unavoidable, engineers have compensated for this on some cars and locomotives by an adjustment of the tractive force of individual motors during the early stages of acceleration. This is relatively easy where two motors are connected in series for the start, since the shunting of one motor field will reduce its tractive force relative to that of the other motor. If, then, the two motors of one swivel truck or of a 2-motor locomotive are connected in series and the field of the leading motor is shunted, the tractive forces may be made approximately proportional to the weights on drivers. The position of the reverser automatically indicates which is the leading motor. The objections to this weight transfer compensation are that the motors are worked harder (operated at higher temperature), the equipment purchase price is increased, and additional control complication results.

HORSEPOWER DEVELOPED AT THE WHEELS.

Actual hp. required for propulsion = hp. at wheels =

$$\frac{\text{m.p.h.} \times \text{T.F.}}{375}$$

Actual hp. developed by each traction motor =

$$\frac{\text{m.p.h.} \times \text{T.F.}}{375 \times \text{No. of Motors}}$$

Engine hp. required for propulsion =

$$\frac{\text{Actual hp. (total) at wheels}}{\text{Transmission Efficiency}}$$

Total engine hp. required = hp. for propulsion + hp. for auxiliaries.

Fig. 16 shows the range of Diesel engine horsepowers which are normally applied to industrial and railroad switching locomotives. These represent the actual horsepowers which may be developed, not the nominal ratings sometimes applied by builders of the smaller sizes of Diesel engines.

CHARACTERISTIC CURVES OF DIESEL MOTIVE POWER.

The formula $\text{hp.} = \frac{\text{m.p.h.} \times \text{T.F.}}{375}$ represents a hyperbolic curve. Assuming no transmission losses, then, the maximum performance characteristic curve of Diesel motive power (using full available engine power at all times) is hyperbolic in shape. Because of unavoidable transmission losses, the actual performance curve is a hyperbola modified by the transmission efficiency, which varies slightly at different speeds and tractive forces.

The characteristic curve of Diesel electric motive power cannot be changed by changes in the type of motor, in gear ratio, or of wheel diameter, except as this may affect the efficiency of the drive. However, such a change in equipment, while not affecting the shape, may alter the unloading point up or down along the curve.

TRACTION MOTOR REVOLUTIONS PER MINUTE. For a traction motor geared to an axle:

$$\text{Motor r.p.m.} = \frac{336 \times \text{m.p.h.}}{\text{Wheel Diam. (inches)}} \times \text{Gear Ratio } \frac{(\text{Gear})}{(\text{Pinion})}$$

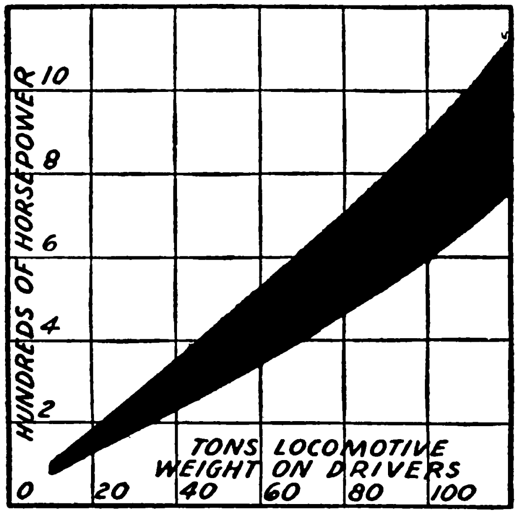

Fig. 16. Diesel Switcher Horsepower Ranges

COMPARISON OF TRACTION MOTORS. Since there is no fixed voltage for electric traction motors for Diesel motive power, motors may not be compared on an ampere or voltage basis. The following method is recommended:

(1) Select a gear ratio and wheel diameter for each so that they will have the same maximum safe m.p.h. and each will meet the standard gear clearance to the rail.

(2) Compare the continuous tractive forces (not amperes or voltage) with comparable gear ratio and wheel diameter.

To determine locomotive weight—find weight necessary to move one car up a given grade and multiply by number of cars.

Assumptions:

Car weight (tons)	25	45	60	75
Pounds resistance per ton	7	5	4	4
Locomotive adhesion	20%	20%	20%	20%

Example. To haul ten 60-ton cars up a 2% grade at 6 m.p.h. requires 7.5 × 10 = 75 tons on drivers (Fig. 17) and 80 × 10 = 800 Diesel engine hp. (Fig. 18).

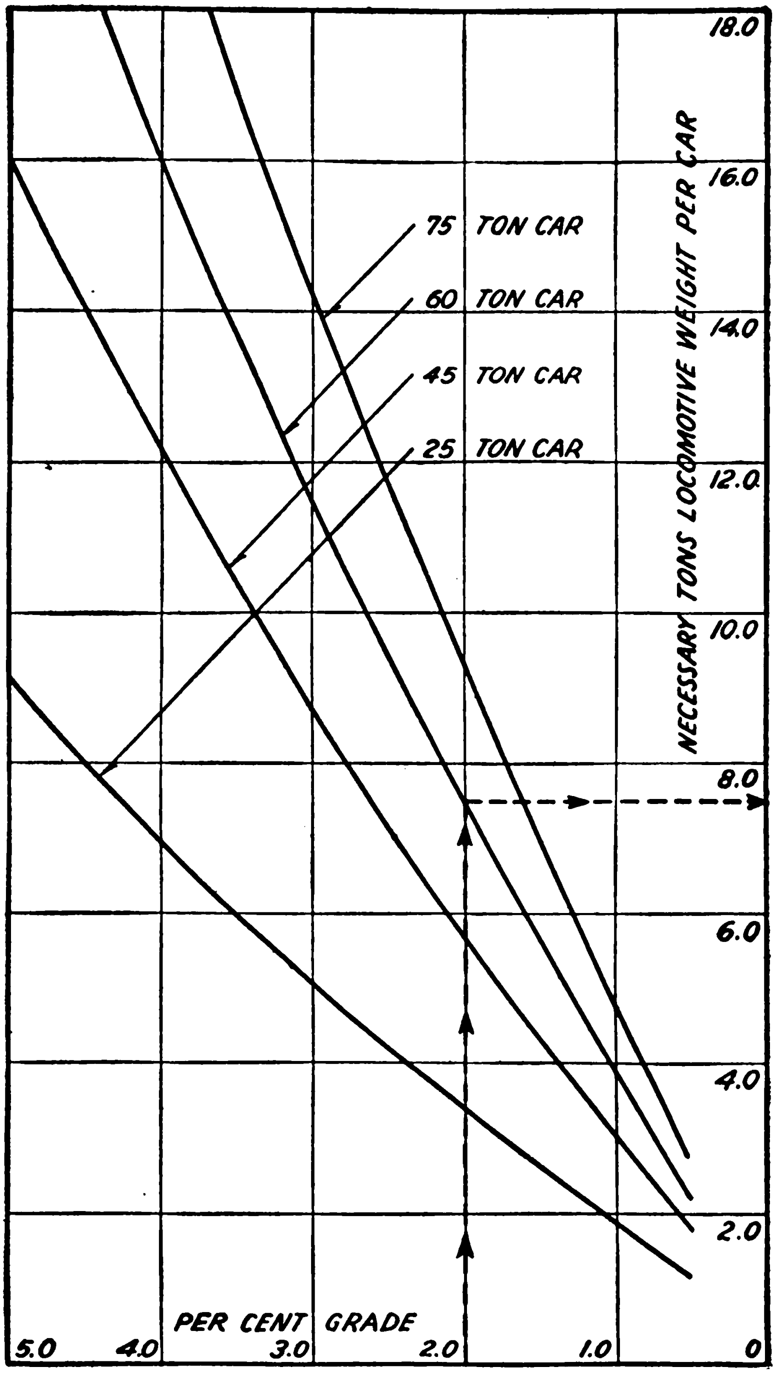

Fig. 17. Locomotive Selection Chart

DIESEL MOTIVE POWER APPLICATION

TO DETERMINE LOCOMOTIVE WEIGHT AND POWER.

The weight of a Diesel locomotive is normally determined by the worst pull which must be made at any time. The horsepower of the Diesel engine or engines is fixed by that combination of tractive force and necessary speed which results in the greatest power. In determining these, operators often overestimate speed. Estimating 4 m.p.h. instead of 3 m.p.h. necessitates a 33 per cent increase in engine size, which may be very expensive.

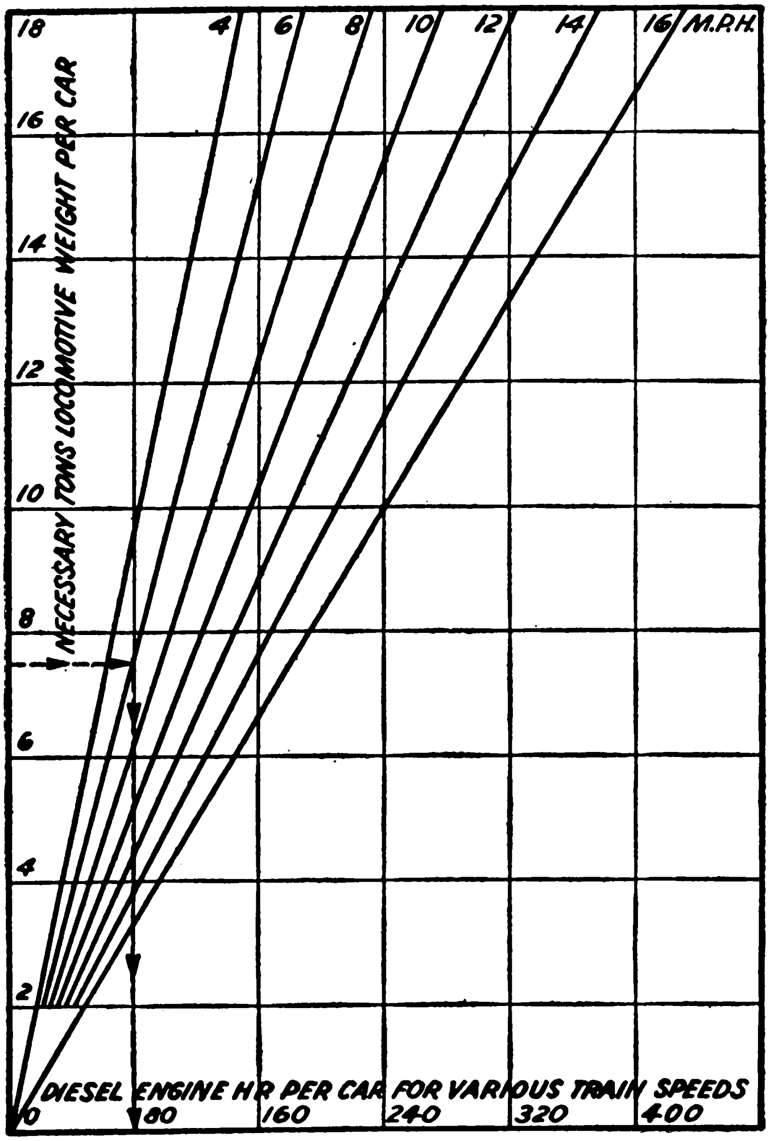

Fig. 18. Locomotive Selection Chart

Figs. 17 and 18 form an approximate guide for the selection of a Diesel locomotive. This is at 20 per cent adhesion, which results in heavier locomotives than some manufacturers like to apply. If higher adhesive values are deemed acceptable, find the weight and power from the curve, then decrease the locomotive weight in proportion to the ratio of 20 per cent to the new adhesive value selected. If the service must be performed regardless of weather or rail conditions, it is preferable not to exceed the 20 per cent values chosen for the curves.

COMPARISON OF STEAM AND DIESEL PERFORMANCE. Diesel locomotives out-perform steam in switching service because more power may be applied to the wheels in the initial stages of an acceleration. Fig. 19 shows this clearly. Since area on this curve represents distance, it may be seen that the Diesel is far ahead 32 seconds after the start and from then on the steam locomotive must gain speed in order to catch up. On all runs up to 1,675 feet the Diesel is the faster.

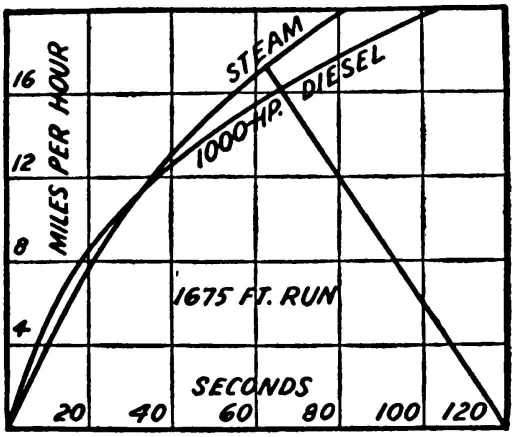

Fig. 19. Comparative Performance of 0-8-0 Steam and 1000 Hp. Diesel Switching Locomotives

For long runs, the Diesel engine horsepower must more nearly approach the maximum steam horsepower or the steam unit has a definite advantage.

FUEL CONSUMPTION. If the steam locomotive fuel for a given switching service is known, the corresponding Diesel fuel may be estimated:

1 gal. Diesel fuel = 140 pounds of coal—light switching
1 gal. Diesel fuel = 120 pounds of coal—medium switching
1 gal. Diesel fuel = 110 pounds of coal—heavy switching
1 gal. Diesel fuel = 100 pounds of coal—transfer runs

For estimating where no previous fuel consumptions are known, Diesel fuel oil consumption may be taken as:

Light switching	.045 gal. per hour per ton on drivers
Heavy switching	.065 gal. per hour per ton on drivers
Transfer runs	.023 gal. per mile per ton on drivers

ESTIMATING GRADES. Stand on the track and estimate a point up the grade on a level with the eyes. Step off the distance to the point selected or count the rails. This gives distance and rise from which the per cent grade may be calculated. A bottle partly filled with liquid and held horizontally gives a water line which may serve as a rough level to estimate a point on the grade which is on a level with the eyes.

ESTIMATING DEGREE OR RADIUS OF TRACK CURVATURE. Draw a string from the outside rail across the curve to form a chord just tangent to the inside rail. Measure the gauge in feet and the length of the chord in feet. The radius of curve is then (all dimensions in feet):

$$R = \frac{\text{Chord}^2}{8 \times \text{Gauge}} = \frac{C^2}{8\,G}$$

The radius of a 1-degree curve is 5730 feet. The radius of a 2-degree curve is half that of a 1-degree curve, while a 3-degree curve is one-third of 5730 feet, etc.
Therefore:

$$\text{Radius of Curvature in feet} = \frac{5730}{\text{Degree of Curve}}$$

$$\text{Degree of Curve} = \frac{5730}{\text{Radius in feet}}$$

SWIVEL TRUCK OPERATION AROUND CURVES. Without widening of gauge, the sharpest curve which a truck with two axles can negotiate is:

$$\text{Radius in feet is} = \frac{\text{Wheel base in feet}}{K} = \frac{W}{K}.$$

$$\begin{aligned} K &= .234 \text{ for 20 to 24 inch wheels} \\ &= .214 \text{ for 25 to 30 inch wheels} \\ &= .180 \text{ for 31 to 40 inch wheels} \\ &= .160 \text{ for 41 to 50 inch wheels} \\ &= .150 \text{ for 51 to 60 inch wheels} \end{aligned}$$

These figures are based on M.C.B. standards for flanges and rails. Normally the overhang of the locomotive, the swing of the coupler, and other considerations may determine the minimum radius of curvature which a locomotive may negotiate with a train.

ESTIMATING THE EQUIVALENT GRADE OF A RAILROAD. For ease in calculating the performance of Diesel motive power operating a train over a given profile, it is usually convenient to establish a figure for the average grade of the road which will permit calculations of averages rather than requiring a detailed calculation of each individual grade section. This average grade is normally known as the equivalent grade. In rolling country where there is no definite grade trend, the kinetic energy stored in a train when descending a grade is used to assist the Diesel motive power in carrying the train up the next grade. For this type of profile the equivalent grade may be estimated:

$$\text{Equiv. grade} = 100 \times \frac{(\text{sum of rises minus } \tfrac{1}{2} \text{ sum of falls})}{\text{Length of line}}$$

All figures being in feet.

For other types of profile, it may be necessary to break the run into sections, for each of which a definite grade trend and average grade figure may be established.

SAFE WHEEL LOAD ON TRACK. The approximate axle loadings permissible for different weights of rails are:

0 to 60 pound rail—500 pounds axle load per lb. of rail wt.
61 to 90 pound rail—600 pounds axle load per lb. of rail wt.
91 upward pound rail—700 pounds axle load per lb. of rail wt.

This assumes proper cross tie and ballast support.

CONVENIENT EQUIVALENTS

1 Kilowatt = 1000 watts
1 Kilowatt = 1.34 hp.
1 Kilowatt = 44257 foot-pounds per minute
1 Kilowatt = 56.87 B.t.u. per minute
1 Horsepower = 746 watts
1 Horsepower = 33000 foot-pounds per minute
1 Horsepower = 42.41 B.t.u. per minute
1 B.t.u. = 778 foot-pounds
1 B.t.u. = 0.2930 watt-hours
1 Kilometer = .621 miles
1 Meter = 1.094 yards
1 Kilogram = 2.2046 pounds
1 Met. Ton = 1.1025 U.S. ton of 2000 pounds
1 Liter = .2645 U.S. gal. = 2.2 pounds fresh water

QUESTIONS AND ANSWERS ON LOCOMOTIVE APPLICATION

Q. What are the fundamental rules applying to Diesel-electric locomotive application?

A. (1) Obtain the tonnage rating of the particular locomotive in question; this rating should apply to the specific job the locomotive is required to do.

(2) Then do not exceed this rating except when authorized to do so under emergency conditions.

Q. Why should the rating be rigidly observed?

A. The traction motors may be damaged if the rating is exceeded. The traction motors will work better the colder they are. The harder they work the hotter they get and, when they reach a certain temperature, the heat breaks down the solder and insulation. The traction motor is like a man, both can stand a certain temperature continuously, for short-time periods (15 minutes or so). For instance, a man can work hard for a little while in a heated room, but soon he will collapse.

Q. Is it difficult to make an accurate tonnage rating on a Diesel-electric locomotive? An approximate rating?

A. To make an accurate tonnage rating over a long line may take many days of calculating. An approximate rating may be determined quickly. When making an approximate rating, be certain the locomotive can safely handle it. An approximate rating is a temporary rating only and should be replaced by a definite tonnage rating.

Q. What is the difference between the tonnage rating for a steam locomotive and for a Diesel-electric locomotive?

A. The tonnage rating is set on the steam locomotive to protect the railroad; that is, the tonnage is limited on a steam locomotive so it will be able to get through without stalling and blocking the line. If the steam locomotive is stalled, it is not damaged; the track is simply blocked. If the Diesel-electric locomotive is stalled, the track is not only blocked but the traction motors may have been damaged by overheating in attempting to handle a heavier tonnage than the locomotive was rated for.

Q. What relation is there between the ammeter on the locomotive and the tonnage rating?

A. If there is a large ammeter which reads traction motor amperes, use this. (Do not confuse this with the small ammeter showing battery charge.) This large ammeter should be marked so that when the hand gets up to a certain valve, it is unsafe to operate the locomotive. It is all right to go up into this danger zone for short accelerations as in switching. It is, however, dangerous to stay in the danger zone; ways to keep out of it are:

(1) Apply full power in order to pick up speed, because the higher the locomotive speed the less the amperes.

(2) If you cannot reach the higher speed, it may be possible to keep out of the danger zone by reducing the throttle.

(3) If the ammeter still persists in staying in the danger zone, stop the train and cut the tonnage. Note: it is easy to cut the tonnage in yard service. In road service on a long grade, it will be necessary to go back to the last siding, or cut the train on the main line, or take the first half up the grade to the next siding, then return for the remainder.

Do not rely entirely on the ammeter as a tonnage gauge. The ammeter, being a delicate instrument, may be as much as 20% to 30% off. It is much better to first set a tonnage rating by calculation. Then check this in operation by observing the ammeter. This may show where the calculated tonnage rating could be improved. Have the ammeter calibrated every 6 months if possible.

Q. What is the starting tractive effort of a Diesel-electric locomotive?

A. The starting tractive effort depends upon the condition of the rail. For a good rail, take 30%; for a poor wet rail, use about 20%. A good average to use is 25%. For example, a 44-ton locomotive weighs 88,000 pounds. Then 25% of this is $88{,}000 \times .25 = \frac{88{,}000}{4} =$ 22,000 pounds starting tractive effort for average conditions.

Q. What is the continuous tractive effort?

A. This rating is set by the manufacturer and is the maximum tractive effort the locomotive can operate at continuously without damaging the motors. If the manufacturer's rating is not available, an approximate rating can be used—that is, ½ of the average starting tractive effort. For example, the continuous tractive effort of a 44-ton locomotive would be approximately $\frac{22{,}000}{2}$ pounds $=$ 11,000 pounds or $\frac{88{,}000}{8} =$ 11,000 pounds. (That is the total weight of the locomotive in pounds divided by 8.)

Q. What is the short-time rating?

A. This is a rating between the starting and continuous rating. Let us call it the rating halfway between the two. For example, on the 44-ton locomotive, it would be 16,500 pounds. This is (22,000-11,000) divided by 2 plus 11,000 pounds. This approximate rating should not be used for more than 15 minutes out of each hour of operation. Detailed calculations by the manufacturer should be obtained to determine the correct short-time rating on each job in order to get the most out of the locomotive.

Q. When should each of these tractive effort ratings be used?

A. The starting rating should be used only for starting. If the locomotive starts a train and is not able to pick up its speed, the train should stop. Then a sufficient number of cars should be dropped off so the locomotive will pick up speed.

The short-time rating should only be used, as a rule, in yard service.

The continuous rating should not be exceeded, except under emergency conditions when operating in road service between two terminals or two yards.

Q. At what speed should the locomotive be moving for the short-time or continuous rating?

A. This is determined by a simple calculation as follows:

$$\text{Miles per Hour} = \frac{(\text{Horsepower at Wheels} \times 375)}{\text{Tractive Effort}}$$

This formula applies to any locomotive. The first thing is to find the horsepower at the wheels. This is obtained by looking at the locomotive or engine nameplate to get the total horsepower. Then:

Total Horsepower	= 100%
Hp. for Auxiliaries	= 15%
Hp. to Generator	= 85%
Loss in Transmission	= 20%
Hp. at Wheels	= 65%

For example, let us again assume we are using the 44-ton locomotive and it has two engines of 200 hp. each.

400 hp. Total = 100%
65% = 260 hp.

$$\text{m.p.h.} = \frac{(260 \text{ hp.} \times 375)}{11{,}000 \text{ pounds}} = 9 \text{ m.p.h.}$$

This means that any speed less than 9 m.p.h. will exceed the locomotive continuous rating; all speeds above 9 m.p.h. will be safe up to the speed limit of the locomotive.

Another example is the short-time rating:

$$\text{m.p.h.} = \frac{(260 \text{ hp.} \times 375)}{16{,}500 \text{ pounds}} = 5.8 \text{ m.p.h.}$$

Q. Is there any general rule to observe as to minimum speed on short-time rating even though the calculations show otherwise?

A. Yes, 5 m.p.h. is the minimum speed. Regardless of the size of the locomotive, it is not advisable to load it to such an extent that it cannot accelerate up to 5 m.p.h. or more in yard service when the throttle is opened wide. If this rule is not observed, the locomotive may be damaged and train movements in the yards may be slowed up. Do not load the locomotive beyond its rating and you will have an efficient, fast-moving locomotive.

Q. What determines the maximum speed limit of a locomotive?

A. The centrifugal force of the traction motor armatures limits the speed of the locomotive. The armature is geared to the axle and, if it revolves too fast, it will throw itself apart. The engineer must realize there is no warning. He may get by once or twice but each time the coils are loosened, so that finally the coils come completely loose and lock the wheels; then the locomotive cannot be towed even until the traction motor is removed.

Q. What would be the approximate tonnage rating for a 44-ton Diesel-electric locomotive in service in a flat level yard?

A. In yard service, the short-time rating should not be exceeded except when starting or accelerating a train. A 44-ton locomotive has 16,500 pounds tractive effort. Short-time rating at 5 m.p.h. as per preceding answers. If the yard is perfectly level, assume the friction to be 10 pounds per ton. $\frac{16{,}500 \text{ pounds}}{10}$ is 1,650 tons total. Deduct 44 tons for the locomotive and this leaves a trailing load of about 1,600 tons.

Q. What would be the approximate tonnage rating for a 44-ton Diesel-electric locomotive in service in a yard which slopes, having a .2% grade?

A. The rating on the level should be used for the downgrade. Grade resistance is 20 pounds per ton for each 1% grade upgrade, so

$$.2\% = 20 \times .2 = 4 \text{ pounds per ton}$$

$$10 \text{ pounds plus } 4 \text{ pounds} = 14 \text{ pounds per ton}$$

$$\frac{16{,}500}{14} = 1{,}180 \text{ tons}$$

Then deduct the locomotive, and the trailing tonnage is approximately 1,130 tons. In any case, the locomotive should not go less than 5 m.p.h. once it has completed acceleration, unless it is operating at reduced throttle.

Q. What would be the tonnage rating of a 44-ton Diesel-electric locomotive on a coal trestle with a 4% grade and 200 feet long?

A. Again you use the assumed short-time rating of 16,500 pounds. The friction on the level is 10 pounds per ton. The friction on the grade is 20 pounds × 4 = 80 pounds per ton. 80 + 10 = 90 pounds per ton total. $\frac{16{,}500 \text{ pounds}}{90} = 184$ tons. Deduct the locomotive and you have a trailing tonnage of 140 tons. This would take care of two 70-ton loaded coal cars. If the coal trestle were 2,000 feet long instead of only 200 feet long, the short-time rating could not be used; the continuous rating would be the limiting factor.

Suppose that after figuring this, you found you had four 80-ton cars and someone suggested the locomotive handle two of these even though it exceeded the limit. This suggestion will be made occasionally on various jobs. The thing to do in this case is to make 4 separate trips. It would be found that little time would be lost if done this way because:

(1) No time would be lost in arguing what is best to do.

(2) With only one car the locomotive would go much faster on the grade so each trip will take less time.

(3) No time would be lost in inspecting the locomotive after the job in order to make certain no damage was caused when hauling more than its rating.

Q. Should 10 pounds per ton friction always be used in yard service?

A. No. Friction curves as shown in Figs. 11 to 14 can be used but complete data must be used, including correct curvature friction and grades.

In narrow gauge or some foreign service, freight cars will only have 4 wheels; this means higher friction per ton. In this class of service, use 20 pounds per ton of friction. For example, how many 10-ton cars can be handled with a 44-ton locomotive in a yard sloping .3% upgrade?

The locomotive still has 10 pounds friction per ton on the level and 20 pounds on the grade × .3 = 6 pounds per ton. This makes the locomotive having a friction of $10 + 6 = 16$ pounds per ton, and $44 \times 16 = 704$ pounds total. The tractive effort for short time is 16,500 pounds; deducting 700 pounds, we have 15,800 pounds left to handle the cars. (This 15,800 pounds is called "drawbar pull" or the pull at the locomotive coupling.)

The car friction is 20 pounds on the level and on the grade is 20 pounds × .3 = 6 pounds per ton. Total car friction is 26 pounds per ton. Then $\frac{15{,}800 \text{ pounds}}{26} = 600+$ tons. As the cars weigh 10 tons each, this means 60 cars can be handled at one time in this yard. Again it must be emphasized that, after sixty 10-ton cars are actually hauled by the 44-ton locomotive with full throttle, the speed must come up to 5 m.p.h., otherwise some cars must be dropped to get to that speed.

Q. How can the grade of the track be determined?

A. The correct method is to use a surveyor's instrument. An approximate method would be to place a carpenter's level on a perfectly straight piece of wood or metal several feet long, then:

(1) Kneel by the rail and hold this straight piece perfectly level.

(2) Sight along this piece until both the front and rear of it are lined up with a certain spot of the rail some distance ahead upgrade. Have a second man mark this spot.

(3) Have a third man measure the distance from the edge you sighted along to the top of the rail directly below.

(4) Measure the length of the rail from directly below to the spot ahead previously marked.

(5) Divide the short vertical distance by the long distance along the rail; the answer is the per cent of grade.

For example: The third man who measures the vertical distance cuts a stick the length of this vertical distance. He then walks up the track measuring with this stick and finds that the distance up to the spot is just 143 lengths of the vertical distance. The grade is then $\frac{1}{143} = .007 = .7\%$. The friction for this grade would be 20 pounds × .7 = 14 pounds per ton.

Q. If a 44-ton locomotive is operating in road service up this .7% grade, how many 30-ton freight cars can it handle safely?

A. In road service, the continuous rating which we previously calculated by our short-cut method to be 11,000 pounds tractive effort should not be exceeded.

The speed at this tractive effort for say a 400 hp. locomotive is

$$\text{m.p.h.} = \frac{(400 \times .65 \times 375)}{11{,}000} = 9 \text{ m.p.h.}$$

Referring to Fig. 11, you find that the friction of the locomotive at 9 m.p.h. is about 5 pounds per ton.

Refer to Fig. 14 and the friction of the 30-ton freight car at 9 m.p.h. is about 6 pounds per ton.

However, use 6 pounds per ton for the train on the level.

The grade friction is $20 \times .7 = 14$ pounds per ton. The total friction is $14 + 6 = 20$ pounds per ton.

The total tractive effort is 11,000 pounds and this divided by 20 pounds = 550 tons. 550 — 44 = 500 (approx.) tons the locomotive can handle. Then $\frac{500}{30} = 16$ cars, the maximum number of 30-ton cars the locomotive can handle in road service where this grade is encountered.

Q. Can this locomotive handle this same 16-car train if there is also a short 1% grade (say 500 feet long)?

A. First, let us see the tractive effort required.

There will be 20 pounds per ton friction for the 1% grade. The level friction is 6 pounds per ton. The total friction is 26 pounds per ton. The total tonnage including the locomotive is 550. This $550 \times 26 = 14{,}300$ pounds. The answer is: Yes, this locomotive can handle these 16 cars on this short grade as the tractive effort required is below the short-time rating of 16,500 pounds for this locomotive, in accordance with the above calculation.

Q. How many cars of 30 tons each can a 1000 hp., 125-ton, 4-motor road switcher handle in road service up a .7% grade on a long extended profile?

A. The continuous rating of this locomotive, in accordance with the preceding method of calculating, is $\frac{250{,}000 \text{ pounds}}{8} = 31{,}250$ pounds. The speed would be $\frac{(1000 \times .65 \times 375)}{31{,}250} = 8$ m.p.h. The friction of this locomotive according to Fig. 11 at 8 m.p.h. is 4 pounds per ton. On the .7% grade, the friction is 14 pounds. Total friction is 18 pounds per ton. 125 tons × 18 pounds = 2,250 pounds used to move the locomotive. Then 31,250 — 2,250 = 29,000 pounds left to haul the cars. The car friction on level is 6 pounds plus the grade of 14 pounds, giving a total of 20 pounds per ton car friction. Then $\frac{29,000}{2} =$ 1,450 tons. $\frac{1,450}{30}$ tons per car = 48 cars maximum that can be handled on this grade.

Q. If this same 1,000 hp. locomotive had 6 motors instead of 4 motors, what would its continuous rating be?

A. With 50% more motors, the continuous tractive effort should be 50% more but that is not the case. When a locomotive has 6 motors instead of 4, the additional motors have been added so there will be a reserve of power even under tropical conditions. Therefore the ratings of both the 4- and 6-motor road switcher may be taken as:

Starting $\frac{250,000 \text{ pounds}}{4} = 62,500$ pounds

Short Time 46,775 pounds at 5 m.p.h.

Continuous $\frac{250,000 \text{ pounds}}{8} = 31,250$ pounds at 8 m.p.h.

It should be emphasized that no Diesel-electric locomotive, particularly one this size, should be used in road service, except in emergency, without a careful study of all operating and road conditions.

Q. A careful study of applying a locomotive properly to road service consists of what?

A. First, it means a man qualified to make the study should be obtained, unless the manufacturer makes the study. This man will obtain:

(1) Complete locomotive data, including a tractive effort curve, tractive effort ratings, and traction motor heating curves.

(2) Complete locomotive and car friction curves, for level, grades, and curve conditions.

(3) Complete weight and data on car equipment.

(4) Operating schedule, including all stops.

(5) Condensed profile, including all slowdowns.

(6) Any special instructions, including clearance diagrams.

With this information the train is "run" over the profile by setting down the necessary calculations. The sheets frequently used for making these calculations have 17 items, each in a separate column. This method of calculating generally progresses at the rate of 10 to 20 m.p.h.

CONCLUSION

These questions and answers on locomotive application show us that a rough estimate of the locomotive tonnage rating can be made on the job. However, to get the most out of the locomotive, a tonnage rating should be set by the manufacturer or qualified authority for each size of locomotive on each specific assignment and if possible this rating should be checked in service with instruments. Just because the Diesel-electric locomotive will take a heavy overload on short-time ratings in emergency cases is no reason it should be abused at other times. Put a tonnage rating on the locomotive and live up to its demands.

INDEX