TB SIG 154

WAR DEPARTMENT TECHNICAL BULLETIN

GENERAL STANDARDS FOR VEHICULAR ANTENNA INSTALLATIONS

Ref.: ***TM 11–230C, Radio Set SCR–694–C***
TM 11–272, Radio Sets SCR–210–A, –B, –C, –D, –E, –F, –G, –H, and –J; and Radio Sets SCR–245–A, –B, –C, –D, –E, –F, –G, –H, –J, –K, –L, –M, –N, –P
TM 11–273, Radio Set SCR–193–A, B, C, D, and E
TM 11–275, Radio Set SCR–284–A
TM 11–600, Radio Sets SCR–508–(*), SCR–528–(*) and SCR–538–(*)
TM 11–605, Radio Sets SCR–509–(*) and SCR–510–(*)
TM 11–615, Radio Sets SCR–609–A and SCR–610–A
TM 11–620, Radio Sets SCR–608–A and SCR–628–A
TM 11–630, Radio Set SCR–506–A
TM 11–637, Radio Set AN/VRC–3

War Department, Washington 25, D. C., January 1945

Note. Official nomenclature followed by the symbol ( ) is used to indicate all models of the equipments.

1. GENERAL. The information in this Technical Bulletin is a summary of the general standards for vehicular antenna installations, particularly using Mast Bases AB–15/GR, MP–65/A, and is to be used for background and orientation purposes only. The required type and length of antenna lead-in and number of mast sections given

RESTRICTED

on the latest Signal Corps installation drawings, or in Technical Manuals of the TM 11–2700 series, should be used whenever a specific installation is made. Approved alternative and emergency installations of antenna lead-in are covered in this Technical Bulletin.

2. MAST BASES AB–15/GR, MP–65, AND MP–65–A. *a.* Mast Base AB–15/GR is a lightweight replacement for Mast Bases MP–48 and MP–48A. Mast Base MP–65 or MP–65–A replaces Mast Bases MP–37 and MP–57. Mast Sections MS–116, MS–117, and MS–118 are used with Mast Bases AB–15/GR, MP–65, and MP–65–A in place of Mast Sections MS–49 through MS–53. Installations of Mast Bases MP–65 and MP–65–A normally require a five-section antenna consisting of three Mast Sections MS–116 and one each Mast Section MS–117 and MS–118. Installations of Mast Base AB–15/GR normally require a one-, two-, or three-section antenna.

b. When three or more mast sections are required, the necessary number of Mast Section MS–116 serves as the lowest portion of the antenna; Mast Section MS–117 fits into the top of Mast Section MS–116, and Mast Section MS–118 fits into the top of Mast Section MS–117. When a two-section antenna is required, Mast Section MS–117 is used as the lower section and Mast Section MS–118 as the upper section. When a one-section antenna is required, Mast Section MS–116 or MS–117 should be used as the single section.

c. Mast Bases MP–65 and MP–65–A are provided with a binding post for connection of wire lead-in. Mast Base AB–15/GR is provided with a binding post adapter, a grounding clamp, and one Plug PL–259. When the binding post adapter is used for a wire lead-in installation (fig. 5), the grounding clamp must be removed from the mast base assembly. When a coaxial line terminating in Plug PL–259 is required (fig. 6), the grounding clamp must be used.

3. MAST BASES MP–48 AND MP–48–A. *a.* Mast Base MP–48 is normally furnished with an internal assembly that has coaxial fittings (assembly No. 7, fig. 1), an upper external binding post (item 16), and a binding post adapter (item 12) that fits into the coaxial fitting at the bottom. A coaxial cable to be used with this mast base should terminate in Amphenol Connector AN–3106–14–3ST (item 13) (stock No. 2A2088–48/C4) or in coupling, Lapp No. 26243 (stock No. 2Z3291–7). In installations using the upper binding post, the internal assembly should be removed in all cases. If an installation requires the use of the bottom binding post and the binding post has been removed from the mast base to be used, the internal assembly may be removed and the wire fed through the mast base, as shown in assembly No. 6, (fig. 1). Installation of the bottom binding post is made by securing internal assembly No. 7 (fig. 1) in the mast base and locking

it into place by tightening the setscrew (item 9) at the top of the mast base. The adapter (item 10) is slipped into place at the bottom of the base. The washer (item 17) and collar (item 18) are slipped over the adapter and tightened securely. After the complete assembly of the adapter, the wire plug (item 7–B) should protrude into the adapter. The binding post adapter (item 12) will slip into place at the bottom of the mast base and can be screwed up on the adapter.

b. Mast Base MP–48–A (fig. 3) is normally furnished with a 6-foot length of Wire W–128 fed through the mast base. An upper external soldering terminal (item 8) is also provided. For all coaxial installations, Cord CD–689, which consists of a length of Wire W–128 with coaxial fittings, must also be procured to serve as the internal assembly (fig. 2). The coaxial cable used should terminate in a coupling, Lapp No. 26243 (item 16) or in Amphenol Connector AN–3106–14–3ST.

4. MAST BASES MP–37 AND MP–57. Mast Bases MP–37 (fig. 7) and MP–57 (fig. 8) are normally used to support antenna Mast Sections MS–49 through MS–53. A stud which is inserted in the top of the mast base must be removed before the mast sections can be inserted. The internal wire assembly of both mast bases terminates in a binding post connector which is secured to the bottom of the mast base. No coaxial cable installations of these mast bases are required. Mast Base MP–57 uses a smaller insulator at its base than that used in Mast Base MP–37. It can be readily used to replace Mast Base MP–37. Mast Base MP–37 cannot be used to replace Mast Base MP–57.

5. COAXIAL CABLES. *a.* The following is a description of the coaxial cables required for vehicular installations covered in table II.

(1) Cordage CO–282, Cable WC–562, and Cable RG–11/U are interchangeable coaxial cables of 75 ohms impedence. Cords CD–636, CD–1297, and CG–67/MRQ–2 are cords made up of 9 feet of one of the above cables, and terminate in the following connectors:

Cord	*Connector*
CD–636	2 AN–3106–14–3ST
CD–1297	1 AN–3106–14–3ST, 1 Plug PL–259
CG–67/MRQ–2	2 Plugs PL–259

Note that, since Cordage CO–282, Cable WC–562, and Cable RG–11/U are interchangeable coaxial cables, by using the proper type of connectors and cable lengths, Cords CD–636, CD–1297, and CG–67/MRQ–2 may be made up from any one of these cables or from another cord. For example, Cord CD–1297 may be made from Cord CD–636 by removing the connector at one end and replacing it with Plug PL–259.

(2) Cord CG–102/TRC–7 is a 7-foot coaxial cable of 50 ohms impedance, terminating at each end in Plug PL–259.

b. When Cable WC–562, Cable RG–11/U, or Cordage CO–282 is supplied in bulk, it may be cut to the length required, within the limits specified in table II. When a particular cord, such as Cord CD–1297 is specified on table II, it must not be cut to any other length. Any excess cable should be coiled and secured in the vehicle.

Caution: Use of a coaxial cable or number of mast sections other than specified in table II will cause a mismatch between the set and the antenna, overload the transmitter, shorten the tube life, and reduce the effective range of the set.

6. RADIO SETS SCR–193–( ), SCR–245–( ), SCR–284–( ), AND SCR–506–( ). When Mast Base MP–37 or Mast Base MP–57 is replaced by Mast Base MP–65 or MP–65–A in installations of Radio Sets SCR–193–( ), SCR–245–( ), SCR–284–( ), and SCR–506–( ), the only other difference in the installation is in the mast sections used. Mast Sections MS–49 through MS–53 are replaced by three Mast Sections MS–116 and one each MS–117 and MS–118. Table II gives the maximum length of lead-in wire for satisfactory operation of each radio set. The lead-in should be as short as is practicable for the particular installation.

7. RADIO SETS SCR–508–( ), SCR–528–( ), SCR–608–( ), AND SCR–628–( ). *a.* When, in a particular installation of these radio sets, only a short length of lead-in is required, Wire W–128 may be used.

(1) This wire must not exceed 40 inches in length when—

(*a*) Mast Base AB–15/GR and Mast Sections MS–116, MS–117, and MS–118 are used, and the lead-in is connected to the binding post at the bottom of the mast base.

(*b*) Mast Base MP–48 or MP–48–A and Mast Sections MS–51, MS–52, and MS–53 are used, and the lead-in is connected to the upper external terminal of the mast base. In these installations the internal lead-in must be removed.

(*c*) Mast Base MP–48 and Mast Sections MS–51, MS–52, and MS–53 are used, and the lead-in is connected to the binding post at the bottom of the mast base.

(2) The lengths of Wire W–128 must not exceed 52 inches when Mast Base MP–48 (in the absence of the bottom binding post) or MP–48–A and Mast Sections MS–51, MS–52, and MS–53 are used, and the lead-in wire is fed through the mast base. The 52–inch length includes the length of wire inside the mast base.

b. For installations requiring Mast Base Bracket MP–52 mounted on Cabinet CH–74–( ), Mast Sections MS–52 and MS–53 are used with Mast Base MP–48 or MP–48–A. The actual length of lead-in required by the installation, including the length of wire inside the

mast base, is 52 inches if Mast Base Bracket MP–52 is mounted on the left side of Cabinet CH–74–( ), and 58 inches if the bracket is mounted on the right side. When Mast Base AB–15/GR is used, the two-section antenna consists of Mast Sections MS–117 and MS–118. The legnth of lead-in to the bottom binding post of the mast base is 40 inches if Mast Base Bracket MP–52 is mounted on the left side of Cabinet CH–74–( ), and 46 inches if the bracket is mounted on the right side.

c. In all other installations where a lead-in length greater than 40 inches is required, Cable WC–562, Cable RG–11/U, or Cordage CO–282 must be used. For Radio Sets SCR–508–( ) and SCR–528–( ), the maximum length of coaxial lead-in is 10 feet, the minimum 8 feet. For Radio Sets SCR–608–( ) and SCR–628–( ) the maximum length of coaxial lead-in is 8 feet, the minimum 6 feet. Lengths outside of these limits will not permit proper loading of the set or matching of the Phantom Antennas A–83 (for Radio Set SCR–608) and A–62 (for Radio Set SCR–508).

8. RADIO SET SCR–510–( ). *a.* Mast Base AB–15/GR, MP–48, or MP–48–A may be used with Radio Set SCR–510–( ) with a lead-in consisting of 2 feet of Wire W–128. A two-section antenna must be used in this installation. The internal lead-in of Mast Base MP–48 or MP–48–A must be removed, and the upper external terminal used. Lead-in lengths other than 2 feet of wire are permitted in those installations where the installation drawings specify lengths up to 36 inches, but lengths as close as possible to 2 feet should be used. In those cases where Terminal Box TM–206–A is mounted on the radio set, Wire W–128 should be fastened to the binding post provided on that box. The change-over link inside Terminal Box TM–206–A must be set to the proper position.

b. Terminal Box TM–206–A is a waterproofed box which replaces the antenna mounting block assembly at the rear of the case of Radio Receiver and Transmitter BC–620–( ), part of Radio Sets SCR–509–( ) or SCR–510–( ). Connections are provided at the top of the terminal box for Antenna AN–45–( ) and Wire W–128. At the bottom of the unit, there is provided a coaxial socket, to which may be added a right-angle coaxial Adapter M–359 (stock No. 2Z299–359). A table of various tap settings of coil L–1 is provided on the inside back cover of Terminal Box TM–206–A, showing the several installations which may be used. Radio Sets SCR–509–( ) and SCR–510–( ) produced after March 1945 will have Terminal Box TM–206–A as standard equipment. Field modifications will require the removal of the antenna mounting block assembly and its replacement with Terminal Box TM–206–A.

c. If a lead-in longer than 2 feet is required with Radio Set SCR-510-( ), a three-section antenna and a coaxial cable lead-in must be used with Mast Bases AB-15/GR, MP-48, or MP-48-A. Use of less than three mast sections will result in shortened tube life. Terminal Box TM-206-A is required, to be mounted on the radio set in place of the antenna mounting block assembly. The change-over link inside the terminal box must be set to the coaxial position. In an emergency, Terminal Box TM-206 may be used. This box is mounted on the antenna mounting block assembly. The cords specified in table II are 9-foot coaxial cables, terminating in the required connectors to connect to the mast base and terminal box used in each installation (see par. 5).

d. The proper positions of the tap connector pins in the socket of loading coil L-1 in Radio Receiver and Transmitter BC-620-( ) are different for different antenna installations. Table I shows the posi-ttions of the pins for maximum transmitter power output.

Table I.—Radio Receiver and Transmitter BC-620-( )

INSTALLATIONS

Channels	2′ Wire W-128 Mast Base AB-15/GR Mast Sections MS-117, MS-118		2′ Wire W-128 Mast Base MP-48 or MP-48-A Mast Section MS-52, MS-53		Over 2′ lead-in Terminal Box TM-206-A Mast Base AB-15/GR Cord CG-67/MRQ-2 (9′0″) Mast Sections MS-116, MS-117, MS-118	Over 2′ lead-in Terminal Box TM-206-A, Mast Base MP-48 or MP-48-A Cord CD-1297 (9′0″) Mast Sections MS-51, MS-52, MS-53
	Using Terminal Box TM-206-A	Using antenna mounting block	Using Terminal Box TM-206-A	Using antenna mounting block		
	Position of pins in socket of loading coil L-1					
0-9	8	8	8	8	8	8
10-19	7	8	7	8	8	8
20-29	7	6	7	6	8	8
30-39	7	4	7	4	8	6
40-49	5	3	5	3	7	5
50-59	4	2	4	2	7	4
60-69	4	2	4	2	6	5
70-79	3	1	3	1	6	5

Table I.—Radio Receiver and Transmitter BC-620-( )—Continued

EMERGENCY INSTALLATIONS USING TM-206

Channels	Over 2′ lead-in Terminal Box TM-206 Mast Base MP-48 or MP-48-A Cord CD-636 Mast Sections MS-51, MS-52, MS-53	Channels	Over 2′ lead-in Terminal Box TM-206 Mast Base AB-15/GR Cord CD-1297 (9′0″) Mast Sections MS-116, MS-117, MS-118
Position of pins in socket of loading coil L-1			
0-44	7	0-29	8
45-54	6	30-49	7
55-64	5	50-59	6
65-79	3	60-79	4

9. RADIO SET SCR-610-( ). a. Mast Base AB-15/GR, MP-48, or MP-48-A may be used with Radio Set SCR-610-( ) with a lead-in consisting of 3 feet of Wire W-128. A three-section antenna must be used in this installation. The internal lead-in of Mast Base MP-48 or MP-48-A must be removed, and the upper external terminal used. When Terminal Box TM-218 is mounted on the radio set, Wire W-128 should be fastened to the binding post provided on that box. The change-over link inside Terminal Box TM-218 must be set to the proper position.

b. Terminal Box TM-218 is a waterproofed box to replace the antenna mounting block assembly mounted at the rear of Radio Receiver and Transmitter BC-659-( ), part of Radio Sets SCR-609-( ) and SCR-610-( ). A link jumper provides a means of changing from Antenna AN-29-C to a coaxial line terminating in a coaxial socket, to which may be added a right-angle coaxial Adapter M-359. Terminal Box TM-218 is furnished only for use with coaxial installations using Mast Base AB-15/GR.

c. If a lead-in longer than 3 feet is required with Radio Set SCR-610-( ), coaxial cable must be used. When using Mast Base AB-15/GR, Terminal Box TM-218 must be mounted on the radio set in place of the antenna mounting block assembly. The change-over link inside the terminal box must be set to the coaxial position. A three-section antenna must be used. Cord CG-67/MRQ-2 (9 feet 0 inches) is used to connect Terminal Box TM-218 to Mast Base AB-15/GR (see par. 5).

d. For a coaxial installation of Radio Set SCR-610-( ) with Mast Base MP-48 or MP-48-A, Terminal Boxes TM-210 and TM-211 are required. Terminal Box TM-211 is mounted on the mast base, and Terminal Box TM-210 on the antenna mounting block assembly, in accordance with the installation instructions furnished with these terminal boxes. If the radio set has Terminal Box TM-218 already installed, this box must be removed and the antenna mounting block assembly and Terminal Box TM-210 must be installed in its place. Cable RG-11/U, Cable WC-562, or Cordage CO-282 is used to connect Terminal Box TM-210 to the mast base.

10. RADIO SET SCR-619-( ). All vehicular installations of Radio Set SCR-619-( ) require Mast Base AB-15/GR, a three-section antenna, 9 feet of coaxial cable (see par. 5), and Terminal Box J-72/GR, located at Mast Base AB-15/GR, to match the antenna impedance to the impedance of the cable.

11. RADIO SET SCR-694-( ). Vehicular installations of Radio Set SCR-694-( ) require Mast Base MP-65 or MP-65-A, a five-section antenna, and a lead-in consisting of no more than 5 feet of

Wire W–128. Emergency use of Radio Set SCR–694–( ) will permit the use of Wire W–128 up to 6 feet 6 inches, but one Mast Section MS–116 must be removed, leaving only a four-section antenna. Use of more than 5 feet of Wire W–128 with a five-section antenna will make it impossible to resonate the transmitter of Radio Set SCR–694–( ) over the complete frequency range.

12. RADIO SET AN/VRC–3–( ). Vehicular installations of Radio Set AN/VRC–3–( ) require Mast Base AB–15/GR, a two-section antenna, 7 feet of coaxial cable (see par. 5*a*(2)), and Terminal Box TM–217. In an emergency, Mast Base MP–48 or MP–48–A and a length of Wire W–128 may be used. The total length of lead-in plus mast sections (mast base length not included) should be 120 inches plus or minus 16 inches.

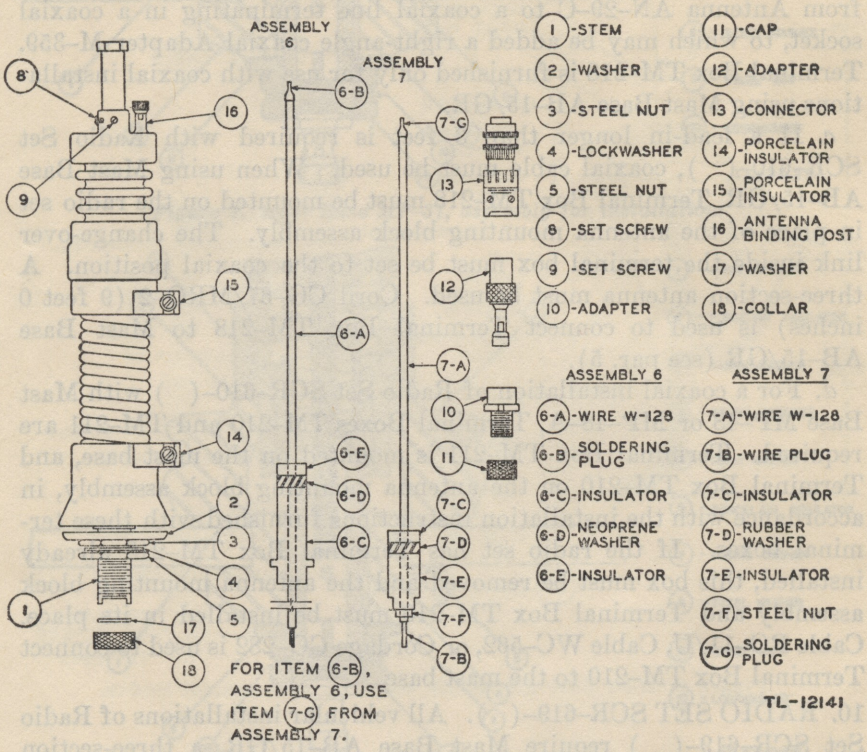

Figure 1. Mast Base MP–48, assembly for installation.

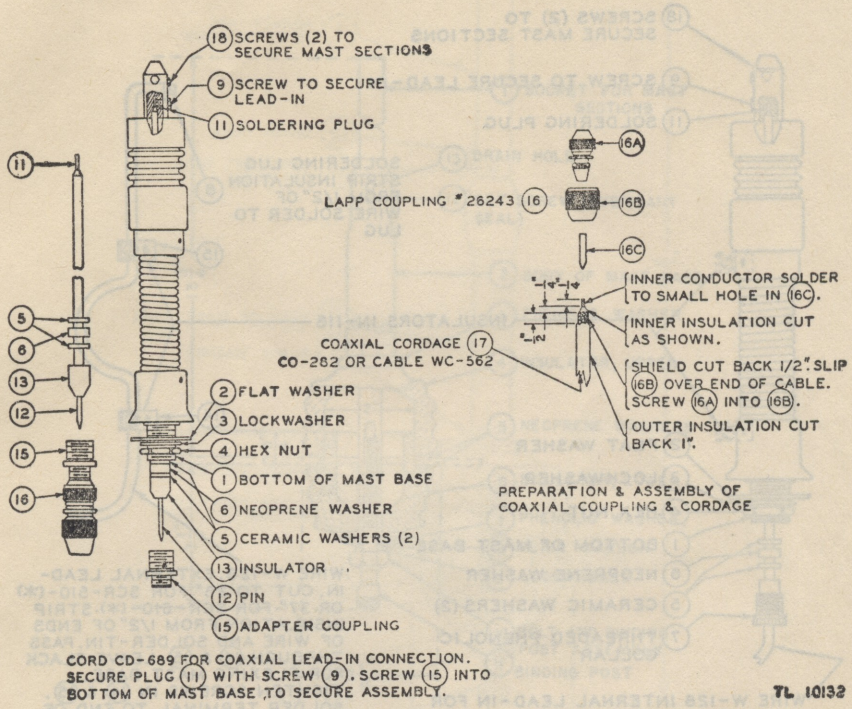

Figure 2. Mast Base MP-48-A, assembly with coaxial lead-in.

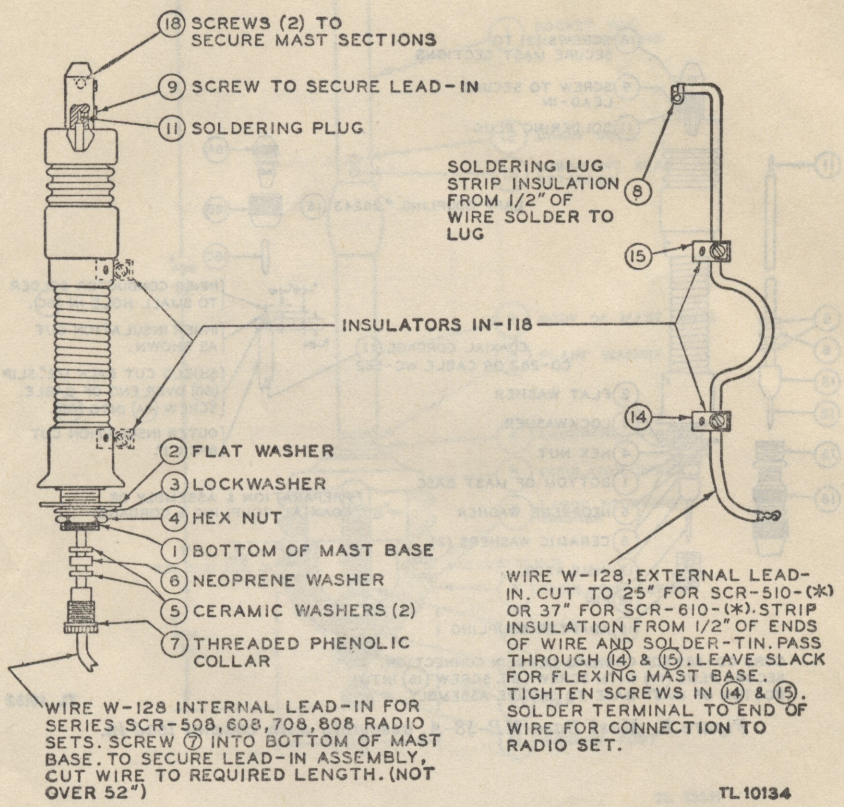

Figure 3. Mast Base MP-48-A, assembly with Wire W-128 lead-in.

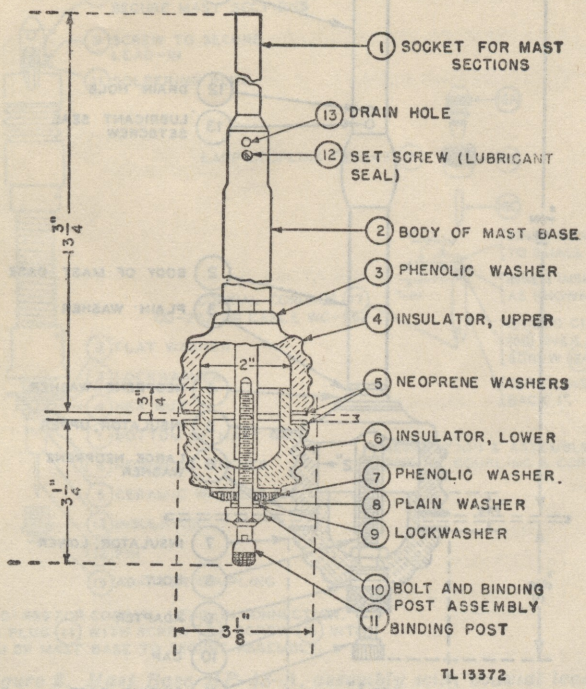

Figure 4. Mast Base MP-65-A, assembly for installation.

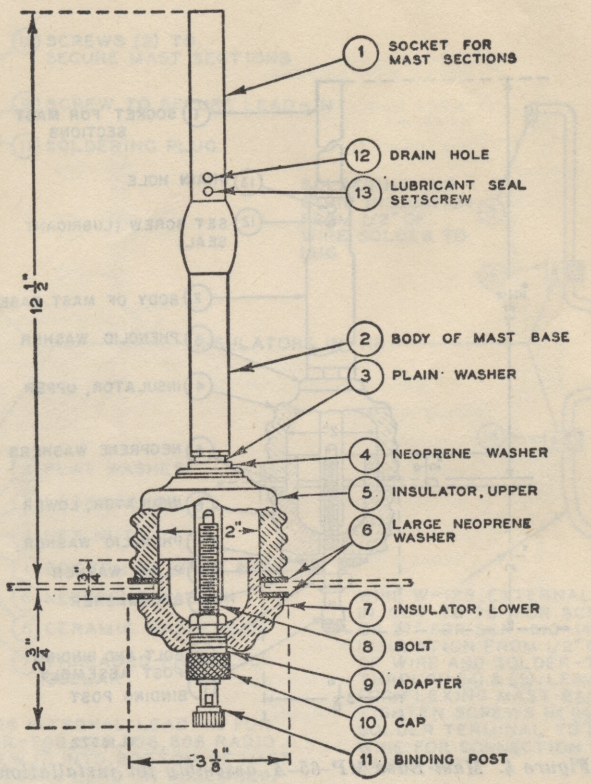

Figure 5. Mast Base AB-15/GR, assembly for Wire W-128 lead-in.

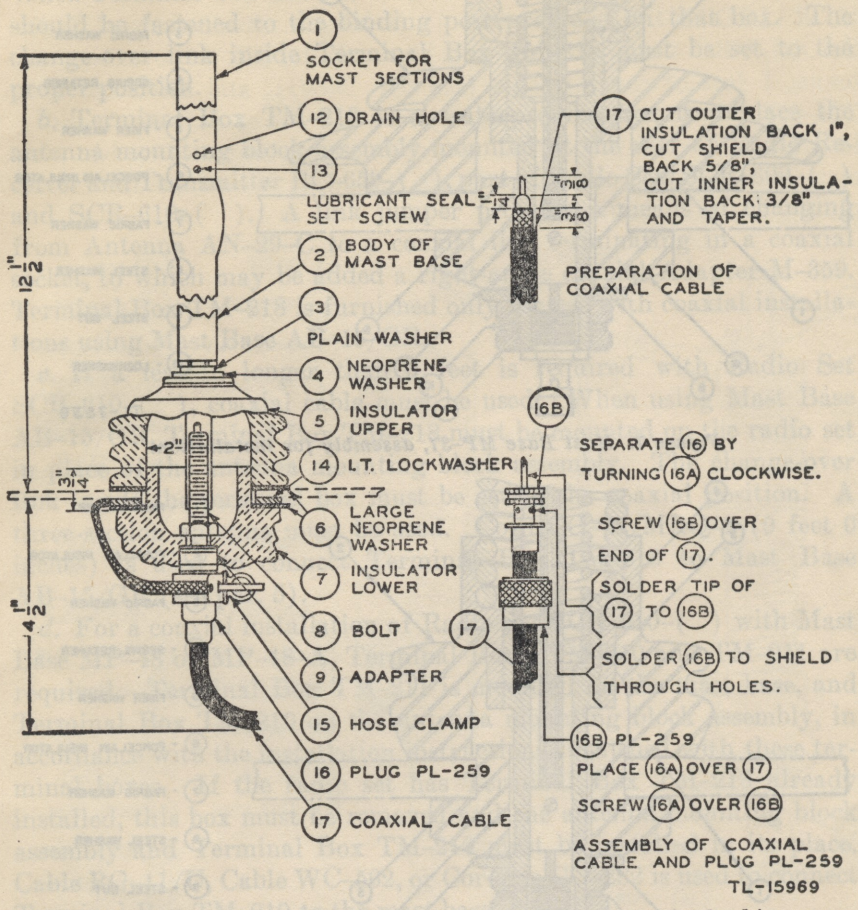

Figure 6. Mast Base AB-15/GR, assembly with coaxial lead-in.

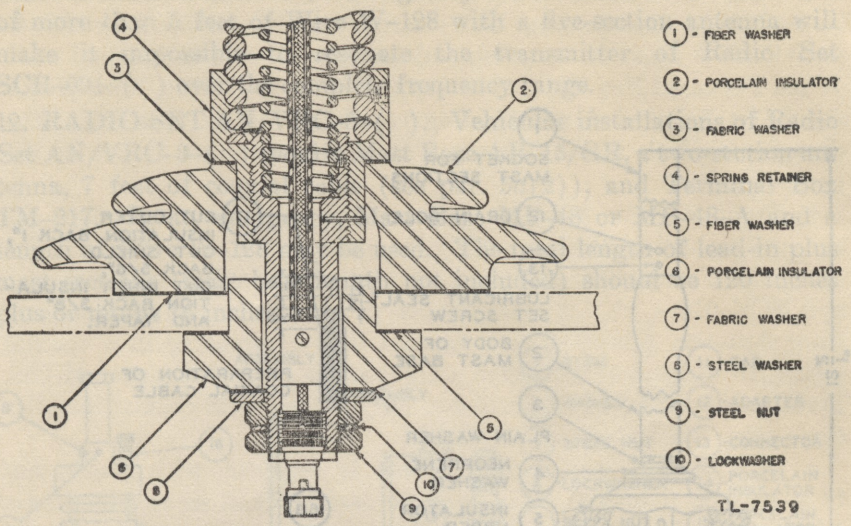

Figure 7. Mast Base MP-37, assembly for installation.

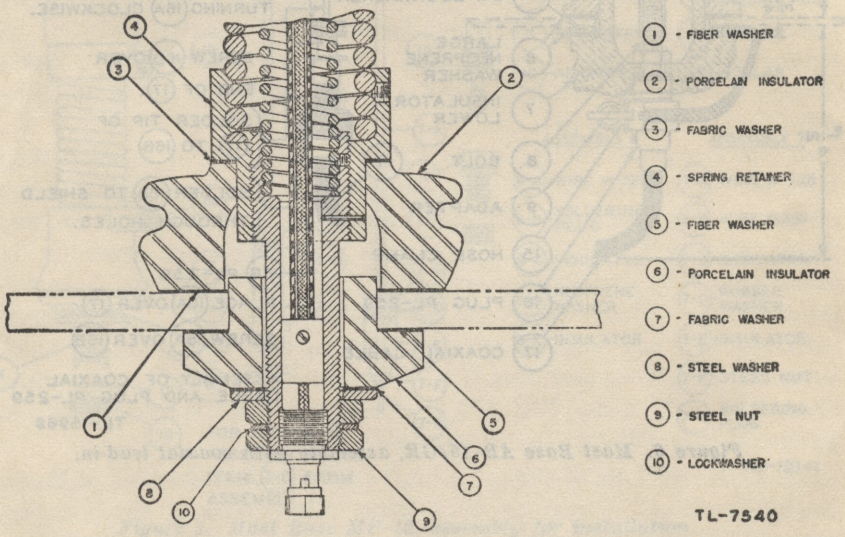

Figure 8. Mast Base MP-57, assembly for installation.

Table II. General standards for vehicular antenna installations

Radio Set	Installation requirement	Mast Base	Mast Sections	Lead-in	Notes
SCR-193-( )		MP-65 MP-65-A	3 ea MS-116 1 ea MS-117 1 ea MS-118	Wire W-128, 7′ maximum	Use lead-in as short as possible.
SCR-193-( )		MP-37 MP-57	1 ea MS-49 to MS-53, inclusive.	Wire W-128, 7′ maximum	Use lead-in as short as possible.
SCR-245-( )		MP-65 MP-65-A	3 ea MS-116 1 ea MS-117 1 ea MS-118	Wire W-128, 7′ maximum	Use lead-in as short as possible.
SCR-245-( )		MP-37 MP-57	1 ea MS-49 to MS-53, inclusive.	Wire W-128, 7′ maximum	Use lead-in as short as possible.
SCR-284-( )		MP-65 MP-65-A	3 ea MS-116 1 ea MS-117 1 ea MS-118	Wire W-128, or W-142, 8′ maximum	Use lead-in as short as possible.
SCR-284-( )		MP-37 MP-57	1 ea- MS-49 to MS-53, inclusive.	Wire W-128, or W-142, 8′ maximum	Use lead-in as short as possible.
SCR-506-( )		MP-65 MP-65-A	3 ea MS-116 1 ea MS-117 1 ea MS-118	Wire W-146, 7′ maximum	Use lead-in as short as possible. Wire W-128 may be used in emergency.
SCR-506-( )		MP-37 MP-57	1 ea MS-49 to MS-53, inclusive.	Wire W-146, 7′ maximum	Use lead-in as short as possible. Wire W-128 may be used in emergency.

Table II. General standards for vehicular antenna installations—Continued

Radio Set	Installation requirement	Mast Base	Mast Sections	Lead-in	Notes
SCR–508–( ), SCR–528–( ) and SCR–608–( ), SCR–628–( )	40″ lead - in maximum.	AB–15/GR	1 ea MS–116 1 ea MS–117 1 ea MS–118	Wire W – 128 40″ maximum	Wire W–128 is connected to the bottom binding post of Mast Base AB–15/GR.
SCR–508–( ), SCR–528–( ) and SCR–608–( ), SCR–628–( )	40″ lead-in maximum	MP–48 or MP–48–A	1 ea MS–51 1 ea MS–52 1 ea MS–53	Wire W–128	40″ maximum when connected to external terminal of Mast Base MP–48–A, top or bottom binding post of Mast Base MP–48. 52″ maximum when Wire W–128 is fed through Mast Base MP–48 in absence of bottom post or through Mast Base MP–48–A.
SCR–508–( ), SCR–528–( ) and SCR–608–( ), SCR–628–( )	Mast Base Bracket MP–52 on Cabinet CH–74–( )	AB–15/GR	1 ea MS–117 1 ea MS–118	Wire W–128	Installation requires 40″ lead-in when Mast Base Bracket MP–52 is mounted on left side of Cabinet CH–74–( ), 46″ lead-in when Mast Base Bracket MP–52 is mounted on right side of Cabinet CH–74–( ).
SCR–508–( ), SCR–528–( ) and SCR–608–( ), SCR–628–( )	Mast Base Bracket MP–52 on Cabinet CH–74–( )	MP–48 or MP–48–A	1 ea MS–52 1 ea MS–53	Wire W–128	Installation requires 52″ lead-in when Mast Base Bracket MP–52 is mounted on left side of Cabinet CH–74–( ), 58″ lead-in when Mast Base Bracket MP–52 is mounted on right side of Cabinet CH–74–( ). (Includes length of wire inside Mast Base MP–48 or MP–48–A.)
SCR–508–( ), SCR–528–( ) and SCR–608–( ), SCR–628–( )	Over 40″ of lead-in	AB–15/GR	1 ea MS–116 1 ea MS–117 1 ea MS–118	Cable RG–11/U, Cable WC–562 or Cordage CO–282	Radio Sets SCR–508–( ), 528–( ), 8′ minimum, 10′ maximum, Radio Sets SCR 608–( ), 628–( ), 6′ minimum, 8′ maximum, Plug PL–259 required at mast base end of cable.

SCR–508–( ), SCR–528–( ) and SCR–608–( ), SCR–628–( )	Over 40″ of lead-in	MP–48 or MP–48–A	1 ea MS–51 1 ea MS–52 1 ea MS–53	Cable RG–11/U, Cable WC–562 or Cordage CO–282	Radio Sets SCR–508–( ), 528–( ), 8′ minimum, 10′ maximum, Radio Sets SCR–608–( ), 628–( ), 6′ minimum, 8′ maximum, connector, item 13, fig. 1, required at mast base end of cable. Cord CD–689 required with Mast Base MP–48–A.
SCR–510–( )	2′ lead-in	AB–15/GR	1 ea MS–117 1 ea MS–118	2′ Wire W–128	Emergency installations may use up to 36″.
SCR–510–( )	2′ lead-in	MP–48 or MP–48–A	1 ea MS–52 1 ea MS–53	2′ Wire W–128	Remove internal lead-in from mast base and use upper external terminal. Emergency installations may use up to 36″.
SCR–510–( )	Over 2′ of lead-in	AB–15/GR	1 ea MS–116 1 ea MS–117 1 ea MS–118	Cord CG–67/-MRQ–2 (9′0″)	Terminal Box TM–206–A required at radio set. In an emergency, Terminal Box TM–206 may be used with Cord CD–1297 (9′0″).
SCR–510–( )	Over 2′ of lead-in	MP–48 or MP–48–A	1 ea MS–51 1 ea MS–52 1 ea MS–53	Cord CD–1297 (9′0″)	Terminal Box TM–206–A required at radio set. Cord CD–689 required with MP–48–A. In an emergency Terminal Box TM–206 may be used with Cord CD–636.
SCR–610–( )	3′ lead-in	AB–15/GR	1 ea MS–116 1 ea MS–117 1 ea MS–118	3′ Wire W–128	Length of lead-in is critical. Use 3′ plus or minus 1″.
SCR–610–( )	3′ lead-in	MP–48 or MP–48–A	1 ea MS–51 1 ea MS–52 1 ea MS–53	3′ Wire W–128	Length of lead-in is critical. Use 3′ plus or minus 1″. Remove internal lead-in from mast base and use upper external terminal.
SCR–610–( )	Over 3′ of lead-in	AB–15/GR	1 ea MS–116 1 ea MS–117 1 ea MS–118	Cord CG–67/-MRQ–2 (9′0″)	Terminal Box TM–218 required at radio set.

Table II. General standards for vehicular antenna installations—Continued

Radio Set	Installation requirement	Mast Base	Mast Sections	Lead-in	Notes
SCR-610-( )	Over 3′ of lead-in	MP-48 or MP-48-A	1 ea MS-51 1 ea MS-52 1 ea MS-53	Cable RG-11/U, Cable WC-562 or Cordage CO-282, 4′ to 10′	Terminal Box TM-210 required on radio set. Terminal Box TM-211 required on mast base. Cord CD-689 required with Mast Base MP-48-A.
SCR-619-( )	All vehicular installations	AB-15/GR	1 ea MS-116 1 ea MS-117 1 ea MS-118	Cord CG-67/M-RQ-2 (9′0″)	Terminal Box J-72/GR required at mast base.
SCR-694-( )	All vehicular installations	MP-65 MP-65-A	3 ea MS-116 1 ea MS-117 1 ea MS-118	Wire W-128, 5′ maximum	Use lead-in as short as possible.
AN/VRC-3	All vehicular installations	AB-15/GR	1 ea MS-117 1 ea MS-118	Cord CG-102/-TRC-7 (7′0″)	Terminal Box TM-217 required at radio set. Mast Base MP-48 or MP-48-A with Wire W-128 may be used in an emergency, but total length lead-in plus mast sections should be 120″ plus or minus 16″.

[AG 300.5 (2 Jan 45)]

BY ORDER OF THE SECRETARY OF WAR:

G. C. MARSHALL
Chief of Staff

OFFICIAL:
J. A. ULIO
Major General
The Adjutant General

DISTRIBUTION:

AAF (5); AGF (5); ASF (2); T of Opns (5) except CBI (25); Dept (5); Def Comd (2); Base Comd (5); AAF Comd (2); Arm & Sv Bd (2); WDGS Lib (5); S Div ASF (1); Tech Sv (2); SvC (5); Area ASvC (5); PC&S (2); PE (2); ASF Dep (Sig Sec) (2); Dep & Sub-Dep 1 (Sig Sec) (2); AGF Repl Dep (Sig Sec) (2); Gen Oversea SOS Dep (Sig Sec) (10); Dep 11 (10); Pro Dist 11 (2); GH (2); M Conc C (2); Air Base H (2); Insp Z 11 (2); Gen & Sp Sv Sch (5); USMA (2); ROTC (5); Lab 11 (2); Sig AS (2); Rep Sh 11 (2); A (5); CHQ (5); D (2); AF (2).

Three copies to the following: T/O & E 1–317; 1–452T; 1–618; 1–977; 1–987; 2–22; 2–25; 2–26; 2–27; 2–28; 3–25; 3–27; 3–267; 4–50–1–S; 4–276; 4–277; 4–278; 5–16; 5–17; 5–192; 5–215; 5–216; 5–217; 5–218; 5–226; 5–276; 5–416; 5–417; 5–456; 5–476; 5–476T; 5–512S; 5–516S; 5–517S; 5–526S; 5–627; 6–10–1; 6–12; 6–20–1; 6–26; 6–29; 6–36; 6–39; 6–50–1; 6–56; 6–57; 6–59; 6–67; 6–76; 6–77; 6–78S; 6–97; 6–126; 6–127; 6–129; 6–156; 6–157; 6–160–1; 6–166; 6–167; 6–169; 6–176; 6–177; 6–197; 6–200–1; 6–212S; 6–216; 6–217; 6–218; 6–226; 6–227; 6–270–1T; 6–277T; 6–327; 6–329; 6–337; 6–339; 6–357; 6–359; 6–367; 6–397; 7–12; 7–16; 7–19; 7–22; 7–23; 7–25; 7–26; 7–27; 7–29; 7–52; 7–86; 7–96; 7–416; 8–76; 8–77; 9–65; 9–66; 9–67; 10–36; 10–37; 11–7; 11–7S; 11–15; 11–18; 11–25; 11–47; 11–57; 11–87S; 11–95; 11–97; 11–107; 11–127; 11–147S; 11–237; 11–257; 11–287; 11–537S; 11–557; 11–577T; 11–587; 11–592; 11–597; 11–677S; 17–15; 17–16; 17–17; 17–19; 17–20–1; 17–22; 17–25; 17–26; 17–27; 17–29; 17–37; 17–45S; 17–46S; 17–47S; 17–49S; 17–56; 17–57; 17–60–1; 17–97S; 17–115; 17–116; 17–117; 17–125; 17–126; 17–127; 18–10–1; 18–25; 18–26; 18–27; 18–28; 18–36; 18–37; 19–56; 19–57; 19–97: 44–76; 44–77; 44–138; 44–326; 44–327; 44–476T; 44–477T; 55–37; 71–10–1S

For explanation of symbols, see FM 21–6.

U. S. GOVERNMENT PRINTING OFFICE: 1945